FORM 1

612078

SPRUSON & FERGUSON

**COMMONWEALTH OF AUSTRALIA**

**PATENTS ACT 1952**

**APPLICATION FOR A STANDARD PATENT**

American Telephone and Telegraph Company, incorporated in New York, of 550 Madison Avenue, New York, New York, 10022, UNITED STATES OF AMERICA, hereby apply for the grant of a standard patent for an invention entitled:

EMI Reducing Circuit Card Apparatus and Related Methods

which is described in the accompanying complete specification.

Details of basic application(s):-

| Basic Applic. No: | Country: | Application Date: |
|---|---|---|
| 352,795 | US | 16 May 1989 |

The address for service is:-

**Spruson & Ferguson**
Patent Attorneys
Level 33 St Martins Tower
31 Market Street
Sydney New South Wales Australia

DATED this FIFTEENTH day of MAY 1990

American Telephone and Telegraph Company

By: 

Registered Patent Attorney

TO: THE COMMISSIONER OF PATENTS
OUR REF: 128041
S&F CODE: 63845

5014824 15/05/90

5845/3

FORM 8

COMMONWEALTH OF AUSTRALIA

PATENTS ACT 1952-69

DECLARATION IN SUPPORT OF A CONVENTION APPLICATION FOR A PATENT

In support of the Convention application made for a patent for an invention entitled: EMI REDUCING CIRCUIT CARD APPARATUS AND RELATED METHODS

I, Kenneth Graham Johnston of 30 Branscombe Gardens, Winchmore Hill, London N21 3BN, England,

do solemnly and sincerely declare as follows:

1. I am authorized by American Telephone and Telegraph Company, the applicant for the patent to make this declaration on their behalf.

2. The basic application(~~s~~) as defined by Section 141 of the Act was made in the United States of America on the 16th day of May 1989 by KINHQUOC NGUYENNGOC.

3. Kinhquoc Nguyenngoc, 14 Seymour Street, Montclair, New Jersey 07042, United States of America

is the actual inventor of the invention and the fact upon which American Telephone and Telegraph Company is entitled to make the application is as follows:

The said Company is the assignee of the actual inventor(~~s~~).

4. The basic application referred to in paragraph 2 of this declaration was the first application made in a Convention country in respect of the invention the subject of the application.

Declared at LONDON

this 16th day of April 1990

K G Johnston

Declarant

To: The Commissioner of Patents.

(12) PATENT ABRIDGMENT (11) Document No. AU-B-55062/90
(19) AUSTRALIAN PATENT OFFICE (10) Acceptance No. 612078

(54) Title
**EMI REDUCING CIRCUIT CARD APPARATUS AND RELATED METHODS**

International Patent Classification(s)
(51)[5] **H05K 009/00**

(21) Application No. : **55062/90** (22) Application Date : **15.05.90**

(30) Priority Data

| (31) Number | (32) Date | (33) Country |
|---|---|---|
| **352795** | **16.05.89** | **US UNITED STATES OF AMERICA** |

(43) Publication Date : **29.11.90**

(44) Publication Date of Accepted Application : **27.06.91**

(71) Applicant(s)
**AMERICAN TELEPHONE AND TELEGRAPH COMPANY**

(72) Inventor(s)
**KINHQUOC NGUYENNGOC**

(74) Attorney or Agent
**SPRUSON & FERGUSON , GPO Box 3898, SYDNEY NSW 2001**

(56) Prior Art Documents
**EP 59861**
**EP 196555**
**US 4762966**

(57) Claim

1. A device for reducing electromagnetic interference from equipment with a bay having guideways (44) therein for holding circuit cards (60) at predetermined locations in said bay, and having a front opening around which an a.c. circuit path (160) extends in a closed loop, said device comprising a contact support unit (60) having a front (73) and a rear (74), and adapted to be inserted, rear first, through such opening into said guideways to be held in position in said bay at one of such locations, and said device being CHARACTERIZED BY a pair of resilient electric contacts (121,122) spaced from each other at the front of and on opposite sides of said unit and each having a rearward electrical contact surface, and adapted, when said unit is so inserted, to engage respective ones of two contact regions (59,59) having respective forward facing electrical contact surfaces and electrically coupled with separate parts of said loop and to thereby be each resiliently deflected so as to make pressure electric contacts with said regions, and said device being further structurally CHARACTERIZED BY an electrical coupling together of both said resilient contacts, said resilient contacts and said coupling together thereof being adapted upon the making of such pressure contacts to complete a shunt a.c. circuit path (120) between such loop parts.

2. A device as in claim 1 in which said contact support unit

.../2

is a circuit card comprising an insulation board having at its front (73) a laterally extending front edge face and a pair of laterally spaced parallel margins (71,72) therefor longitudinally extending between said face and the rear (74) of said board, said board has thereon electronic circuitry distributed over said board to leave thereon at its margins a pair of border strips which are both bare of said circuitry and are contiguous with the portion of the board laterally between such strips at inner boundaries of such strips of which each boundary is respective to a corresponding one of said strips and is laterally inwards of the board margin at which that strip is located, and in which said device is CHARACTERIZED IN THAT at least respective portions of said two resilient contacts are disposed on laterally opposite sides of said card laterally outwards of the inner boundaries of said border strips.

612078

S & F Ref: 128041

FORM 10

COMMONWEALTH OF AUSTRALIA

PATENTS ACT 1952

COMPLETE SPECIFICATION

(ORIGINAL)

FOR OFFICE USE:

Class Int Class

Complete Specification Lodged:
Accepted:
Published:

Priority:

Related Art:

---

Name and Address of Applicant: American Telephone and Telegraph Company
550 Madison Avenue
New York New York 10022
UNITED STATES OF AMERICA

Address for Service: Spruson & Ferguson, Patent Attorneys
Level 33 St Martins Tower, 31 Market Street
Sydney, New South Wales, 2000, Australia

Complete Specification for the invention entitled:

EMI Reducing Circuit Card Apparatus and Related Methods

The following statement is a full description of this invention, including the best method of performing it known to me/us

5845/4

# EMI REDUCING CIRCUIT CARD APPARATUS AND RELATED METHODS

## Technical Field of the Invention

This invention relates generally to apparatus which constitutes a circuit card or which utilizes circuit cards. More particularly, this invention relates to apparatus of such kind adapted to reduce electromagnetic interference.

## Background of the Invention

Many electrical systems and equipment are characterized in use by the radiation therefrom of extraneous electromagnetic wave energy generated as an incident to the operation thereof. Such systems and equipment run the gamut from, say, power lines (60 cycle hum) to, say, microwave wave ovens (microwave energy leakage), and the frequencies of such radiated extraneous waves are distributed over a correspondingly broad spectrum. The presence in the environment of radiated energy of such sort is generally undesirable because it is a form of "noise," and because it may adversely affect the operation of other electrical or electronic systems and equipment in the vicinity of the source of its emanation. Accordingly, that kind of emitted electromagnetic wave energy is referred to as electromagnetic interference or, as abbreviated, "EMI."

With the advent of telecommunications and computing equipment which employ digital techniques and clock pulses having a high repetition frequency, the problem of EMI emission therefrom has become troublesome to the extent that the Federal Communications Commission has promulgated regulations providing that the EMI radiation from such equipment must not exceed certain prescribed maximum permissible levels. A further characteristic of such equipment is that it employs as plug-in components a large number of circuit cards and (as described in the article entitled "Modeling Electromagnetic Interference Properties of Printed Circuit Boards," by Clayton R. Paul, published on pages 33-50 of the January 1989 issue of the IBM Journal of Research and Development, the boards of those cards are rich sources of EMI. Consequently, there is a need for means to reduce the EMI emitted by this equipment and originated from the cards therein to the point where such interference is less by a safe margin than the maximum permissible level specified therefor by the FCC and, preferably, is far enough below that level to assure that it will not be exceeded in any foreseeable circumstance of practical use of the equipment.

AUSTRALIAN PATENT OFFICE

In equipment of the kind considered which employs circuit cards as components thereof, the cards are commonly retained in the equipment in bays which are spaces between shelves included in the equipment. Each such bay is bounded at its top and bottom by upper and lower ones of such shelves, at its rear by a backplane, and at horizontally opposite ends of such rear, by vertical sidewalls extending from the rear to the front of the bay. Each such bay is, moreover, open at its front and has a front opening in the shape of a rectangle of greater horizontal then vertical dimension. The one or more bays of such equipment each normally contain a bank of circuit cards inserted into the bay from its front and retained in the bay such that the cards in the bank are vertical and in side-to-side stacked relation. When such cards are included in telecommunications equipment wherein each card serves a communications channel or channels respective thereto, such a bank is called a "channel bank." Here, however, such a bank will be referred to more generically as a card bank or circuit card bank.

When the described circuit card apparatus is operating, electromagnetic wave energy originally generated by circuit cards in a bay escapes as radiation from that bay into the exterior environment through the bay's rectangular front opening which is bordered around it periphery by a closed-loop, a.c. electrical circuit path. In those circumstances, the front opening acts as a slot antenna for such radiation. It is an empirical rule for such a slot antenna that it is a good radiator only of electromagnetic waves shorter in wavelength than the larger of the two dimensions of the rectangular opening, the slot antenna tending to suppress radiation of larger wavelength. It follows from such a rule that, if EMI escaping from the circuit cards into the bay is distributed fairly evenly over the frequency spectrum, a decrease in the size of such larger dimension will produce a decrease in the EMI "wattage" radiated out through such front opening to the exterior.

As another empirical rule, however, it is only a reducing of the larger of the two dimensions of the front opening which will be primarily effective in reducing the EMI power radiated through the opening. To put it another way, if the larger dimension is kept constant and the smaller dimension is reduced in size, the radiated EMI power will not be relatively reduced by anywhere near the amount as the reduction in radiated EMI power effected by reducing the larger opening dimension. Consequently, an aperture at the front of the bay which is narrow but of the full length of the bay (as, say, an interstitial gap between the housing surrounding the front of the bay and the edge of a cover closure for the bay) will, despite its small

width, permit an undesirably large amount of EMI to escape from the bay to the exterior.

U.S. Patent 4,762,966, issued August 9, 1988, in the name of David E. Kosanda, to Rockwell International Corporation, proposes to reduce EMI escaping from a space within a box for containing circuit cards by providing a cover for the front of such space so that it is closed at top and bottom except for narrow interstitial gaps left between the top and bottom edges of the cover and adjacent portions of the box, and by providing for such gaps what is referred to in the patent as an "EMI gasket." That gasket comprises for each such gap a plurality of resilient metallic fingers on the cover and disposed on its edge on the outer side of such gap to be spaced from each other in the gap's length and to project forwardly from the cover towards the portion of the box which is on the gap's inner side. When the cover is attached to the box (in some way not disclosed by Kosanda), the forward ends of the fingers are described by the patent as being forced back towards the edge of the cover or panel, during which time electrical contact is maintained between the cover and the box, and the spacing between the various fingers for the top and bottom gaps "is such that signal frequencies of lower than a given frequency cannot pass through the opening."

The EMI reducing scheme proposed by Kosanda (to the extent it is understood from the disclosure of that patent) has, however, the disadvantages, among others, that the cover contemplated thereby is an additional item of expense for the circuit card containing apparatus, hides from view the faceplates of the circuit cards inserted in the box (and thus precludes any casual visual inspection of those faceplates and any associated indicating devices), must be opened or removed each time a card is to be added to or removed from the bank thereof in the box, and takes up space at the front of the box.

**Summary of the Invention**

The above-described disadvantages of the Kosanda arrangement are obviated according to the invention in connection with equipment having one or more bays each having top and bottom guideways therein for holding circuit cards at predetermined locations in the bay, and each such bay having a front opening around which an a.c. circuit path extends in a closed loop. A lowering of the EMI from any such bay is capable of being realized according to the invention by a device comprising a contact support unit having a front and rear and adapted to be inserted, rear first, through such opening into top and bottom areas of such guideways to be held in position in such bay at one of said locations therefor, such device being

characterized by a pair of resilient electric contacts spaced from each other at the front of and on opposite sides of such unit and adapted when such unit is so inserted to engage respective areas of two contact regions electrically coupled with separate parts of such loop and, by such engagement, to each be resiliently deflected so as to make pressure electric contact with said regions, and said device being further characterized by an electrical coupling together of both such resilient contacts, said resilient contacts and such coupling together thereof being adapted upon the making of such pressure contacts to complete a shunt a.c. circuit path between such loop parts.

While the invention will be described in terms of an exemplary embodiment in the form of subscriber loop carrier equipment used in telecommunications, it will be appreciated that the invention is applicable to any electronic equipment having one or more bays for the insertion therein of circuit cards.

**Brief Description of the Drawing**

For a better understanding of the invention, reference is made to the following description of representative embodiments thereof and to the accompanying drawings wherein:

FIG. 1 is a schematic isometric view of a part of subscriber loop carrier equipment, and of an EMI reducing circuit card included in such equipment;

FIG. 2 is a schematic front elevation of the FIG. 1 equipment showing two bays thereof and a plurality of circuit cards in one of such bays;

FIG. 3 is a front elevation of the circuit card of FIG. 1 and of portions adjacent such card of the FIG. 1 equipment;

FIG. 4 is a left side elevation of the FIG. 3 circuit card and of portions of the FIG. 1 equipment adjacent such card, some of such portions being viewed in cross section as indicated by the arrows 4-4 in FIG. 3, and the card being partially inserted into the holding bay therefor in the equipment;

FIG. 5 is a rear elevation in cross section, taken as indicated by the arrows 5-5 in FIG. 4 of the FIG. 3 card;

FIG. 6 is a rear elevation of the resilient clip component of the FIG. 3 card;

FIG. 7 is a right side elevation of the faceplate component of the FIG. 3 card;

FIG. 8 is an enlarged schematic view in cross section of a mode for fastening the FIG. 6 clip to the FIG. 7 faceplate;

FIG. 9 is an enlarged schematic view in cross section of the results of the practice of the fastening method depicted in FIG. 8;

FIG. 10 is a right side elevation of the front end, broken away, of the FIG. 3 card and of regions, shown in cross section, belonging to the designation strips of the FIG. 1 equipment and making contacts with the resilient ends of the FIG. 6 clip of the FIG. 3 card; and

FIGS. 11-13 are schematic electrical diagrams showing the effect of the contacts depicted in FIG. 10 on a circuit path at the front of the FIG. 1 equipment.

**Detailed Description of Exemplary Embodiments of the Invention**

Referring now to FIGS. 1 and 2, the reference numeral 20 designates circuit card apparatus in the form of subscriber loop carrier equipment 20 comprising vertically spaced metallic shelves 21, 22, 23 within a housing 24 provided by a rear backplane 25 and sheet metal side walls 26, 27 extending on either side of such shelves from the backplane to the front of the equipment. Housing 24 is grounded. The horizontal shelves 21-23 and the vertical elements 26-27 provide two bays 31 and 32 of which the lower bay 31 is defined between shelves 21 and 22 while upper bay 32 is defined between shelves 22 and 23. Subscriber loop carrier equipment such as unit 20 commonly consists of five of such bays. For economy of drawing, however, only two of them are shown.

Bay 31 is a space bounded at its bottom and top by the top and bottom surfaces of, respectively, shelves 21 and 22, at its rear by a portion of backplane 25, and at its sides by portions of the sidewalls 26, 27. Bay 32 is similarly bounded by shelves 22 and 23 and by other portions of such backplane and sidewalls.

The bays 31 and 32 are open at the front of equipment 20 and have respective rectangular front openings 35 and 36, each having a horizontal dimension greater than its vertical dimension. The function of the bays 31 and 32 is to provide receptacles for banks of circuit cards. One such card 60 is shown in FIG. 1 as partially inserted into bay 31. FIG. 2 depicts bay 31 as holding card 60 and an additional card 60′, while bay 32 is shown as being empty.

The shelves 21, 22 and 23, between which bays 31 and 32 are defined, are rectangular members which, for convenience, are shown as being solid, but which are ordinarily in the nature of perforated gratings. These shelves are attached to the housing 24 of equipment 20 by tap screws 40 passing at the rear and front of

sidewalls 26 and 27 through those walls into the vertical sides of such shelves. Since screws 40 are tap screws, they provide adjacent the front openings of bays 31 and 32 a gap-free electrical interconnection from the metal of the sidewalls, through the metal of the screws, to the metal of the shelves.

The shelves 21, 22 and 23 are formed to have paired columns 42 of ridges 43 vertically projecting from the top and bottom surfaces of each shelf and spaced in each such column in the front to rear direction of the shelf. The two columns of ridges in each pair are transversely spaced from each other to define between them a guideway 44, extending in the shelf's front to rear direction, for guiding and holding in place the top or bottom edge of a particular circuit card inserted into the associated bay. An exemplary pair of columns 42 of such ridges 43 with a guideway 44 therebetween is shown in FIG. 1 on the upper surface of shelf 22. The right hand one of a similar pair of columns 42′ of ridges 43′ is shown in the same figure on the upper surface of shelf 21, with the card 60 being partly inserted into the guideway 44′ defined between those two columns.

Mounted by the shelves 21, 22, 23 are three corresponding sheet metal designation strips 51, 52, 53 (FIG. 2) attached to the front sides of their respective shelves by tap screws 54 passing through the strips and into the metal of the shelves. In FIG. 2, the ends of strips 51, 52, 53 have been broken away to show the underlying shelves. Since screws 54 are tap screws, they provide, as before, an uninterrupted electrical connection from the metal of the strips through the metal of the screws to the metal of the shelves.

Each of the designation strips has formed in both its top and bottom edges a sequence of notches (FIGS. 2 and 3) spaced from each other in the transverse length of the strip. Certain of these notches are aligned with the card guideways 44 defined on the top and bottom surfaces of the shelves. Those notches serve accordingly as card entry notches 55, permitting a particular card 60 to be inserted through that notch into a guideway 44 in one of the bays. There is a card entry notch for both the top margin and the bottom margin of each card.

The card entry notches 55 may alternate in the length of a strip with other notches 56 which are keyway notches adapted to cooperate with "keys" provided on the circuit cards 60 for equipment 20 to prevent any particular circuit card from being fully inserted into a bay of the equipment at any location other than the one at which the card should be received.

The outer surfaces of the designation strips 51, 52, 53 are for the most part covered with a coating 57 of enamel or other insulating material. At the top and bottom of each such strip, however, there are narrow marginal bands 58 of the strips' outer surface which are free of enamel and are primarily metallic and overlie metallic contact regions 59 adjacent each card entry notch 55. If strips 51, 52, 53 are made of a non-oxidizing material such as stainless steel, contact regions 59 can have bare metal surfaces. Alternatively, the surface areas exposed within bands 58 need not be bare metal but, rather, can be covered with a thin film of material which inhibits oxidation of the underlying metal (which may be, say, aluminum) and which may be, for example, the material IRIDITE® available from the Witco Corporation, 520 Madison Avenue, New York, NY. Such thin film provides so little impedance to the passage of high-frequency electrical current therethrough that, practically speaking, the bands 58 and contact regions 59 can be considered to have metallic surface areas.

The circuit card 60 is shown in FIG. 4 (as in FIG. 1) partly inserted into the bay 31 defined between shelves 21 and 22. Card 60 comprises a generally rectangular board 70 of insulative material having laterally spaced top and bottom margins 71 and 72 extending longitudinally from an edge face 73 at the front of the board to the board's rear area 74. The surface seen in FIG. 4 of that rear area has thereon an array of metallic contact pads 75 (only two shown) adapted when card 60 is fully inserted into bay 31 to be received in an edge connector 76 to make electrical contacts therein with corresponding contacts (not shown) in the connector 76.

The board 70 is a printed wiring board ("PWB") having thereon (on its side seen in FIG. 4) circuitry comprising the mentioned pads 75, printed wiring (not shown), and various discrete electrical components, including an indicating, light-emitting diode 77 and a test jack 78. The components 77 and 78 are mounted on board 70 to partly project beyond the front edge face 73 of the board. While the circuitry of the board is distributed over most of its area on its side seen in FIG. 4, the board at its top and bottom is characterized on its surface on both of its sides by narrow longitudinal border strips 79,80, whose inner boundaries are marked by dot-dash lines 21,22. Within those border strips 79,80, the board is free of any projecting circuitry on its surface. The purpose of having such border strips is to permit the board to fit within the entry notches 55 and guideways 44 provided therefor so that the board can be fully inserted into bay 31.

At the front of board 70 is a laterally (i.e., vertically) elongated, generally rectangular, insulative faceplate 90 which is relatively narrow in its transverse (i.e., horizontal) dimension, and which is disposed relative to board 70 such that the centerplanes of the two vertical elements 70 and 90 are at right angles to each other. As shown, the faceplate 90 laterally extends between bottom and top end portions 91 and 92 thereof which are laterally outwards of the top and bottom margins 71 and 72 of the board 70.

Faceplate 90 is composed of synthetic resinous material and is molded from such material so as to have various parts which are integral with the plate, and of which some will now be described.

On its back side, the plate 90 has a pair of plastic bosses 93, 94 projecting rearwardly from the main body of the plate. Metal screws 95, 96 pass from the far side (not seen in FIG. 4) of board 70 through holes therein and then into the bosses 93, 94 to fasten plate 90 to and in fixed relation with board 70.

Disposed above and in transversely displaced relation with boss 93 is a columnar plastic key 97 projecting rearwardly from the main part of plate 90. Key 97 is adapted to fit into the particular keyway 56 which is associated in designation strip 52 with the entry notch 55 at the particular location in the transverse length of bay 31 at which the particular card 60 which is shown is to be inserted into that bay. Key 97 is so shaped and sized and positioned on faceplate 90 that the key will not fit into any other of the keyways 56 formed on strip 51. The key 97 thus prevents inadvertent full insertion of card 60 into bay 31 at a place where the card does not belong.

The plate 90 has formed therein by its molding a small aperture 101 and a large aperture 102 extending through the plate from rear to front and in which are respectively received the LED 77 and the test jack 78. LED 77 does not pass all the way through the plate but can be viewed from outside the plate at its front to determine if the LED is "on" or "off." Test jack 78 passes all the way through plate 90 to project beyond it.

Plate 90 has formed in its lower right hand outside corner (FIG. 3) a laterally elongated indentation 105 providing for passage through the plate of parts of a plastic latch handle 106 pivotally mounted (by a hollow rivet 108) on board 70 at its lower front corner (FIG. 4). Latch handle 106 is shown in FIG. 4 as rotated fully counterclockwise to its latching position at which a resiliently deflectable pawl arm 109 is inserted into a recess 110 formed in the front end of board to engage in

that recess with a tooth 111 holding the latch handle in latching position so long as the tooth is engaged by the pawl.

In order to fully insert card 60 into bay 31, the back of pawl 109 is pressed down to disengage its front from tooth 111. Latch handle 108 is then rotated clockwise to raise a finger 115 at the bottom of the latch above the top of designation strip 51, and the card is then pushed into the bay to cause the forward part of the finger to pass by the strip. Latch handle 106 is then rotated counterclockwise to produce reengagement of pawl 109 and tooth 111. In the course of such counterclockwise rotation of the handle, the forward part of finger 115 passes through an aperture 116 in shelf 21, and the finger's inner side then hooks around a bar section 117 provided by the shelf so that the reengagement of elements 109 and 111 causes the card 60 to be locked in bay 31 in fixed position relative to the shelves 21, 22 and the designation strips 51, 52. The card may thereafter be removed from the bay by disengaging pawl 109 from tooth 111 and rotating latch 106 counterclockwise as before described, and then pulling the card out.

Considering now the EMI reducing features of the described equipment, the card 60 has thereon an electroconductive shunting means disposed at the front of board 70 and the rear of faceplate 90 and comprising a pair of spaced, resiliently deflectable contact means and circuit means bridging such pair of means and electrically coupling them together. That shunting means may be conveniently provided by an elongated sheet metal strip 120 (FIG. 6), say, 5-10 mils thick, constructed of a metallic material which is resilient and a good conductor of electricity, and which material may be, for example, but without limitation, stainless steel, phosphor bronze or beryllium copper. Strip 120 has bottom and top end portions 121 and 122 which serve as electrical spring contacts, and, adjacent the inner ends of these portions, the strip has holes 123, 124 therethrough. Those holes are laterally spaced apart by the same distance as separates a pair of laterally spaced plastic studs 125, 126 projecting outwardly and rearwardly (FIG. 7) from the main body of faceplate 90.

The strip 120 is fastened to the back side of plate by heat staking in a manner as follows. Studs 125, 126 are passed through the holes 123, 124 in strip 120, and the strip is advanced towards the back side of plate 90 until it lies flat against that side with the free ends of the studs projecting outwards of the outside of the strip. An ultrasonic horn 130 (FIG. 8) is then applied forcibly to the projecting free end of stud 125 to melt its plastic material by ultrasonic energy, and to convert that free end into an expanded locking head 131 (FIG. 8) which rivets the region of

strip 120 around hole 123 to the back of the plastic plate 90. Similar application (not shown) of horn 130 to the free end of stud 126 converts that free end into an expanded head 132 similarly riveting the region of strip 120 around hole 124 to the faceplate.

The electrical contacts provided by strip 120 are in the form of resilient metal blades having respective anchored inner ends 141, 142 adjacent the locking heads 131, 132, and respective free ends 143, 144 disposed laterally outwards of the inner boundaries 81, 82 of border strips 79, 80 on PWB 70. As shown, they may also lie laterally outwards of the outer margins 71, 72 of those strips. Those contacts 121, 122 are disposed so that when in their resiliently unstressed condition, they slant outwardly and rearwardly from their anchored ends 141, 142 to their free ends 143, 144, which latter ends are, accordingly, longitudinally displaced rearwardly from the back surface of the faceplate 90. The end portions 91 and 92 of the faceplate extend in the lateral dimension outwards of the free ends 143, 144 of the contacts 121, 122. That faceplate, therefore, provides a backing for those contacts over the full length of each.

The contacts 121 and 122 are electrically coupled together by circuit means in the form of a flat segment 150 of strip 120, such segment 150 extending from one to two other of the anchored ends 141, 142 of those contacts. As best shown in FIG. 6, segment 150 has an irregular shape and, as will be evident from a comparison of FIGS. 5 and 6, the reason why it has such shape is to permit the segment to stretch between the contacts 91 and 92 in proximate relation to the back side of faceplate 90 while concurrently providing for avoidance by the segment of key 97 and the bosses 93, 94 and of the rear openings of the faceplate apertures 101 and 102, and for avoidance thereby of blockage by the segment of passage into such apertures 101 and 102 of, respectively, the LED 77 and the test jack 78, both mounted on the PWB 70.

The circuit card 60′ has circuitry on its PWB which differs in layout and composition from the circuitry on the board 70 of card 60. Otherwise, the card 60′ is similar in structural makeup to card 60. Thus, the card 60′ includes an electroconductive strip alike in size, shape and mounting thereof to strip 120 on card 60, and the card 60′ also includes an indicating LED and a test jack alike to elements 77, 78 on card 60 and received like those elements in apertures in the insulative faceplate of card 60′.

**Use and Operation of Embodiment**

Card 60 is used as follows to provide EMI reduction. In the course of insertion of the card into bay 31, the contacts 121, 122 of strip 120 are at first disengaged from any part of the extent of the metal housing 24 for that bay. As, however, such insertion proceeds by advancement of the card into the bay, the free ends 143, 144 of such contacts make respective initial contacts (FIG. 10) with the lower and upper designation strips 51 and 52 on that housing (FIG. 2) and, more particularly, with the metallic surfaced contact regions 59 provided on such strips (FIG. 3) adjacent to the entry notches 55 on such strips in which the top and bottom border strips 79, 80 of the PWB 70 are received. Because of such engagements between such contact regions 59 on the strip and the free ends of the contacts 121, 122 on the card, as the advancement of the card into the bay continues, such contacts are both resiliently deflected rearwardly so that the free ends 143, 144 of the contacts and the end portions 92, 92 of the faceplate 90 undergo relative movement towards each other to result in a progressive decrease in the spacing thereof. That deflection of the contacts 121, 122 (and the consequent stressing of these contacts) renders the engagements between them and the contact regions 59 on strips 51 and 52 a pressure engagement under yieldable force producing a firm and reliable electrical contact between the contacts on the card and such regions. Each such deflection of the contacts 121, 122 produces a minute wiping action which keeps the contacts clean.

When the insertion of the card 60 into the bay is completed (as earlier described) by manipulating latch handle 106 to hook its finger 115 around bar section 117 and to engage its pawl 109 with the tooth 111 on board 70 (FIG. 3), the resultant locking of the card in full forward position relative to the housing 24 serves to maintain these forcible engagements between the contacts 121, 122 on the card and the mentioned contact regions on the strips 51, 52 for so long as the card 60 remains so locked in position relative to equipment 20. When the card is in that latched position, the contacts 121, 122 therein have maximum deflection but still have some spacing from the end portions 91, 92 of the faceplate. Depending, however, on the interaction of latch handle 106 with the housing 117 and on other factors, the equipment 20 and card 60 can be designed so that the contacts 121, 122 will be deflected all the way back into flush contact with the faceplate's end portions 91, 92 which can in themselves be somewhat resiliently deflectable so as to be slightly bent rightwardly (FIG. 4) relative to the center of faceplate 90 as a result of locking of card 60 into place by manipulation of latch handle 106.

When the mentioned contact regions 59 on designation strips 51 and 52 are forcibly engaged as described by the contacts 121, 122, the strip 120 on card 60 provides a shunt path for a.c. electrical energy between these contact regions. These two contact regions 59 are in turn electrically coupled to a path for a.c. electrical energy which surrounds the periphery of the front opening 35 for bay 31, and which is schematically represented in FIG. 11 by the dot-dash line 160. The path 160 defines a single closed loop represented by the arrow 161. The loop of path 160 can be traced as extending (FIGS. 1, 2 and 3) from the contact region 59 of strip 51 engaged by contact 121, through that strip and the screws 54 in shelf 21 to the shelf; rightward in shelf 21, through the screws 40, attaching wall 26 to shelf 21, to that wall; upward through wall 26, and through screws 40, attaching that wall to shelf 22, into such shelf; leftward in shelf 22 (with which the contact regions 59 on strip 52 are coupled through screws 54) to and through the screws 40 on the left hand end of shelf 22; downward in wall 27 to and through the screws 40 passing into the left hand end of shelf 21; and then, through the screws 54 in that shelf into strip 51 and back to the place of beginning. Note that the contact regions 59 on the designation strips, those strips themselves and the associated screws 54 can be considered either as being in the loop 161 of path 160 or as being electrically coupled to separate parts of such loop. Note also that the metallic means comprising the members and elements traversed by path 160 are grounded as indicated in FIG. 11.

The diagram of FIG. 11 is relevant to a situation in which the bay 31 of equipment 20 has therein a full bank of circuit cards, none of which, however, is equipped with an electroconductive shunting means the same as or equivalent to the strip 120 earlier described. The circuit cards in that bank in their operation emit into bay 31 electromagnetic wave energy over a spectrum of wavelengths in circumstances in which there is only one area of front opening 35 encircled by a loop of an a.c. circuit path, namely, the full area of that opening encircled by loop 161. All of opening 35 acts as a single slot antenna 175 for radiating EMI constituted of such electromagnetic wave energy generated in bay 31. As earlier described, it is an empirical rule for such a slot antenna that it is a good radiator only of electromagnetic waves shorter in wavelength than the larger of the two dimensions of the slot, such larger dimension in the case of front opening 30 being its horizontal dimension. In the situation depicted in FIG. 11 there is no EMI reduction according to the invention hereof.

The FIG. 12 diagram represents circumstances which are changed as compared to those portrayed by FIG. 11 to the extent that one of the bank of circuit cards filling bay 31 and lacking electroconductive shunt strips 120 (or the like) has been replaced by the described circuit card 60 equipped with such a strip. As shown in FIG. 12, card 60 is inserted into the bay at a horizontal location about one-third of the way from the left hand end to the right hand end of opening 35. When card 60 is so inserted, the contacts 121, 122 on that card engage with two contact regions 59 on, respectively, the lower and upper designation strips 51, 52 to complete through the strip 120 on the card a shunt a.c. current path 170 between these two separate contact regions 59 and, thus, between two separate parts of the a.c. circuit path 160 extending around opening 35. The effect of that shunting of path 160 by path 170 is to divide the original single closed loop 161 into two loops 162 and 163 and, correspondingly, to divide the original slot antenna 175 into two slot antennae 176 and 177. In each of those two antennae, the larger of its two dimension is its horizontal dimension, but that dimension for each of slot antennae 176, 177 is smaller than the largest (or horizontal dimension) of slot antenna 175. From the empirical rule, therefore, that a slot antenna is a good radiator only of electromagnetic wave energy of wavelengths shorter than the antenna's larger dimension, it follows that the configuration shown in FIG. 12 will have the effect on the electromagnetic wave energy, generated in bay 31 over a spectrum of wavelengths, of substantially attenuating radiation through opening 35 of waves of relatively longer wavelength which would not be so attenuated by the FIG. 11 configuration. Hence, EMI reduction is realized in going from the FIG. 11 to the FIG. 12 configurations by the insertion, as described, in the bank of circuit cards in bay 31 of just one card 60 having on it a strip 120 providing a shunt path across the a.c. circuit path encircling the front opening of the bay.

In the FIG. 12 configuration, as between the slot antennae 177, 176 of smaller and larger horizontal dimension, respectively, the antenna 176 is controlling with respect to the amount of reduction in EMI power realized in relation to the FIG. 11 configuration. That is so because although slot antenna 177 tends to suppress radiation therefrom of EMI waves of wavelength longer than its horizontal dimension, those of such waves which are shorter in wavelength than the horizontal dimension of antenna 177 can and will still escape from bay 31 through the larger slot antenna 176.

From what has been said, it will be evident that if only one circuit card with an electroconductive shunting strip thereon is used for EMI reduction in a bank of cards in a bay, the optimum position for that card is the midway position in the largest dimension of the front opening of the bay. That is so since locating the card at that midway position leads to the greatest reduction in the EMI power radiated. It has been found that by the use of only one such card at approximately that midway position, it is possible to reduce the radiated EMI power substantially.

FIG. 13 is a diagram representing an extension of the above teachings in that card 60′ with an electroconductive shunting strip thereon like strip 120 has been inserted into the bank of cards in bay 31 (in place of another card not having such a strip) so as to have the effects of dividing the loop 162 (FIG. 12) for a.c. energy into two such loops 164, 165 (FIG. 13) and of concomitantly converting the slot antenna 176 of FIG.12 into two slot antennae 178, 179 (of FIG. 13). For the reasons discussed above, the FIG. 13 configuration yields greater EMI reduction than does the FIG. 12 configuration.

The increasing, as described, of the EMI reduction by increasing the number of slot antennae into which opening 35 is divided by the insertion into the bay 35 of an increased number of strip-carrying circuit cards is a technique which, it has been found, can be desirably carried out to its limit which occurs when every circuit card in the bank of cards in bay 31 has such a strip providing such a shunting path between parts of the path around the opening. The effect, of course, of having every such card so equipped is to divide the area of opening 35 into many slot antennae. When that is done, the horizontal dimension of each slot antenna becomes less than its vertical dimension so that by the mentioned rule of thumb, the size of such vertical dimension would then be primarily controlling as to how much EMI reduction could be realized. Hence, there would seem to be no point in having so many slot antennae.

It has been found, however, that when, by the use of cards with shunting strips therein to divide the opening 35 into slot antennae of similar shape, these antennae are increased in number beyond that yielding a horizontal dimension for each such antenna equal to its vertical dimension, a further reduction in EMI is still achievable. Moreover, it is desirable in any case that every circuit card in the bank of cards inserted into bay 31 be equipped with an electroconductive shunting strip (like strip 120) because, if only one or a few cards in the bank each has such a strip, it becomes a problem to foretell whether or not the one or few cards will have the proper positioning within the bay to divide the front opening 35 into a configuration

of slot antennae which maximizes the EMI reduction or comes acceptably close to so doing.

Accordingly, it is preferred that every circuit card inserted into bay 31 have thereon an electroconductive shunting means the same as or the equivalent of the strip 120 of card 160.

Consideration will now be given to some quantitative aspects of the effect on EMI reduction of the configurations represented by FIGS. 11-13. Typically, the distance between the upper lower shelves 21 bounding bay 31 (and also, the vertical dimension of opening 35 and the distance between the top and bottom margins of the boards of the circuit cards 1 is about 3.5 inches. The bay 31 is adapted to hold a bank of twenty four cards having spacings between centers of about three quarters of an inch when the cards are in their side-to-side relation within the bank. It follows that the horizontal dimension of opening 35 is about eighteen inches.

The EMI emissions which are of troublesomely high value occur for the most part in the frequency range of 40-90 MHz. For that range the EMI radiated under the circumstances represented by FIG. 11 comes within 1.5 Db of the maximum level of EMI permitted for such range by FCC regulations. That 1.5 Db "margin of safety" is, however, so small that there is a real risk that the margin will be wiped out altogether if changes are made to the design of the circuitry on the cards, or because of manufacturing variations or variations caused by differences in the sites at which the equipment is located.

In the circumstances represented by FIG. 12 in which the a.c. circuit path 160 around opening 35 is shunted by a strip on only one circuit card included in the card bank at a reasonably central location within the horizontal dimension of opening 35, the measured margin of safety is increased to about 5.5 Db for EMI in the 40-90 MHz range. A safety margin of such magnitude is a comfortable one for most applications. If the technique of adding more shunts to path 160 is carried out to the circumstances depicted by FIG. 13 and beyond to the limit at which all of the cards in the card bank have strips like strip 120 shunting path 160, then such margin of safety increases for the 40-90 MHz EMI range to about 9-10 Db, which is a good margin to work with indeed.

The above-described embodiments being exemplary only, it is to be understood that additions thereto, omissions therefrom, and modifications thereof can be made without departing from the spirit of the invention. Some examples without limitation of what has just been said are as follows.

The mentioned electroconductive shunting means comprising the pair of spaced contact means and the circuit means coupling them together need not be integral parts of a single member like strip 120. The mentioned circuit means can be provided by a variety of conductors such as, say, wire means, and, for high-frequency applications, might even be provided by capacitance instead of by a resistance element. The faceplate for the circuit card may be metallic and, if it is metallic, the electroconductive shunting means can conceivably be provided by the faceplate itself, provided that such faceplate is designed so that parts of it provide the pair of spaced, resiliently deflectable contact means heretofore described. If the faceplate is insulative, the mentioned electroconductive shunting means may be provided by an elongated deposit of metallic material disposed on the rear surface of the faceplate provided that, again, such pair of spaced, resiliently deflectable contact means are provided by having the end portion of the faceplate being suitably resiliently deflectable.

The electroconductive shunting means of the circuit card need not be carried by the faceplate but, rather, can be carried by the PWB of the card at the front of the PWB. The arrangement just mentioned is particularly useful where the card has no faceplate, as happens in some cases. The EMI reduction can be effected not only by a circuit card supported in guideways in the holding bay by the structure of the PWB of the card but also by a device so supported by a simple insertable contact support unit (as, say, without restriction, a plain board or other planar insertable member) received in such guideways and provided with such an electroconductive shunting means. Where the equipment with which one or more of the described EMI reducing circuit cards or devices are used does not have any designation strips, the invention hereof can be put into practice by having the spaced contacts on the card or cards (or device or devices) engage with regions which are on the framing around the front opening of the bay holding the cards, and which regions have surfaces which are of bare metal or which workably approximate that condition. There are numerous other variants within the invention hereof of the embodiments above described.

Accordingly, the invention is not to be considered as limited save as is consonant with the recitals of the following claims.

The claims defining the invention are as follows:

1. A device for reducing electromagnetic interference from equipment with a bay having guideways (44) therein for holding circuit cards (60) at predetermined locations in said bay, and having a front opening around which an a.c. circuit path (160) extends in a closed loop, said device comprising a contact support unit (60) having a front (73) and a rear (74), and adapted to be inserted, rear first, through such opening into said guideways to be held in position in said bay at one of such locations, and said device being CHARACTERIZED BY a pair of resilient electric contacts (121,122) spaced from each other at the front of and on opposite sides of said unit and each having a rearward electrical contact surface, and adapted, when said unit is so inserted, to engage respective ones of two contact regions (59,59) having respective forward facing electrical contact surfaces and electrically coupled with separate parts of said loop and to thereby be each resiliently deflected so as to make pressure electric contacts with said regions, and said device being further structurally CHARACTERIZED BY an electrical coupling together of both said resilient contacts, said resilient contacts and said coupling together thereof being adapted upon the making of such pressure contacts to complete a shunt a.c. circuit path (120) between such loop parts.

2. A device as in claim 1 in which said contact support unit is a circuit card comprising an insulation board having at its front (73) a laterally extending front edge face and a pair of laterally spaced parallel margins (71,72) therefor longitudinally extending between said face and the rear (74) of said board, said board has thereon electronic circuitry distributed over said board to leave thereon at its margins a pair of border strips which are both bare of said circuitry and are contiguous with the portion of the board laterally between such strips at inner boundaries of such strips of which each boundary is respective to a corresponding one of said strips and is laterally inwards of the board margin at which that strip is located, and in which said device is CHARACTERIZED IN THAT at least respective portions of said two resilient contacts are

AUSTRALIAN PATENT OFFICE

disposed on laterally opposite sides of said card laterally outwards of the inner boundaries of said border strips.

3. A device as in claim 2 CHARACTERIZED IN THAT at least respective portions of said two contact means are disposed laterally outward of said two board margins.

4. A device as in claim 2 further comprising a faceplate (90) having front and back sides and fastened to said board to be disposed normal to the lateral and longitudinal dimensions of said board so as to be transverse thereto and further being disposed laterally forward of and adjacent to said board's front edge face, said device being CHARACTERIZED IN THAT said resilient contacts are disposed on the side of said faceplate towards said board, and each have a backward facing electrical contact surface, and in that said plate provides a backing for said contacts.

5. A device as in claim 1 CHARACTERIZED IN THAT said coupling together of said spaced resilient contacts is effected by at least one electric circuit element (150) extending between and electromechanically connected to both of said resilient contacts.

6. A device as in claim 4 in which said faceplate's back side had separate portions which are respectively registering and non-registering in the transverse dimension with said board's front edge face, said device being CHARACTERIZED IN THAT said electrical coupling together of said spaced resilient contacts is effected by at least one elongated metallic electrical conductor (150) stretching between said resilient contacts in a path extending over said non-registering portions of said place, such conductor being electromechanically coupled with both said resilient contacts to provide a low resistance shunt between them.

7. A device according to claim 6 in which said board has thereon discrete components mounted on said board to project forward from said front edge face (73) thereof, said non-registering portion of said plate has formed therein apertures (101,102) for reception therein of said discrete components (77,78), and in which said path of said electrical conductor (150) over said non-registering plate

AUSTRALIAN PATENT OFFICE MB

portion has an irregular configuration shaped to avoid blockage by said conductor of insertion of said components into said apertures.

8. A device according to claim 4 in which each of said resilient contact means comprises a resilient metallic blade spring contact having an anchored end (141,142) fixedly fastened to the back side of said plate and a resiliently deflectable free end (143,144) disposed in undeflected condition to the rear of and spaced from said plate.

9. A device according to claim 6, in which said two resilient contacts and said electrical conductor constitute separate portions of an electroconductive metal strip fixedly fastened to the back side of said plate at two laterally spaced locations (123,124) on said strip laterally inwards of the end of said strip the portion of said strip between said locations constituting said conductor, and the two portions of such strip laterally outwards of said locations constituting said two resilient contacts.

10. A device according to claim 9, in which said strip has holes (123,124) therethrough at said two locations and is fastened to said place by plastic studs integral with said plate and passing through said holes and having expanded heads (131) formed therein on the side of said strip away from said plate.

11. A device for reducing electromagnetic interference, said device being substantially as described with reference to the drawings.

DATED this TWENTY SECOND day of MARCH 1991
AMERICAN TELEPHONE & TELEGRAPH COMPANY

Patent Attorneys for the Applicant
SPRUSON & FERGUSON

amg/0002w

AUSTRALIAN PATENT OFFICE

15 5 90 55062

FIG. 1

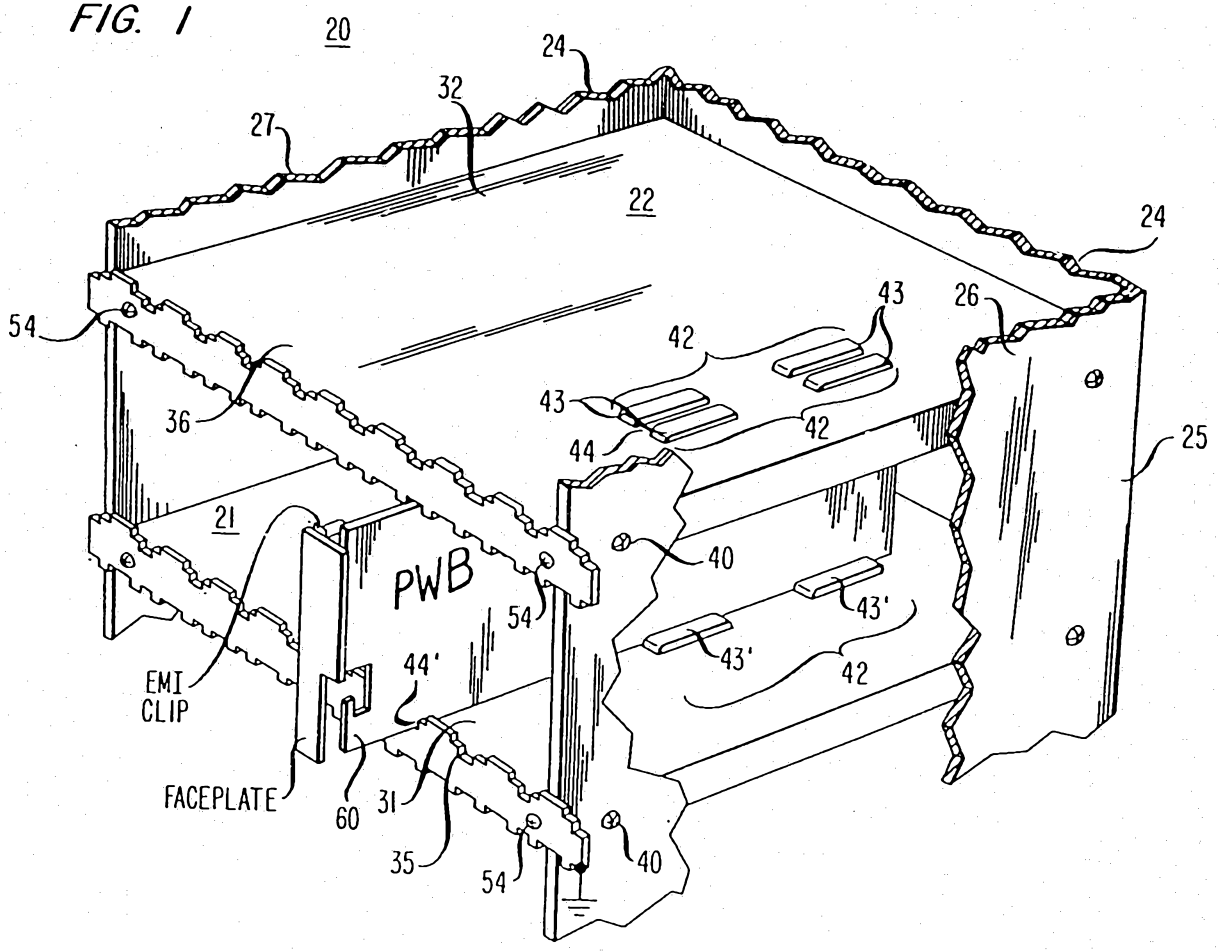




55062/90

FIG. 2

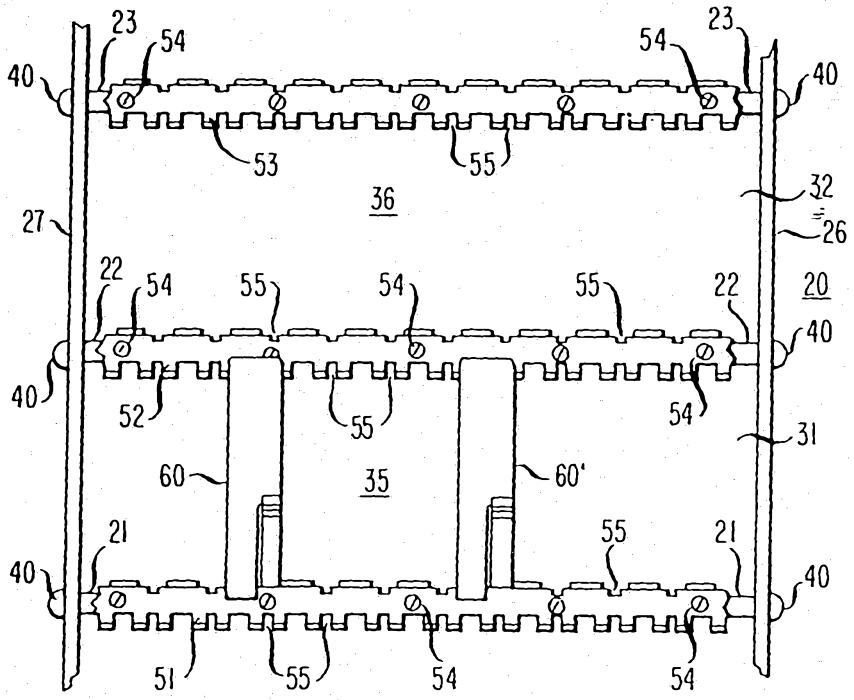
23
54
40
53
55
36
32
26
27
22
20
52
60
60'
35
31
21
51

FIG. 3

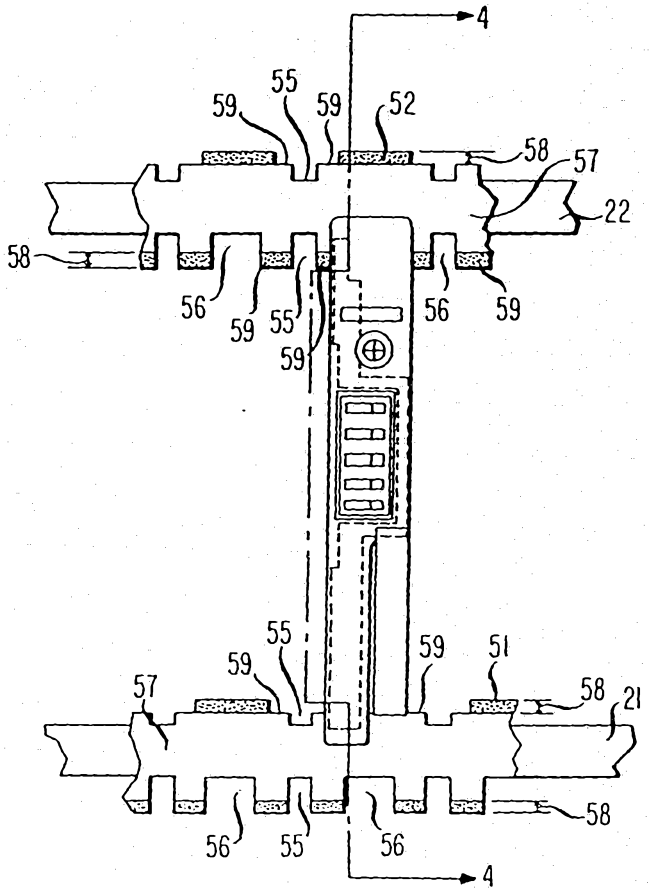
4
59
55
52
58
57
22
56
51
21

FIG. 4

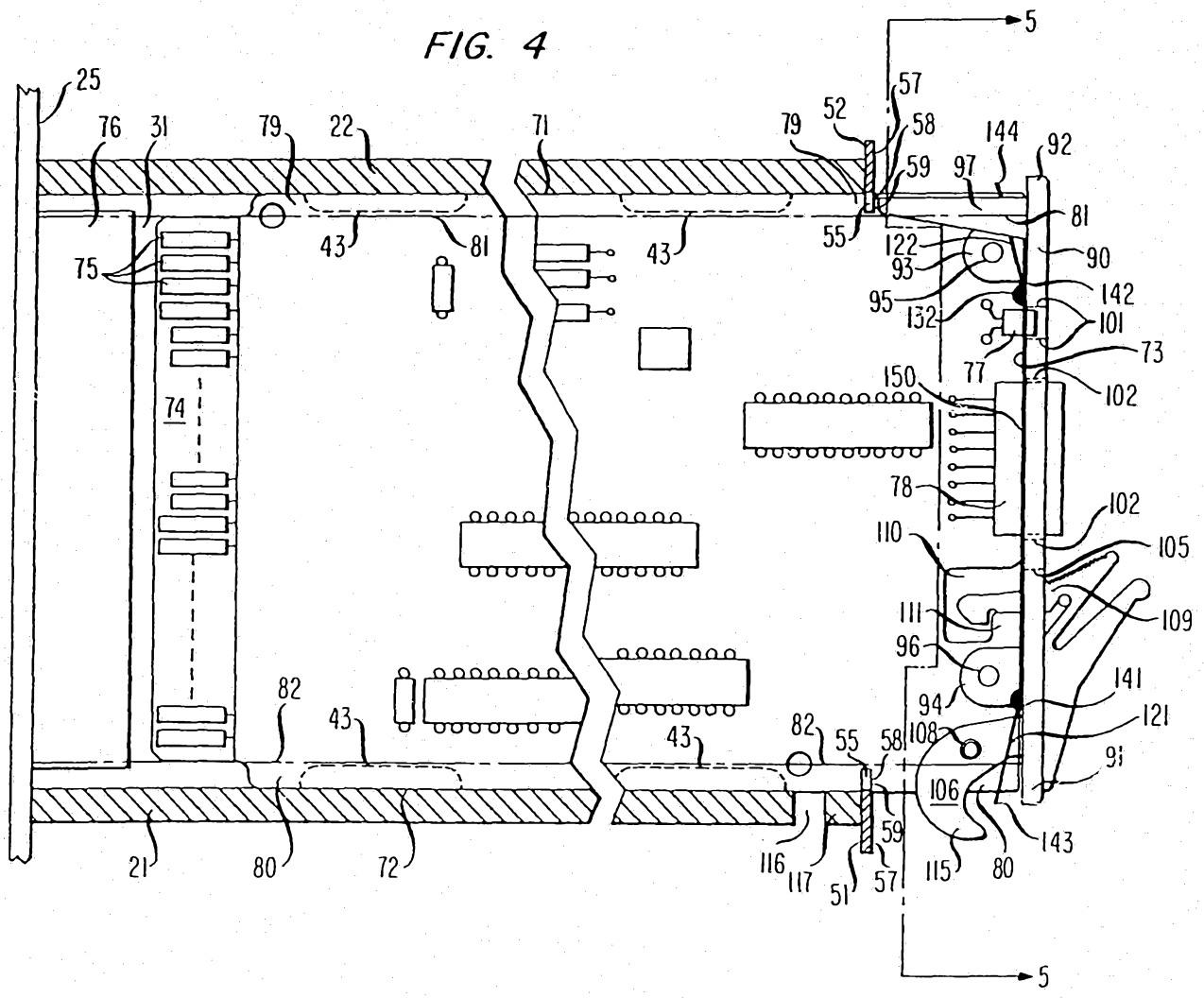
25
76
31
79
22
71
79
52
57
58
59
144
92
97
81
90
142
101
73
102
102
105
109
141
121
91
143
80
115
106
108
94
96
111
110
78
150
77
132
95
93
122
55
43
81
75
74
82
43
43
82
55
58
59
57
51
117
116
21
80
72
5
5

55062/90

FIG. 5

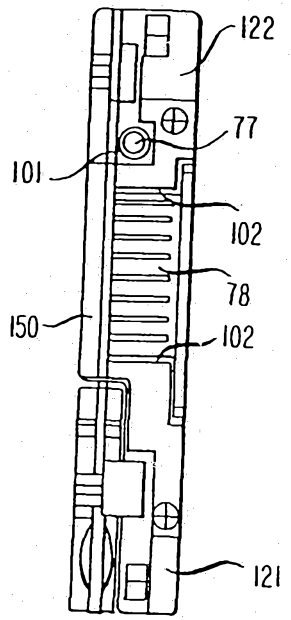


FIG. 6

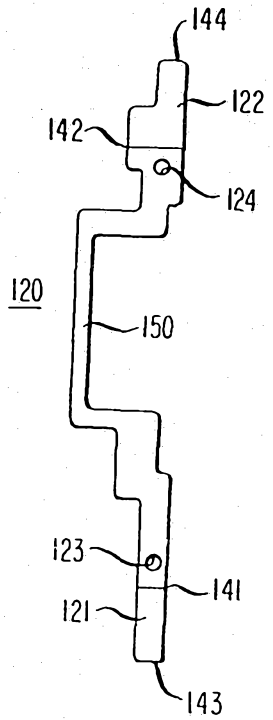


FIG. 7

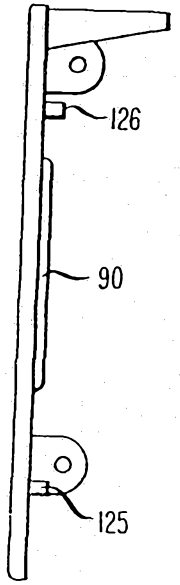

FIG. 8

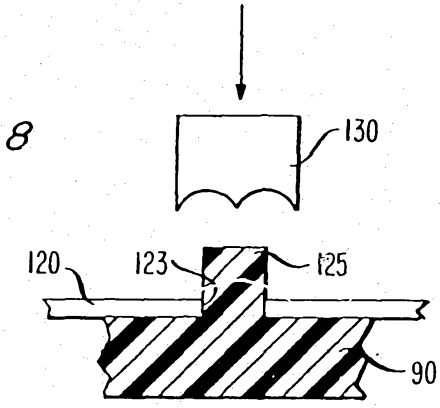


FIG. 9

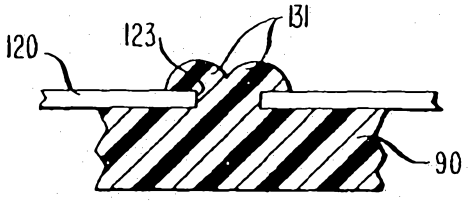


FIG. 10

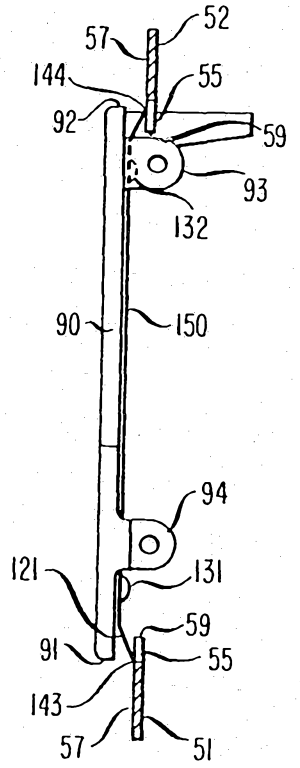

FIG. 11

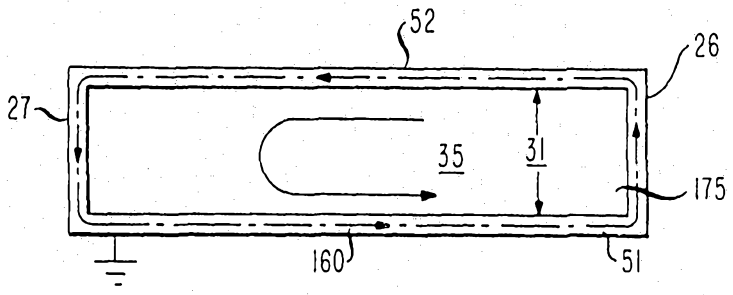


FIG. 12

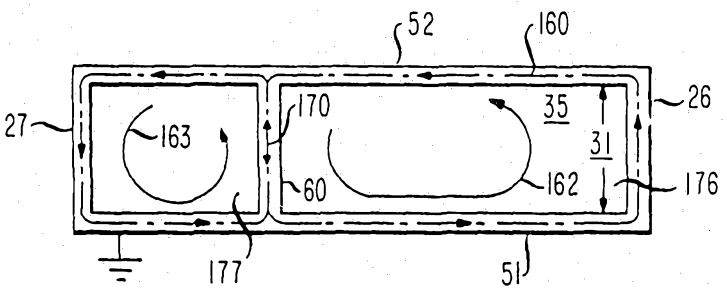


FIG. 13

