March 10, 1925. 1,528,792

R. G. RICHARDSON

AUTOMATIC TELEPHONE SYSTEM

Original Filed Feb. 13, 1920

Fig: 1

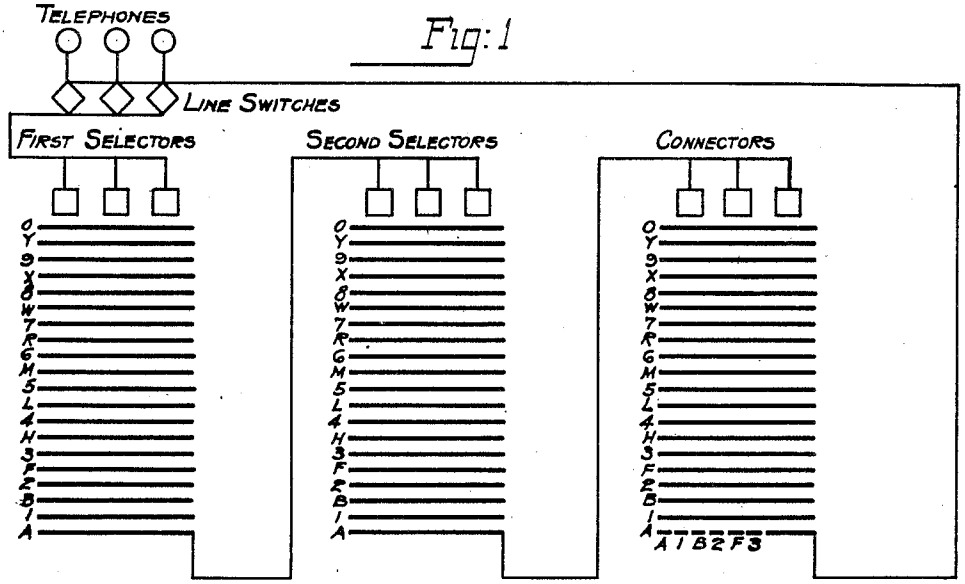

Fig: 2

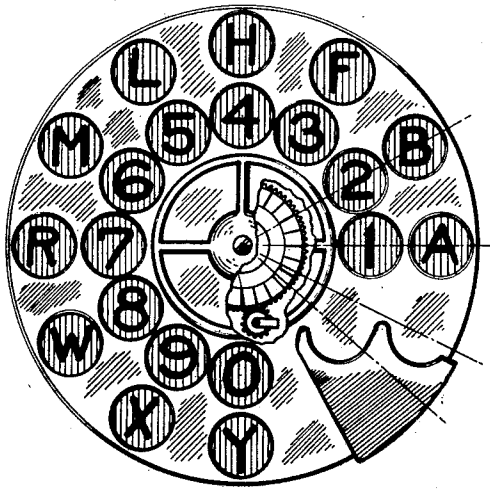

Fig: 3



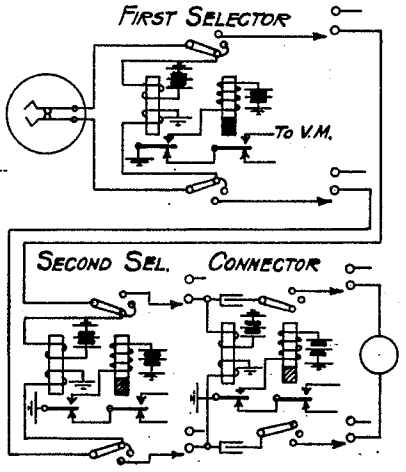

Fig: 4

Inventor
Rodney G. Richardson.
Chas. M. Candy.
Atty:

Patented Mar. 10, 1925. 1,528,792

UNITED STATES PATENT OFFICE.

RODNEY G. RICHARDSON, OF CHICAGO, ILLINOIS, ASSIGNOR TO AUTOMATIC ELECTRIC COMPANY, OF CHICAGO, ILLINOIS, A CORPORATION OF ILLINOIS..

AUTOMATIC TELEPHONE SYSTEM.

Application filed February 13, 1920, Serial No. 358,382. Renewed July 23, 1924.

To all whom it may concern:

Be it known that I, RODNEY G. RICHARDSON, a citizen of the United States of America, and resident of Chicago, in the county of Cook, in the State of Illinois, have invented certain new and useful Improvements in Automatic Telephone Systems, of which the following is a specification.

My invention relates in general to automatic telephone systems and has for its object the provision of a large capacity automatic telephone system without increasing the number of digits in the subscribers' telephone numbers.

The general type of automatic system in common use is what is known as the Strowger percentage trunking system. It is strictly a decimal system and employs vertical and rotary selector and connector switches having ten levels of bank contacts and ten contacts per level. The capacity of a system of this kind depends on the number of selector switches used in a complete connection. Each group of connectors has a capacity of 100 lines and if first selectors only are employed there would be ten groups of connectors, giving a capacity of 1000 lines. If a larger system is desired, so called second selectors are introduced between the first selectors and the connectors, increasing the size to 10,000 lines. Still larger systems may be had by adding third selectors, or fourth selectors, giving ultimate capacities of 100,000 and 1,000,000 lines, respectively. Thus the capacity may be increased to any desired extent.

But as soon as the size gets beyond 10,000 lines certain difficulties present themselves. One of the principal objections is the difficulty experienced by the subscribers in remembering the digits in the telephone numbers. A system of 10,000 lines has 4 digits, a 100,000 line system has 5 digits, and a 1,000,000 line system has 6 digits, in each telephone number. It has been found by experience that 4 digits is all that a subscriber can remember conveniently from the time he looks the number up in the directory until he has completed calling it on his dial. Obviously also the liability of actual error on the part of the subscriber is increased in proportion to the number of operations he has to perform, regardless of whether his memory is faulty or not; and this applies also to the operation of the switches, for the possibility of switch failure is proportional to the number of switches required to be operated. These considerations show difficulties which are in addition to the others naturally consequent on the use of an unduly large number of selector switches in serial relation, which results in an excessively expanded trunking system with all the attendant complications.

Numerous efforts have been made in the past to provide a large capacity system without unduly increasing the digits in the telephone numbers, and therefore the trunking operations required to set up a connection, but without entire success, so far as I am aware. One of the most obvious things to do, and one which has been availed of before, although in a different way, is to increase the size and capacity of the switches; and this is the way in which I have approached the problem. I provide switches which have 20, 30, or 40 levels, as the case may be, instead of only 10 levels. The connectors will of course have the same number of contact sets in each level as there are levels, while this may or may not be true of the selectors, depending on the desired size of the trunk groups.

In order to operate these large size switches I provide what I term a "multiple impulse" calling device. In this calling device the number of rows of finger holes, ten holes per row, is equal to the number of levels in one of the central office switches divided by ten. Thus in a 20 level system the calling devices will have two rows of finger holes, while in a 30 level system the calling devices will have three rows of finger holes, etc. In the operation of the calling device the impulses transmitted are not equal to the numerical designation of the finger hole used to operate it, but are equal to a multiple of such numerical designation. Thus in a 20 level system if the digit 1 is called, two impulses will be transmitted, if the digit 5 is called 10 impulses, while a maximum of 20 impulses results from the calling of the digit 0. In the same way, in a 30 level system, if the digit 5 is called 15 impulses will be transmitted, and a maximum of 30 impulses will be transmitted if the digit 0 is called. The multiple impulse principle is applied to all the rows of finger holes on the calling device the same way except that in the case of every row except

one means is provided for omitting one or more impulses, preferably at the beginning of each series, although the omission might occur at the end. In a 20 level system, if the calling device is operated from a finger hole in one of the rows the impulses transmitted will be equal to exactly twice the numerical designation of the finger hole, as before stated, while if the calling device is operated from the corresponding hole in the other row one of the impulses will be omitted, and the total number of impulses transmitted will be one less than in the previous case. In a 30 level system, in which the calling devices have three rows of finger holes, if a digit is called on the inner row of finger holes, for example, the digit 5, exactly three times as many impulses or 15 impulses will be produced; if the corresponding finger hole in the next row is used one impulse is omitted from the beginning of the series and 14 impulses are produced; and if the corresponding finger hole in the outside row is used two impulses are omitted and 13 impulses are produced.

It will be seen that the purpose of omitting one or more impulses is to enable the switches to operate on those levels which are not exact multiples of the digits 1 to 0, inclusive, thereby permitting all the levels to be used. Separate designations are used to indicate corresponding finger holes in the several rows, so that the subscribers will know by the telephone numbers which row to use in the case of each digit or element of the number. This however is a detail which will be explained later in connection with the more detailed description of the apparatus employed in which reference will be made to the accompanying drawings.

The specific embodiment of the invention with which I have chosen to illustrate the same in the present application is a 20 level system. Fig. 1 shows a schematic diagram of the trunking, with the numbering of the bank levels; Fig. 2 is a view of a calling device adapted for use in the system shown in Fig. 1; Fig. 3 shows a type of impulse cam which may be used in the calling device; while Fig. 4 is a skeleton diagram of the control circuit for a series of the central office switches.

Referring to Fig. 1 I will first explain the trunking scheme briefly. Three subscribers' telephone stations are indicated by the circles at the upper left hand corner of the diagram. These stations are connected by the usual line circuits with the exchange, where they terminate preferably in line switches of some kind through the medium of which the lines when calling may be extended to idle first selector switches. The first selectors are the first in the series of numerical switches which are used to establish connection in accordance with called telephone numbers. The three squares labeled "First selectors" indicate three of these switches, and the multiple banks thereof, comprising 20 levels of contact sects are indicated by the 20 heavy horizontal lines. From each first selector level trunk lines extend to a group of second selectors, there being in all 20 groups of such second selectors. The group in which the trunk lines from the first selector level terminate is indicated in the drawing by three more squares, labeled "Second selectors", and the multiple banks are indicated by 20 horizontal lines as in the case of the first selectors. Each group of second selectors has access through its 20 bank levels to 20 groups of connectors. As in the case of the second selectors, only one group of connectors is shown, this being the group accessible from the first level of the group of second selectors shown. The connectors are likewise indicated by three squares, which are labeled "Connectors" in the drawing, and the banks are indicated by the heavy lines as before. It will be seen that the trunking scheme as a whole is similar to the usual one in common use, the only substantial difference being in the capacity of the switches.

In mechanical construction the selector and connector switches may be of the ordinary vertical and rotary type, as shown in the U. S. Patents to Keith, Erickson, and Erickson, Numbers 815,321 and 815,176, the vertical shafts, however, being provided with more notches corresponding to the increased number of bank levels. The circuits may be of the well known two-wire type, as illustrated by the U. S. Patent to Newforth, No. 13,901, reissued April 13, 1915, as much of the circuits as is necessary for an understanding of the method of switch control being shown in Fig. 4.

The numbering of the bank levels will now be considered. As shown in the drawing, the even levels, second, fourth, sixth, etc., correspond to the digits 1, 2, 3, etc., which are the designations appearing beneath the finger holes of the inner row of finger holes on the calling devices; while the odd levels, first, third, fifth, etc., correspond to the letters A, B, F, etc., which are the designations appearing beneath the finger holes of the outside row on the calling devices. In the connectors, the individual contact sets in each level are similarly numbered, for they are selected by numerical operations under control of the calling devices.

Inasmuch as the connectors have 20 levels and 20 contact sets in each level, the capacity of each group of connectors will be 400 lines. There are 20 groups of connectors accessible to each group of second selectors, which would give each group of second selectors access to 8000 lines; and since there

are 20 groups of second selectors the total capacity of the 20 level system shown will be 160,000 lines. When this number of lines is compared with the capacity of the ordinary four digit decimal system, which is 10,000 lines, the enormous increase in capacity may be realized. The increase is still more rapid in the case of the 30 and 40 level systems. I have prepared a table which is appended below, from which the capacity of any desired system may be found without calculation. The table also includes the usual 10 level decimal system to permit a ready comparison.

	Standard decimal system.	Multiple impulse system 20 levels.	Multiple impulse system 30 levels.	Multiple impulse system 40 levels.
Capacity, 2 digits	100	400	900	1,600
Capacity, 3 digits	1,000	8,000	27,000	64,000
Capacity, 4 digits	10,000	160,000	710,000	2,560,000
Capacity, 5 digits	100,000	3,200,000	21,300,000	102,400,000
Capacity, 6 digits	1,000,000	.....	.....	.....

I will now describe the calling device more in detail, for the purpose of explaining the multiple impulse principle and its application to the control of the central office switches. In general, the calling device shown is of the two wire type as described on pages 34 and 35 of Automatic Telephony, by Smith and Campbell. An improved form of this calling device is shown and described in the U. S. Patent to Keith, No. 1,279,352. There are certain changes, however, which will be pointed out. In the first place the number of impulses transmitted for any given digit must be multiplied by 2. This can be accomplished by altering the gear ratio, and in the larger systems using a multiplier of 3 or 4, changing the gear ratio is the preferred way. But in the twenty level system, the desired result may be accomplished very easily by substituting an impulse cam having four blades for the usual cam having only two. This is the means employed in the calling device shown in the drawing, the four bladed impulse cam being shown in Fig. 3.

It will be clear from the above that when any digit is called exactly twice as many interruptions will be produced by the impulse springs. For instance, if we assume that a first selector is being operated, as for example, the first selector shown in Fig. 4, if the digit 1 is called, two interruptions will be produced and the selector wipers will be raised to the second level, if the digit 2 is called, four interruptions will be produced and the wipers will be raised to the fourth level, and so on. This much being understood it remains to be seen how the proper number of interruptions is produced by calling the letters A. B, F, etc., to raise the selector wipers to the odd levels. In order to make this latter clear two radii are shown in dotted lines passing through the centres of the first two finger holes in each row. Also two other radii are shown which indicate the angular limit of movement of the dial when operated from finger holes in the two rows, respectively. These radii pass through the centre of the dial and it will be seen that the crown teeth on the large gear wheel (adapted to be engaged by a dog on the under surface of the dial) are spaced in definite relation thereto. Thus there are exactly two crown teeth in the angular distance between any two adjacent finger holes. Now if the digit 1 is pulled on the dial the dog will be moved past two crown teeth and upon the dial being released will engage the second tooth and rotate the mechanism sufficient to produce two interruptions. But if the letter A is pulled on the dial, owing to the displacement of the outside portion of the finger stop, which displacement is exactly equal to the angular distance between adjacent crown teeth, the forward movement of the dial will be stopped after the dog has been moved past one of the crown teeth, and it follows that when the dial is released the mechanism is rotated only half as far, or sufficient to produce one interruption. If the letter B is pulled, the dog will of course be moved past two teeth while the dial is being moved the angular distance between finger holes B and A, just the same as though the digit 2 had been called, but the further movement to the limit fixed by the finger stop only results in moving the dog past one more tooth, and when the dial is released a total of three interruptions are produced. The operation of producing one or three interruptions will naturally result in raising the selector either one or three steps, as the case may be, and since these same considerations apply to the calling of the remaining letters, access is thus given to all the odd selector levels.

The construction of a calling device for a 30 level system will be readily understood from the foregoing. A larger dial must be used having an additional row of finger holes, which may be numbered in accordance with the last ten letters of the alphabet, the second row of holes being numbered in accordance with the first ten. As before stated, the gear ratio should also be changed to provide for producing three interruptions when the digit one is called. The angular distance between adjacent crown teeth on the gear wheel will be one third the angular distance between adjacent finger holes, and a three position finger stop will be used in which the displacement between the first and second positions, and between the second and third positions, is equal to the angular distance between adjacent crown teeth. A calling device so constructed is adapted to operate a selector to raise its wipers to any

desired level in a total of 30 levels. By following the same general principles a calling device may be constructed for a 40 level system, or a still larger system, although it is believed that it will be found impracticable to use switches having more than 40 levels.

It will be understood from the foregoing that the telephone numbers in a system constructed in accordance with my invention may be composed solely of digits, of letters, or of a mixture of the two. Thus in the 20 level system shown there will be certain numbers which are called entirely on the inner row of finger holes, as #1234, for example. Then there will be numbers like # A B F H, for example, which are called entirely on the outside row of holes; and finally there are the composite numbers such as # A 2 F 4, which form the greater portion of the total, and which are called in part on each row of holes. The mixing of figures and letters causes no confusion, but rather facilitates the remembering of a number, and since a system of the largest required size can be built according to these principles to use a maximum of four digits or other elements, the great advantages of the invention will be evident.

There are other advantages not hitherto mentioned, the principal one of which is the great economy in switches which results from the large capacity of the switches and the large size of the trunk groups. For example, each group of connectors has access to 400 lines. About 25 or 30 connectors would be sufficient under ordinary conditions to handle the traffic, while if the 400 lines were divided into four 100 line groups each such group would require ten connectors, or a total of forty. But the increased efficiency which results from large groups is well understood and need not be further commented upon.

While I have shown and explained a certain specific form of my invention with certain modifications thereof, I am of the opinion that other modifications can be made which may be of advantage under certain circumstances, without departing beyond the real scope of the invention, and I do not therefore wish to limit the invention to the exact forms described, but desire to include and have protected by Letters Patent all forms thereof which come within the scope of the appended claims:

What I claim as my invention is:

1. In a telephone system, an automatic switch, a plurality of groups of lines accessible to said switch, a calling device for controlling said switch by current impulses, a movable dial for said device, a series of adjacent finger holds on said dial less in number than the number of said groups, and multiplying impulse sending mechanism controlled by said dial and capable of sending a maximum number of impulses equal to the number of said groups.

2. In a telephone system, a calling device, a movable dial having a series of finger holds for use in operating said device in accordance with the digits in called telephone numbers, an automatic switch, and mechanism controlled by said dial each time it is operated for producing current impulses to operate said switch, the number of impulses produced each time being a whole multiple of the digit called.

3. In a telephone system, an automatic switch, trunk lines accessible to said switch divided into main groups and sub-groups, a calling device for controlling said switch having separate series of operating means corresponding in number to said groups and sub-groups, and impulse sending mechanism controllable by any of said operating means, and adapted to produce a maximum number of impulses equal to the total number of said sub-groups.

4. In a telephone system, an automatic switch, trunk lines accessible to said switch divided into main groups and sub-groups, a calling device for controlling said switch, a movable dial for said device having separate series of finger holds, the number of series being equal to the total number of said main groups, and the total number of finger holds being equal to the total number of said sub-groups, and impulse sending mechanism controlled by said dial when the same is operated, and arranged to produce a maximum number of impulses equal to the total number of said sub-groups.

5. In a telephone system, an automatic switch, a calling device for controlling said switch, a movable member forming part of said device having two series of finger holds, and impulse sending mechanism controllable by said member to produce an even number of impulses when the member is operated from any finger hold in one series, and an odd number of impulses when the member is operated from any finger hold in the other series.

6. In a telephone system, a calling device having a movable dial, two series of finger holds on said dial, impulse sending mechanism controllable by said dial to produce an even number of impulses when the dial is operated from any finger hold in one series, and an odd number of impulses when the dial is operated from any finger hold in the other series, an automatic switch having access to even and odd numbered groups of trunk lines arranged alternately, and a suitable circuit over which the said switch is controlled by said device to select desired groups in accordance with impulses produced by said mechanism.

7. In a telephone system, an automatic

switch, twenty groups of lines accessible to said switch, a calling device for operating said switch by current impulses, a dial for said device having two rows of finger holds, there being ten finger holds in each row, an impulse sending mechanism controllable by said dial to transmit current impulses to said switch, the number of impulses being equal to twice the number of the finger hold in the row when the dial is operated from a finger hold in one of said rows, and being equal to twice the number of the finger hold in the row less one when the dial is operated from a finger hold in the other of said rows.

8. In a telephone system, an automatic switch, groups of lines accessible to said switch the number of said groups being a multiple of ten, a calling device for operating said switch by current impulses, a dial for said calling device having a plurality of rows of finger holds, there being ten finger holds in each row, an impulse sending mechanism controllable by said dial when the same is operated from a finger hold in one of said rows to transmit current impulses to said switch which are equal in number to a multiple of the number of the finger hold in the row, and which are equal in number to a multiple of the number of the finger hold in the row less one or more impulses when the dial is operated from any other finger hold.

9. In a telephone system, a calling device, a movable dial having two series of finger holes for operating said device, one series of holes being marked in accordance with the digits in the telephone numbers, while the other series of holes is marked in accordance with other characters also forming part of the telephone numbers, an automatic switch, and mechanism controlled by said dial each time it is operated to produce current impulses to operate said switch, the number of impulses produced when the dial is operated in accordance with any digit being a multiple of the digit called, and the number of impulses produced when the dial is operated in accordance with one of said other characters being equal to a multiple of the corresponding digit less one.

10. In a telephone system, a calling device, a movable dial having two series of finger holes for operating said device, one series of holes being marked in accordance with the digits in the telephone numbers, while the other series of holes is marked in accordance with other characters also forming part of the telephone numbers, an automatic switch, mechanism controlled by said dial each time it is operated to produce current impulses to operate said switch, the number of impulses produced when the dial is operated in accordance with any digit being a multiple of the digit called, and means for causing one impulse to be omitted when the dial is operated in accordance with one of said other characters, whereby the number of impulses produced will be equal to a multiple of the corresponding digit less one.

11. In a telephone system, a calling device, a movable dial having two series of finger holes for operating said device, one series of holes being marked in accordance with the digits in the telephone numbers, while the other series of holes is marked in accordance with other characters also forming part of the telephone numbers, an automatic switch, mechanism controlled by said dial each time it is operated to produce current impulses to operate said switch, the number of impulses produced when the dial is operated in accordance with any digit being a multiple of the digit called, and a two position finger stop, one position of said stop being displaced a definite amount so as to cause one impulse to be omitted when the dial is operated in accordance with one of said other characters, whereby the number of impulses produced is equal to a multiple of the corresponding digit less one.

12. In a calling device for automatic telephone system, a rotatable dial having a row of finger holds marked in accordance with the ten digits, and mechanism controllable by said dial to produce current impulses, the number of impulses produced being a whole multiple of the digit called.

13. In a telephone system, automatic switches having bank contacts arranged in different groups, the number of groups being a multiple of ten, calling devices having each a plurality of operating means arranged in separate rows, the total number of said operating means being equal to the number of said groups and the number of said rows being equal to the number of said groups divided by ten, multiplying impulse sending mechanism for sending impulses in accordance with a multiplier which is equal to the total number of said rows, and means for omitting impulses when said device is actuated by operating means in certain of said rows, the number of impulses omitted being equal to the number of the row used minus one.

14. In a calling device for automatic telephone systems, a rotatable dial having two concentric rows of finger holds, a two position finger stop, one position being displaced from the other an angular distance equal to one half the angular distance between any two adjacent finger holds, and impulse transmitting mechanism controlled by the said dial.

15. In a calling device for automatic telephone systems, impulse sending mechanism, a rotatable dial for controlling said mechanism, said dial having a plurality of concentric rows of finger holds, and a finger

stop for limiting the rotation of the dial, said finger stop having a corresponding plurality of limiting positions angularly displaced from one another, whereby the rotary movement of the dial may be stopped at different points depending on the row of finger holds from which it is operated.

16. In a calling device for automatic telephone systems, impulse sending mechanism, a rotatable dial for controlling said mechanism, a plurality of concentric rows of finger holds for rotating said dial, and means for stopping the rotation of said dial at different points depending on the row of finger holds from which it is operated.

17. In a calling device for automatic telephone systems, impulse sending mechanism, a rotatable dial for controlling said mechanism, a plurality of concentric rows of finger holes for rotating said dial, the corresponding holes in each row being located on the same radii, and means for stopping the rotation of said dial at different points depending on the row of finger holes from which it is operated.

18. In a telephone system, an automatic switch, a plurality of groups of lines accessible to said switch, a calling device for controlling said switch by current impulses, a movable dial for said device, a series of adjacent finger holes on said dial less in number than the number of said groups, other series of adjacent finger holes, corresponding finger holes being on the same radii, and multiplying impulse sending mechanism controlled by said dial and capable of sending a maximum number of impulses equal to the number of said groups.

19. In a telephone system, an automatic switch, trunk lines accessible to said switch divided into main groups and sub groups, a calling device for controlling said switch, a movable dial for said device having separate series of finger holes, the number of series being equal to the number of said main groups, corresponding finger holes in each series being on the same radii, the total number of finger holes being equal to the total number of said sub groups, an impulse sending mechanism controlled by said dial when the same is operated and arranged to produce a maximum number of impulses equal to the total number of said sub groups.

20. In a telephone system, an automatic switch, groups of lines accessible to said switch, a number of said groups being in multiple of ten, a calling device for operating said switch by current impulses, a dial for said calling device having a plurality of rows of finger holes, there being ten finger holes in each row with corresponding finger holes on the same radii, an impulse sending mechanism controllable by said dial when the same is operated from a finger hole in one of said rows to transmit current impulses through said switch which are equal in number to a multiple of the digit sent, and which are equal in number to a multiple of the digit sent less one or more impulses when the dial is operated from any other finger hole.

Signed by me at Chicago, Cook County, Illinois, this 7th day of February, 1920.

RODNEY G. RICHARDSON.