R. SEMPLE.

PISTOL.

APPLICATION FILED OCT. 3, 1914.

1,196,035.

Patented Aug. 29, 1916.

3 SHEETS—SHEET 1.

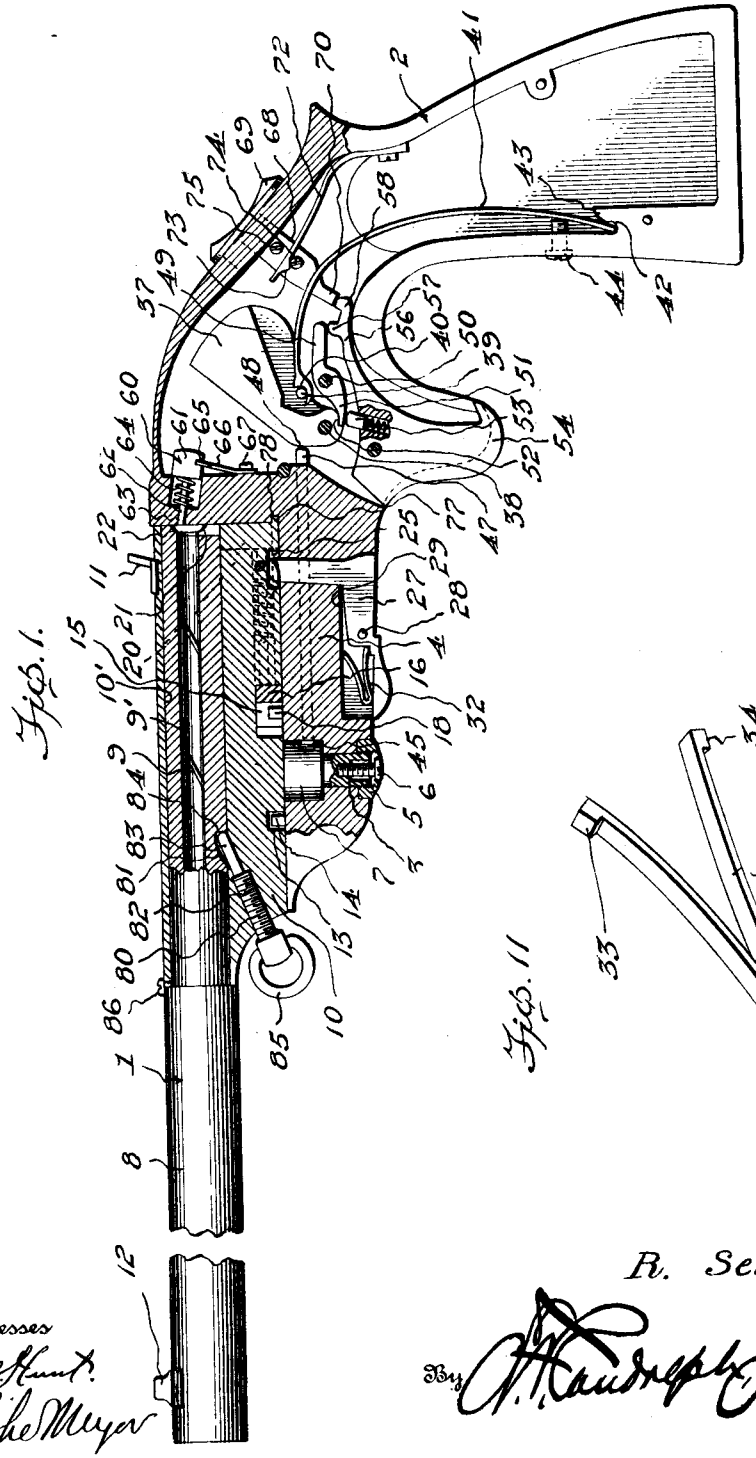

Fig. 1.



Fig. 11

Witnesses

P. M. Hunt.

Robt. Meyer

Inventor

R. Semple

By A. Randolph Jr.

Attorney

THE NATIONAL PETERS CO., PHOTO-LITHO. WASHINGTON, D. C.

R. SEMPLE.

PISTOL.

APPLICATION FILED OCT. 3, 1914.

1,196,035.

Patented Aug. 29, 1916.

3 SHEETS—SHEET 2.

Fig. 2.

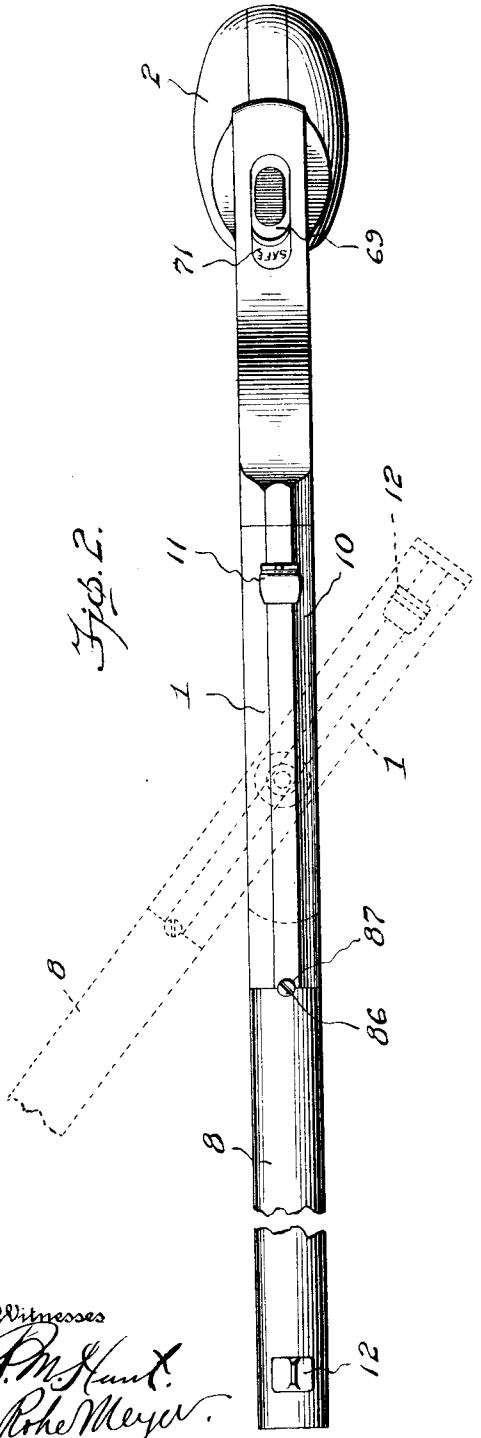


Fig. 3.

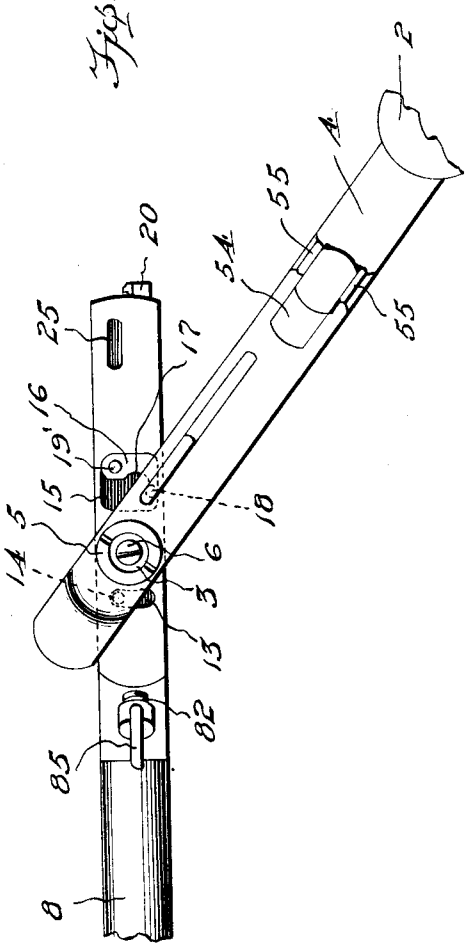


Witnesses

P. M. Hunt.

Rohe Meyer.

Inventor

R. Semple

By A. Landreth Jr.

Attorney

THE NORRIS PETERS CO., PHOTO-LITHO., WASHINGTON, D. C.

R. SEMPLE.

PISTOL.

APPLICATION FILED OCT. 3, 1914.

**1,196,035.**

Patented Aug. 29, 1916.

3 SHEETS—SHEET 3.

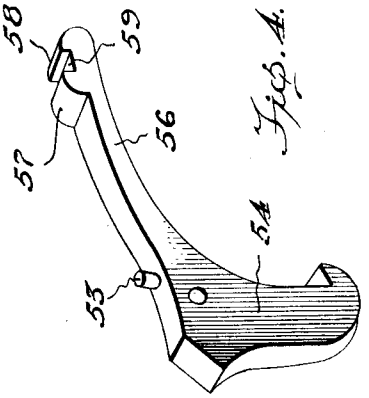


Fig. 4.

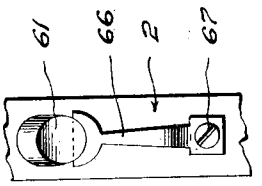


Fig. 10.

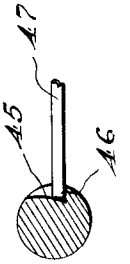


Fig. 7.

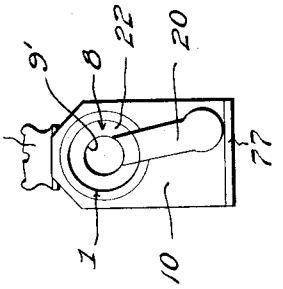


Fig. 9.

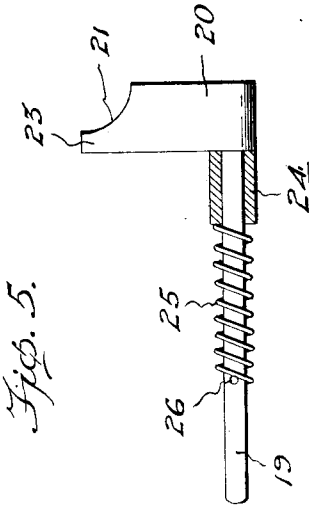


Fig. 5.

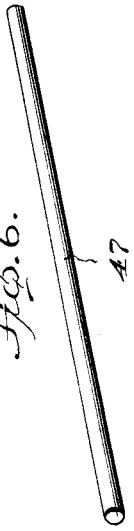


Fig. 6.

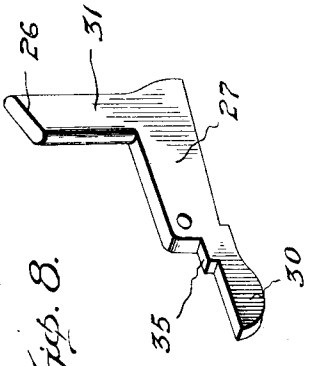


Fig. 8.

Inventor

R. Semple

Witnesses

Attorney

THE NORRIS PETERS CO., PHOTO-LITHO., WASHINGTON, D. C.

# UNITED STATES PATENT OFFICE.

ROSS SEMPLE, OF WASHINGTON, PENNSYLVANIA, ASSIGNOR OF ONE-HALF TO FLORENCE L. STEWARD, OF WASHINGTON, PENNSYLVANIA.

## PISTOL.

1,196,035. Specification of Letters Patent. Patented Aug. 29, 1916.

Application filed October 3, 1914. Serial No. 864,765.

*To all whom it may concern:*

Be it known that I, Ross Semple, a citizen of the United States, residing at Washington, in the county of Washington and State of Pennsylvania, have invented certain new and useful Improvements in Pistols; and I do hereby declare the following to be a full, clear, and exact description of the invention, such as will enable others skilled in the art to which it appertains to make and use the same.

This invention relates to pistols, and more particularly to target shooting pistols and the primary object of the invention is the provision of a target pistol which is constructed in the manner commercially known as hammerless and to associate with the pistol safety mechanism for controlling the operation of the trigger and the hammer for discharging the projectile.

Another object of this invention is the provision of a pistol as specified in which the barrel swings horizontally and in one horizontal swinging movement discharges or ejects a spent shell, and cocks the pistol preparatory to discharging the same.

Another object of this invention is the provision of a safety attachment for use in connection with a pistol for movement into or out of a position for preventing the actuation of the trigger of the pistol.

With the foregoing and other objects in view this invention consists in such novel features of construction combination and arrangement of parts as will be hereinafter more fully described, illustrated in the accompanying drawings and claimed.

In describing the invention in detail reference will be had to the accompanying drawings wherein like characters designate like or corresponding parts throughout the several views, and in which:—

Figure 1 is a sectional view through the pistol showing the various parts thereof in elevation. Fig. 2 is a top plan view of the pistol. Fig. 3 is a fragmentary bottom plan view showing the pistol handle or stock turned horizontally for cocking the pistol and ejecting a discharged shell. Fig. 4 is a detail perspective view of the trigger. Fig. 5 is a detail view partially in section of the discharged shell ejector. Fig. 6 is a detail perspective view of the cocking rod. Fig. 7 is a cross sectional view through the cocking post showing a fragment of the cocking rod in connection therewith. Fig. 8 is a detail perspective view of the locking mechanism for holding the barrel against horizontal swinging movement. Fig. 9 is an end view of the barrel, and Fig. 10 is a detail view of the firing pin. Fig. 11 is a detail perspective view of a spring used in the pistol construction.

Referring more particularly to the drawings, 1 designates the barrel section of the target pistol and 2 the stock section. The barrel section 1 and the stock section 2 are pivotally connected together by a post or sleeve 3. The post 3 is carried by a barrel supporting projection 4 which is formed on the stock 2. The post 3 extends upwardly through the barrel supporting extension 4 and it is held securely connected thereto by a collar 5 and a set screw 6. The set screw 6 extends inwardly into the post as is clearly shown in Fig. 1 of the drawings.

The post 3 extends upwardly into a cocking post or collar 7, which collar or post is connected to the barrel structure 1 for movement therewith when the barrel structure is swung horizontally upon the stock 2.

The barrel structure 1 includes the barrel 8, which is internally rifled as is shown at 9 to provide for the proper rotation of a bullet. The barrel 8 has its inner end reduced and seated in a block 10, which rides upon the upper horizontal surface of the barrel supporting projection 4 and with which the post or collar 7 is rigidly connected. The block 10 has a rear sight 11 secured upon the upper surface thereof, which coacts with the forward sight 12 for the proper aiming of the pistol.

The block 10 has an arcuate slot 13 formed in the under surface thereof in which rides a pin 14. The pin 14 extends upwardly from the upper horizontal face of the forwardly extending barrel supporting projection 4. The pin 14 riding in the slot 13 limits the swinging movement of the barrel structure 1.

The block 10 is provided with a recess 15 formed upwardly from the base of the same, in which recess is pivotally seated a pawl 16. The pawl 16 has a cam 17 which is engaged by a pin 18. The pin 18 is carried by the projection 4. The pawl 16 which is pivotally mounted upon a post 19' engages one end of the rod 19 which is slidably carried by the block 10 and has an

ejector 20 formed upon one end thereof. The ejector 20 is seated in a recess which is formed in the end of the block 10 and the barrel 8, and the upper edge of the same has an arcuate recess 21 formed therein to fit the recess 22 which is cut in the end of the barrel about the rifle bore 9′ of the barrel and the loading end or breech of the same. The end 23 of the ejector or ejecting block 20 is provided for engaging the rim of a cartridge (not shown) for forcing the same out of the barrel after it has been discharged and upon the horizontal swinging movement of the barrel structure 1. The rod 19 has the ejecting head 20 formed integrally therewith, and it is slidably seated in a collar 24. A spiral spring 25 is coiled about the rod 19 and has one end abutting the collar 24 and the other end abutting a pin 26. The spiral spring 25 normally returns the ejecting block 20 to the recess which is formed in the barrel breach and the block 10 as is clearly shown in Fig. 1 of the drawings. The cam 17 of the pawl 16 is formed so that when the barrel of the pistol is swung outwardly from the stock 2 as is shown in dotted lines in Fig. 2 of the drawings and in solid lines in Fig. 3, the pawl will be moved for forcing the rod 19 and the block 20 outwardly as is shown in Fig. 3 of the drawings for ejecting a spent cartridge from the bore 9′.

The block 10 has a recess 25 formed in the under surface thereof adjacent the rearward end of the block. The recess 25 is provided for receiving the upper end 26 of the locking lever 27. The locking lever 27 is pivotally mounted upon a pin 28 which is carried by the forwardly extending barrel supporting projection 4 and it is seated within a recess 29 which is formed in the projection 4, having the finger engageable portion 30 which has its under surface arcuate as is clearly shown in Figs. 1 and 8 protruding beneath the under surface of the projection. The lever 27 has an upstanding post 31 formed thereupon the upper end of which post forms the locking end 26 of the lever. The terminal of the post 31 which forms the locking lug 26 is tapered so that the under surface of the barrel block 10 will ride thereover when the barrel is being swung to a position in alinement with the stock 2 of the pistol. A V spring 32 is mounted in the recess 29 and it has lugs 33 and 34 formed upon the terminal ends of the legs thereof, one of which lugs is seated in a recess formed in the extension 4 and the other lug 34 rests upon a shoulder 35 which is formed on the lever 27. The V spring 32 is provided for automatically forcing the end 26 into the recess 25. When it is desired to swing the barrel structure 1 horizontally, for ejecting a cartridge from the barrel, the finger end 30 of the lever 27 is pressed upwardly compressing the V spring 32, which forces the vertical post downwardly causing the end 26 thereof to move out of the recess 25 after which the barrel may be swung by manual power.

The stock 2 of the pistol is hollow, as is ordinary in the construction of pistols and it has a hammer 37 pivotally mounted therein upon a pin 38 which extends transversely through the stock 2. The hammer 37 has one side of its rear edge cut away and a pin 39 is secured thereto and seated in the cut away portion. The pin 39 is seated in the arcuate end 40 of the main spring 41. The main spring 41 which actuates the hammer 37 is a flat spring, and it is bent downwardly through the hollow portion of the stock, having its lower end seated in a recess 42 formed in the metallic framework or skeleton of the stock and abutting a shoulder 43, which prevents the end of the spring from flying out of the recess 42. A set screw 44 is provided for regulating the tension of the main spring 41.

The cocking post or collar 7 is provided with a recess 45 formed in the contour thereof, the inner wall of which recess merges into the circumference of the post as is clearly shown in Fig. 7 of the drawings.

The recess 45 terminates in a shoulder 46. A cocking rod 47 is slidably mounted in the projection 4 and it has one end normally seated in the recess 45, and the other end protruding into the hollow portion of the stock 2 and abutting the shoulder 48 which is formed upon the forward face of the hammer 37 a short distance upwardly from the pivotal point 38 thereof. When the barrel structure 1 is swung horizontally, it moves the cocking post 7 synchronously therewith and causes the rod 47 to ride about the outer surface of the post, which forces the rod 47 toward the hammer 37, causing it to force the hammer rearwardly upon the pivotal point for cocking the hammer. When the post 7 has made a partial revolution the rod 47 will move into the recess 45 passing the shoulder 46 which will release the protruding end of the pin or rod from engagement with the shoulder 48.

The hammer 37 is held in a cocked position against the tension of the main spring 41 by a pawl 49, which pawl is pivotally mounted upon a pin 50 and has one end thereof reduced as is shown at 51 and seated in a recess 52 which is formed in the lowermost portion of the hammer. The terminal end of the pawl 49 engages a shoulder which is formed on the hammer 37 and holds the latter in a cocked position against the tension of the main spring 41. The pawl 49 is held in a position for holding the hammer 37 in a cocked position by

a spring controlled pin 53 which is carried by the trigger structure 54.

The trigger 54 is pivotally mounted between trigger guards 55 and it has a rearwardly extending arm 56 formed integrally therewith. The arms 56 extends into the hollow portion of the stock 2 and it has two upstanding lugs 57 and 58 formed on the upper surface of the end thereof. The lugs 57 and 58 are spaced from each other leaving a recess 59 between their facing sides. The lug 57 is positioned directly beneath the rear end of the pawl 49 and it engages the under surface of the rear end of said pawl when the trigger is pulled, forcing the spring controlled pin 53 inwardly into the opening in which it is slidably seated and forcing the end 51 of the pawl out of the notch formed in the under surface of the hammer 37, thereby releasing the hammer and allowing it to be forced forwardly by the main spring 41.

When the hammer 37 is forced forwardly by the main spring 41 it strikes the rear end of a firing pin 60. The firing pin 60 has a head 61 formed thereon, which head protrudes into the hollow portion of the stock 2 and is engaged by the hammer 37 for forcing the discharging end 62 of the pin through the opening 63 and into engagement with the cartridge or shell which is mounted in the bore 9′ of the barrel 8. A spiral spring 64 is coiled about the firing pin 60 and normally returns it to a position so that the head 61 thereof will protrude into the hollow portion of the stock for engagement by the hammer 37. The head 61 of the firing pin 60 has a slot 65 formed therein which receives the upper enlarged end of a flat spring 66. The flat spring 66 is secured to the front side of the hollow portion of the stock 2 by a screw or other suitable fastening device 67 and aids the spiral spring 64 in returning the firing pin to an operative position. The gun stock 2 has a slot formed in the upper surface thereof through which extends a bar 68. The bar 68 has a stock engageable plate 69 secured to the upper end thereof, which plate is slidably seated upon the exterior of the stock 2 for sliding the bar 68 forwardly or rearwardly for locking the trigger 54 against actuation. The bar 68 has its inner end reduced as is shown at 70, which inner end is provided for engagement with the lugs 58, as is clearly shown in Fig. 1 of the drawings for holding the trigger against action and preventing the accidental discharge of the pistol. The stock has the word "Safe" engraved thereon as is shown at 71 in Fig. 2 of the drawings to indicate when the bar 68 is in a trigger locking position. A flat spring 72 is secured to the inner surface of the rear wall of the stock 2 and it extends upwardly into the stock having a lug 73 formed on the under surface thereof which is engaged by a pin 74. The pin 74 is carried by the bar 68 and the engagement of the lug formed upon the flat spring with the pin 74 tends to hold the bar 68 and the plate 69 securely in the position to which it is moved and preventing accidental displacement of the same. The lug has its edges tapering so as to permit of comparatively free and easy movement of the bar 68. A second pin 75 is carried by the bar 68 and it engages the under surface of the upper wall of the stock of the pistol for guiding the movement of the bar 68.

The block 10 has a flange 77 formed on the rear end thereof which rides in a slot or groove 78 which is formed in the stock 2 and insures the proper positioning of the barrel structure 1 when in alinement with the stock 2.

The block 10 has a bore extending diagonally therethrough from the forward end of the same. The bore 80 is internally screw threaded for a section of its length and it is alined with a recess 81 which is formed in the under surface of the barrel 8 of the pistol so that when the plug or pin 82 is inserted in the bore the end 83 of the plug which is not screw threaded will feed itself in the recess 81 and the terminal end of the plug will abut the inner shoulder 84 of the recess, forcing the reduced portion of the barrel inwardly within the bore 10′ which is formed in the block 10 for receiving the barrel. The pin 82 has a swing ring 85 secured to its outer end to which may be attached any suitable sort of strap or the like if it is so desired to facilitate the carrying of the pistol. The barrel 8 has a screw 86 inserted in the upper side of the same which screw is provided for seating in a recess 87 which is formed in the end of the upper side of the block 10 for insuring the proper positioning of the barrel within the bore 10′.

In the operation of the improved target pistol heretofore described; when it is desired to cock the pistol, the lever 27 is rocked, by pressing upwardly upon the arcuate protruding portion 30 thereof, which forces the vertical upstanding post downwardly and moves the end 26 out of the recess 25 which is formed in the block 10. After the end 26 has been moved out of the recess 25, the barrel structure 1 is swung horizontally by manual pressure and the horizontal swinging of the barrel structure 1 will force the ejecting head 20 outwardly as is illustrated in Fig. 3 of the drawings, thereby ejecting a spent shell. The movement of the barrel structure will also rotate the cocking post 7, and slide the rod 47 longitudinally in the manner heretofore described, for forcing the hammer 37 rearwardly against the tension of the main spring 41.

After the hammer 37 has been cocked, and

a new shell placed in the bore of the barrel 8, the plate 69 is moved for moving the end 70 of the bar 68 out of engagement with the lug 58, thus permitting the actuation of the trigger 54 for releasing the hammer 37 in the manner heretofore described, for discharging a shell.

From the foregoing description taken in connection with the accompanying drawings the advantages of the construction and of the method of operation of the improved pistol will be readily apparent to those skilled in the art to which this invention appertains and, while in the foregoing description, the principle of the operation of this invention has been described together with various features of construction, it is to be understood that certain minor features of construction, combination and arrangement of parts may be altered to suit practical conditions provided such alterations are comprehended within the scope of what is claimed.

What is claimed is:—

1. In a pistol structure, a hollow stock, a hammer and trigger mechanism mounted in said stock, a barrel supporting projection formed integrally with the front end of said stock, a barrel carrying block mounted upon said projection, means pivotally connecting the barrel carrying block with the projection for horizontal swinging movement, a barrel positioned upon said barrel block, means mounted in the projection and engaging portions of the under face of the block for limiting outward movement of said barrel carrying block, and means extending longitudinally through the projection engaging the hammer and a cam on the pivot of the barrel carrying block for cocking said hammer upon horizontal swinging movement of said barrel carrying block.

2. In a pistol structure, a hollow stock, a barrel supporting projection formed integral with the front end of said stock, a hammer and trigger mounted in said stock, a barrel carrying block mounted upon said projection, a pivot pin extending upwardly through the projection, a collar mounted upon the under face of the barrel carrying block and mounted upon the pivot pin of the projection permitting the barrel carrying block to swing horizontally upon said projection, said collar provided in its side face with a cam recess, a cocking rod positioned longitudinally through the projection, one end engaging the recess in the collar and its opposite end engaging the hammer, whereby upon horizontal movement of the block the same will be forced rearwardly cocking said hammer, and means positioned in the under face of the block for ejecting the shell from the barrel upon horizontal swinging movement thereof, and means on the projection engaging the block whereby the horizontal movement of the block will be limited, and means in the projection engaging the block for preventing horizontal swinging movement of the same.

3. A pistol structure comprising a hollow stock, a hammer and trigger mounted in said stock, a barrel supporting projection formed integrally with the front end of said stock, a barrel carrying block mounted upon said projection, a barrel carried by said barrel carrying block, a collar secured to the under face of said block, a pivot pin extending up through the projection adjacent its forward end and pivotally journaled in said collar of the block and allowing the latter to swing horzontally thereupon, means in said projection for engaging the under face of said block for preventing horizontal swinging movement of the same, an extracting member carried by said block and means in said block for engaging the extractor for ejecting a shell upon horizontal swinging movement of said barrel carrying block, a rod slidable longitudinally through the projection one end engaging the collar and the opposite end engaging the hammer upon horizontal swinging movement of the barrel carrying block for cocking the hammer.

4. In a pistol structure, a hollow stock, a barrel supporting projection formed integral with the front end of said stock, a barrel carrying block mounted upon said projection and pivotally connected thereto for horizontal swinging movement, a barrel carried by said block, said barrel carrying block having a collar on its under face, a pin carried by the forward end of said projection to fit into said collar and allow the same to swing outwardly and horizontally, a hammer mounted within said stock, means in said stock for engaging said hammer for holding the same in a cocked position, a cocking rod slidable longitudinally through the barrel supporting projection one end engaging the collar and its opposite end engaging the hammer whereby upon horizontal swinging movement of said barrel the hammer will be cocked.

In testimony whereof I affix my signature in presence of two witnesses.

ROSS SEMPLE.

Witnesses:
THOS. L. COOK,
PAUL P. DENNIER.

**Copies of this patent may be obtained for five cents each, by addressing the "Commissioner of Patents, Washington, D. C."**