Apr. 3, 1923. 1,450,208

J. HANSON ET AL

ROCK DRILLING APPARATUS

Filed Oct. 6, 1920 2 sheets-sheet 1

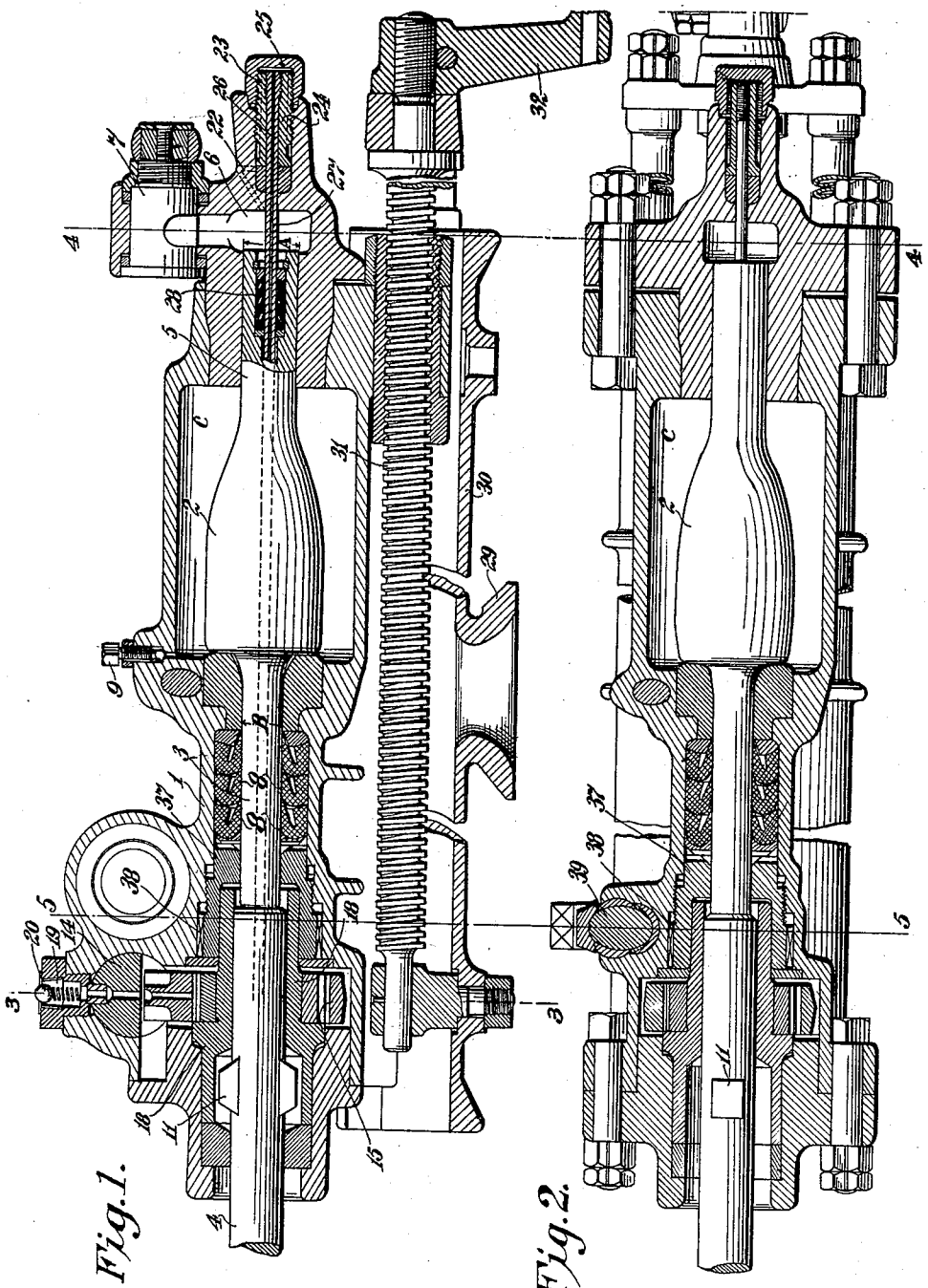

Fig. 1.

Fig. 2.

Inventors-
James Hanson and
Richard Greenwood Hanson
By- B. Singer, Atty.

Apr. 3, 1923. 1,450,208

J. HANSON ET AL

ROCK DRILLING APPARATUS

Filed Oct. 6, 1920 2 sheets-sheet 2

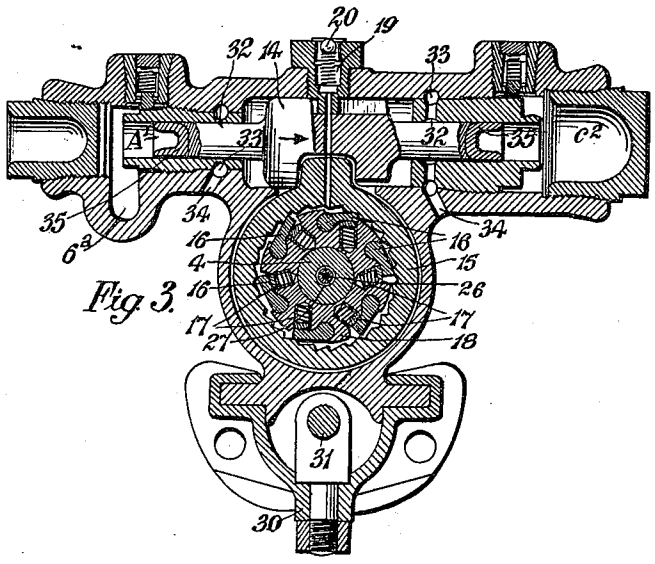

Fig. 3.

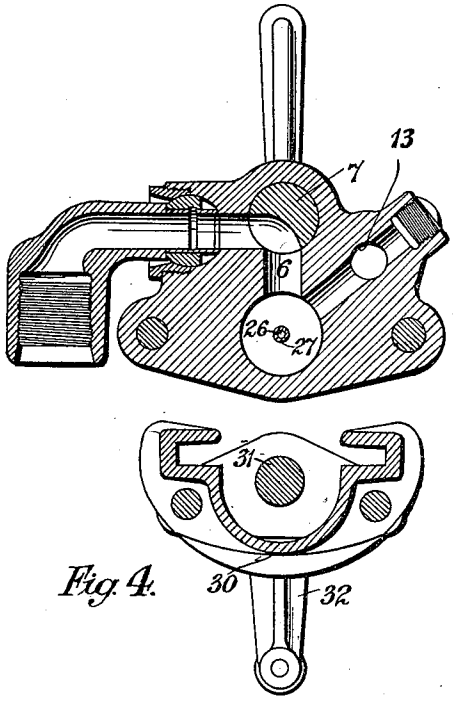

Fig. 4.

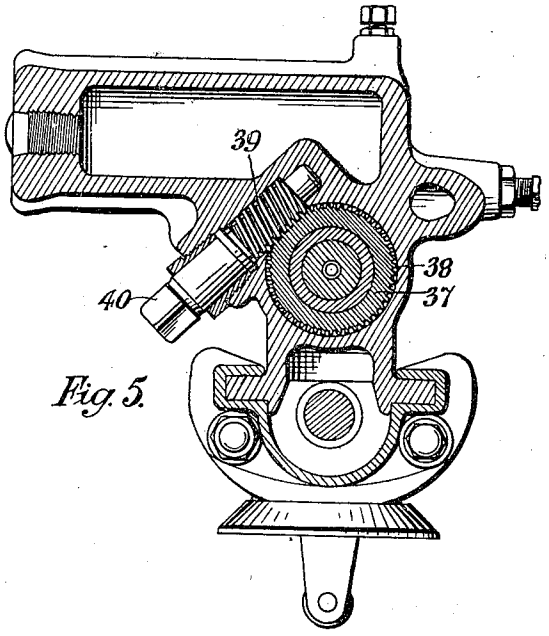

Fig. 5.

Inventors -
James Hanson and
Richard Greenwood Hanson
By- B. Singer, Atty.

Patented Apr. 3, 1923. 1,450,208

UNITED STATES PATENT OFFICE.

JAMES HANSON AND RICHARD GREENWOOD HANSON, OF STAFFORD, ENGLAND.

ROCK-DRILLING APPARATUS.

Application filed October 6, 1920. Serial No. 415,119.

To all whom it may concern:

Be it known that we, JAMES HANSON and RICHARD GREENWOOD HANSON, subjects of the King of Great Britain, and residents of Stafford, in the county of Stafford, England, have invented certain new and useful Improvements in and Relating to Rock-Drilling Apparatus (for which we have filed application for patent in Great Britain #19,581, dated August 8, 1919), of which the following is a specification.

This invention relates to improvements in and relating to rock drills and has reference particularly to rock drills for use in wave transmission systems operating in accordance with the principles enumerated in the specification of Letters Patent No. 9029 of 1913.

The primary object of the invention is to provide a rock drill in which metallic springs are eliminated and a further object is to provide a rock drill in which a rotary as well as a percussive motion will be imparted to the drill steel.

The invention therefore consists broadly of a rock drill having its hammer member suspended between liquid columns or capacities.

The invention further comprises the provision of a separate wave transmission motor operated from the line for effecting rotary motion of the drill and the provision of means for permitting a stream of water from the line to pass through the drill steel for flushing purposes.

In the accompanying drawings we have illustrated our invention Fig. 1 being a longitudinal section of one form of a rock drill constructed in accordance with our invention. Fig. 2 is a sectional plan of Fig. 1, Fig. 3 is a transverse section on the line 3—3 of Fig. 1, Fig. 4 is a section on the line 4—4 of Figs. 1 and 2 and Fig. 5 is a section on the line 5—5 of Figs. 1 and 2.

Referring to these drawings the numeral 1 designates the body of the drill which is preferably a casting or forging in which a capacity C is formed. An opening closed by a plug may be provided for initially charging the capacity C but it will be found in practice that it will automatically become charged by leakage from the inlet capacity 6 between the end 5 of the hammer member 2 and its support which it will be noticed is not provided with packings. In this capacity the reciprocating hammer member 2 is suspended the forward end 3 operating upon the drill steel 4 while the rear end 5 is open to the pipe line pressure which is admitted at the inlet 6 under control of the cock 7. The forward end 3 of the hammer member 2 is packed as at 8 to prevent or minimize leakage from the capacity C. The capacity C is provided with an air release valve 9 through which air from the capacity C is exhausted prior to starting up. The arrangements must be such that the maximum mean and minimum pressures in the capacity C must equal the maximum, mean and minimum pressures in the line.

The action of the hammer member 2 can be readily understood and may be briefly stated as follows:—

Assuming the inlet 6 to be open to the line—which is of course connected up to a wave transmission generator which creates pressure waves in the liquid in manner now well known—the pressure acting on the area A forces the hammer member 2 into the capacity C which causes the pressure in the capacity C to rise to its maximum due to the compression of the liquid contained in the closed capacity C. Immediately the pressure of the wave in the line falls below mean pressure this maximum pressure in the capacity acting on its area of the hammer member—which is the annulus constituted by the difference in area between the area A and the area B—causes the hammer member to return after striking its blow.

The force due to the mean pressure in the line acting on the area A equals the force due to the maximum pressure in the capacity C acting on the area of the annulus A—B. It therefore follows that the hammer member 2 reaches its striking position—its extreme forward position—when the pressure in the line has risen from minimum pressure to mean pressure and the hammer member continues in this position—that is to say the blow endures—until the pressure in the line has risen from mean pressure to maximum pressure and fallen again to mean pressure. When however the pressure in the line gets below mean pressure the maximum pressure in the capacity C acting on the annulus A—B returns the hammer member 2 ready for the next blow. It will be understood that the above action occurs in respect of every pressure wave so that with a frequency of 2,300 waves per minute, which is a satisfactory frequency, the hammer mem-

ber 2 is reciprocated 2,300 times and 2,300 blows are struck.

The drill steel 4 is rotated continuously by the pressure wave in the system through an independent wave motor which synchronizes with the hammer blows and is illustrated best in Fig. 3. The drill steel 4 is provided with lugs or dogs 11 which clutch it to the rotating pawl carrying chuck 18. The wave enters at 6^a from the line through the passage 13 and acts on the area A' forcing the saddle piece 14 in the direction of the arrow. This action compresses the liquid in the capacity C^2 and at the same time moves the ratchet ring 15. Pressure in the line synchronizes in this example with the pressure in the capacity C^2 maximum pressure in the line equalling maximum pressure in the capacity C^2, and directly the pressure in the line falls the pressure in the capacity returns the saddle piece 14 and the pawls 16 controlled by the springs 17 are engaged and the chuck 18 which carries the pawls 16 is rotated and rotates the drill steel with which it is engaged by means of the lugs or dogs 11 as before described, the rotary movement of the drill taking place during the return stroke of the hammer member 2. An opening 19 closed by a spring pressed ball 20 is provided for lubrication purposes and openings 32, 33 and 34 permit of the escape of any leakage which may pass the packings 35. The cleansing or flushing water passes from the inlet 6 through suitable passages indicated by the numeral 22 to passages 23 formed by flats on the plug 24 and passes thence to the chamber 25 and thence down the central hole 26 in the pipe 27 which passes through the centre of the hammer member 2, suitable packing 28 being provided to prevent leakage from the line inlet 6 and it will be understood that a hole is provided longitudinally of the drill steel through which the liquid passes to the point of the drill. The drill body as a whole is supported by the circular boss 29 which is formed integral with the cradle or shell 30 in the usual manner and the feeding of the drill during the drilling operation is effected by means of the feed screw 31 operated by the handle 32 in known manner.

A detail of some practical importance consists in the means employed for adjusting the packing 8 from outside the drill so that adjustment can be made at any time during the ramming of the drill without dismantling. This arrangement consists of a screw gland 37 having a worm wheel 38 integral with it and this worm wheel 38 is in gear with a worm 39 which can be rotated by a handle or key applied to the nut 40 shown clearly in Fig. 2 and 4, and it will be readily seen that rotation of this worm 39 will cause rotation of the gland 37 and the consequent adjustment of the packing.

What we claim and desire to secure by Letters Patent is:—

1. In a wave transmission rock drill, a reciprocating hammer member suspended in resonance between liquid columns, and a wave transmission motor operated by connection to the wave transmission line for imparting rotation to the drill steel, substantially as specified.

2. In a wave transmission rock drill, a reciprocating hammer member suspended in resonance between a column of liquid in a capacity formed in the drill body and a column of liquid adapted to be connected to the wave transmission line, and a wave transmission motor operated by connection to the wave transmission line for imparting rotation to the drill steel, substantially as specified.

3. In a wave transmission rock drill, a reciprocating hammer member suspended in resonance between liquid columns, a pipe passing centrally through the hammer member and connection passages from the inlet capacity of the drill to said pipe whereby water for flushing is supplied from the wave transmission line, substantially as specified.

4. In a wave transmission rock drill, a reciprocating hammer member suspended in resonance between a column of liquid in a capacity formed in the drill body and a column of liquid adapted to be connected to the wave transmission line, a pipe passing centrally through the hammer member, and connection passages from the inlet capacity of the drill to said pipe whereby water for flushing is supplied from the wave transmission line, substantially as specified.

5. In a wave transmission rock drill, a reciprocating hammer member suspended in resonance between liquid columns, packings through which the forward end of the hammer member slides, a screw gland adapted to be rotated to adjust said packing, a worm wheel integral with said gland and a worm gearing with said worm wheel and adapted to be rotated from outside the drill body, substantially as specified.

In witness whereof we affix our signatures.

JAMES HANSON.
RICHARD GREENWOOD HANSON.