Dec. 15, 1964 R. A. LOESCHER 3,161,336

CELLULOSIC PRODUCT

Filed July 25, 1962 3 Sheets-Sheet 1

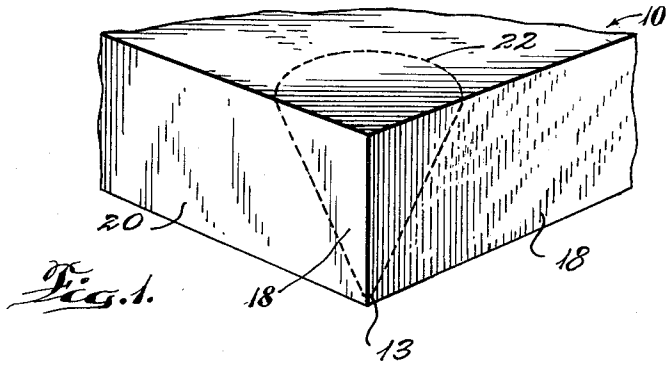

Fig. 1.

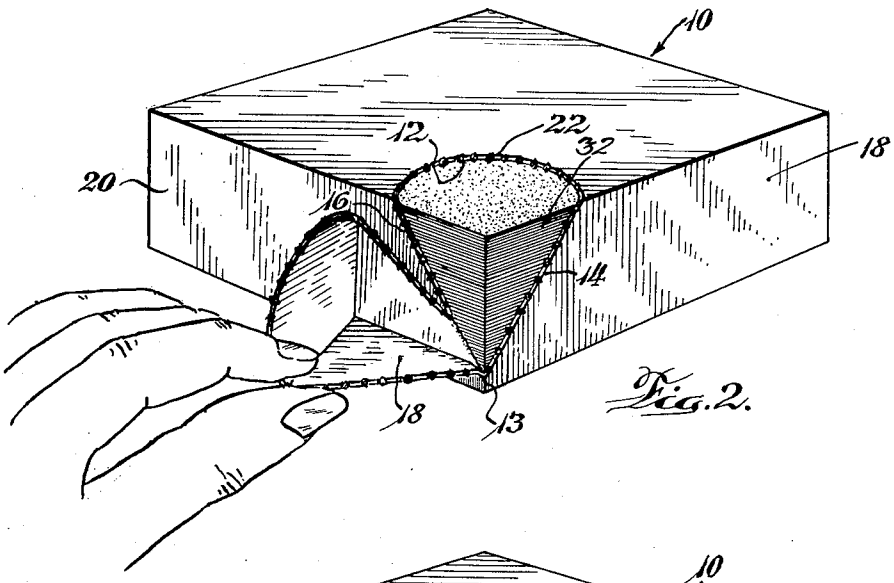

Fig. 2.

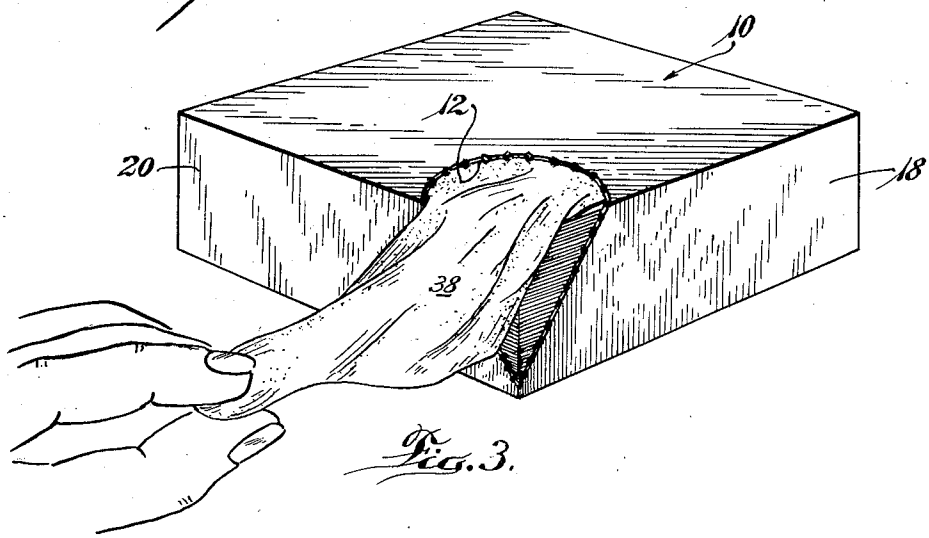

Fig. 3.

Dec. 15, 1964 R. A. LOESCHER 3,161,336

CELLULOSIC PRODUCT

Filed July 25, 1962 3 Sheets-Sheet 2

Fig. 4.

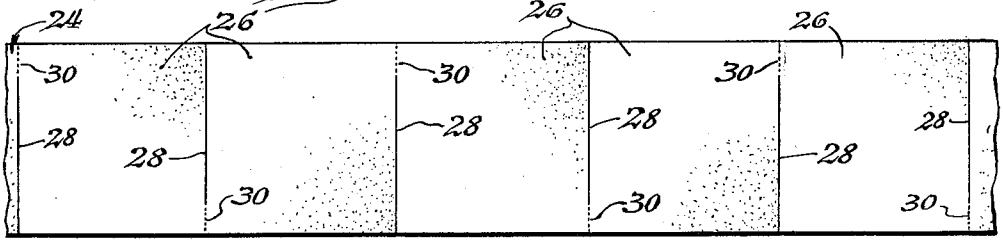

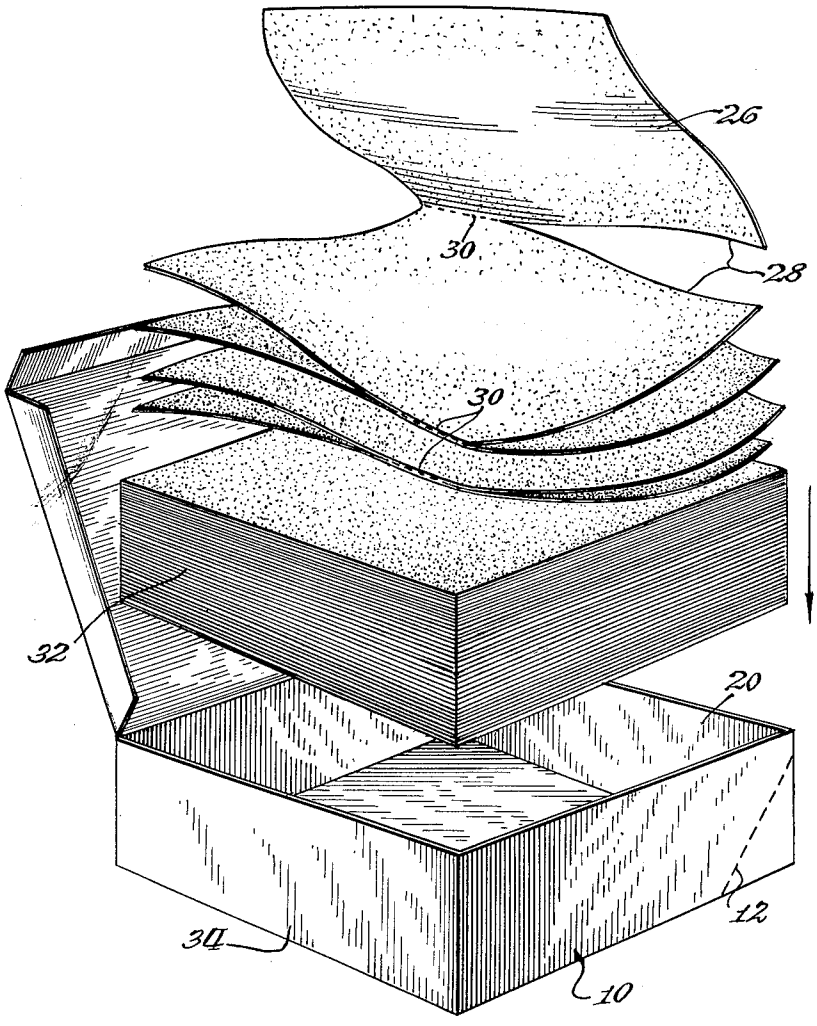

Fig. 5.

Dec. 15, 1964 R. A. LOESCHER 3,161,336

CELLULOSIC PRODUCT

Filed July 25, 1962 3 Sheets-Sheet 3

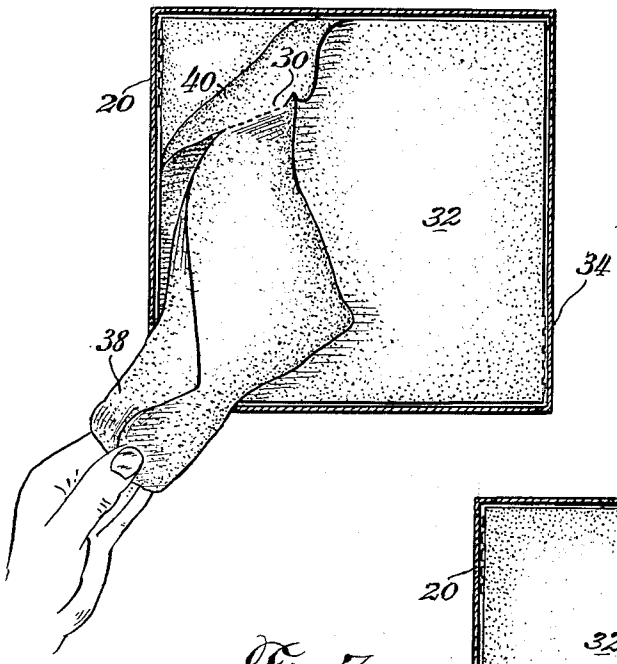

Fig. 6.

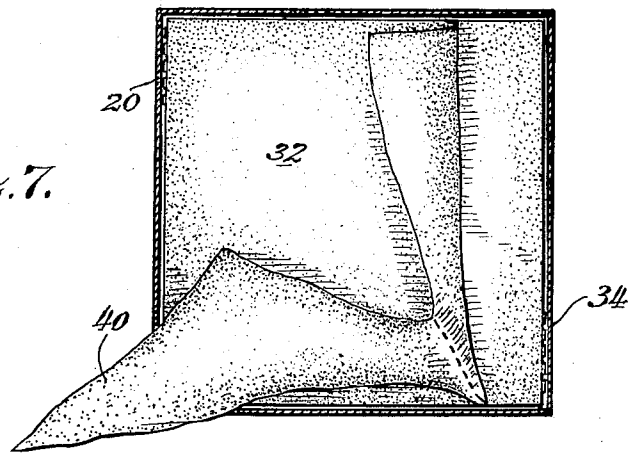

Fig. 7.

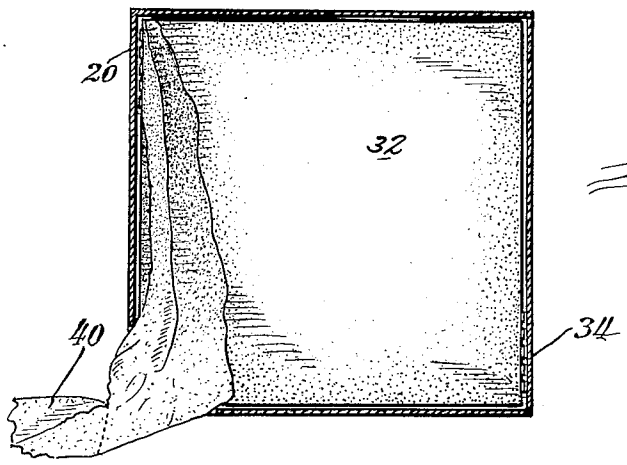

Fig. 8.

United States Patent Office 3,161,336 Patented Dec. 15, 1964

3,161,336
CELLULOSIC PRODUCT

Richard A. Loescher, Appleton, Wis., assignor to Kimberly-Clark Corporation, Neenah, Wis., a corporation of Delaware

Filed July 25, 1962, Ser. No. 212,231
6 Claims. (Cl. 225—106)

This invention relates to improvements in sheet dispensing cartons, and more specifically to the combination of an improved dispensing carton and an enclosed stack of sheets interbonded in a manner for optimum individual dispensing therefrom.

An important object of the invention is to provide an improved carton for the sequential dispensing of individual sheets housed therein in flat rather than in folded configuration but marginally interbonded one to the other in a patterned configuration.

Another object is to provide a carton with an improved dispenser opening which permits individual sheet extraction from a corner location with minimum resultant crumpling or wrinkling.

Another object is to provide improvements in the marginal interbonding of a stack of tissues particularly adapted to be dispensed from the carton herein taught.

Other objects and advantages will become apparent to persons skilled in the art upon examination of the drawings and description.

In the drawings, in which like parts are identified by the same reference numeral,

FIG. 1 is a fragmentary perspective view of a carton incorporating the invention.

FIGS. 2 and 3 are perspective views of the carton of FIG. 1 illustrating respectively manual removal of a corner portion to provide a dispensing opening and sheet withdrawal through that opening.

FIG. 4 is a plan view of elongate sheet stock transversely cut and perforated prior to being overfolded to provide a tissue stack such as shown partially exploded in FIG. 5.

FIG. 5 illustrates in perspective a partially exploded stack of tissues interbonded in a manner shown in FIG. 4 and positioned for deposit in an inverted carton incorporating the invention.

FIG. 6 is a plan view of a carton incorporating the invention, the top wall of which has been removed to best illustrate the sheet withdrawal.

FIGS. 7 and 8 are views similar to FIG. 6 illustrating subsequent stages during sequential sheet withdrawal from the carton.

As best shown in FIGS. 2 and 3, a boxboard carton 10 is provided with an opening 12 marginally defined by perforations or the like which extend continuously through corner portions of the top and adjacent side walls. Opening 12 is preferably defined by a pair of lines of weakening 14, 16 diverging upwardly, as shown, in a generally V configuration from a position adjacent a lower corner 13 to upper margins of respective side walls 18, 20, the upper ends of said V configuration being interconnected by an extension of said weakening lines 22 extending arcuately through a corner portion of the top wall.

As best shown in FIG. 2, the marginally defined corner dispensing opening 12, resulting from manual removal of the corner area marginally defined in FIG. 1, provides an aperture somewhat "top"-shaped in configuration as viewed. While the opening shown is a preferred form, the invention contemplates corner openings of modified configuration. The opening must however be of a size to subject individual tissue sheets, during extraction, to constrictive forces sufficient to insure breakage of intersheet bonds, as later described.

As best shown in FIG. 4, a strip of sheet material 24, such as creped fibrous tissue suitable for use as napkins, towels, handkerchiefs or the like, is divided into successive rectangular panels 26 by partially cut and partially perforated transverse margins each consisting of major cut segments 28 and minor perforated segments 30. The cut and perforated segments are positioned respectively in a staggered manner marginally of successive panels. Hence each panel is marginally defined by both a cut segment 28 extending over a major portion of the transverse sheet width and a perforated segment 30 extending therefrom to the opposite margin of the sheet. Cut segments thus extend in a repetitive pattern from opposite side margins of the strip at opposite ends of each panel.

FIG. 5 illustrates the manner in which strip 24, FIG. 4, is folded along successive panel margins to form stack 32 for deposit in carton 10. Stack 32 thus consists of a plurality of tissue sheet panels 26 each of which is partially separated by cut segments 28 while being lightly bonded one to the other by remaining minor perforated segments 30. With panels 26 reversely overfolded, as shown in FIG. 5, the successive panels remain marginally connected along diagonally opposed corner portions while the two remaining diagonally opposed panel corner portions remain free of interbonding as best shown by the exploded upper portion of the stack. It will be noted that the stack will be so positioned within carton 10 that the diagonally opposed non-interbonded corner portions are placed adjacent opening 12 and the corner diagonally thereof, and as a result thereof the interbonded corner portions lie along portions of walls 34, 20 respectively in substantial spaced relationship to opening 12.

As best shown in FIGS. 6, 7 and 8, interbonded portions of the stack 32 lie respectively along the uppermost portion, as shown, of wall 20 and along the lowermost portion, as shown, of wall 34 and though the vertically registered interbonded stack portions are not in truly symmetrical relation to opening 12, they are so positioned that upon sequential withdrawal of an individual sheet an interconnected lower sheet is drawn by a leading sheet substantially across one dimension of the carton to arrive at opening 12. Thus as the uppermost sheet 38 of stack 32 is initially withdrawn through opening 12, the portion thereof interbonded to a contiguous lower sheet 40 may be drawn somewhat outwardly of a corner portion of wall 20 into somewhat the position shown in FIG. 6. As sheet 38 continues toward opening 12 it is peeled from the stack as lower sheet 40 is drawn therewith into and partially through opening 12. Upon complete extraction of sheet 38, interbond 30 is broken, leaving a corner portion of the trailing sheet 40 extending outwardly of opening 12, as shown in FIG. 7, to facilitate subsequent extraction thereof. The strength of the interbond is controlled by known methods of perforation and is such that the bond will tear only after a portion of the trailing sheet 40 has been drawn through opening 12. Subsequent withdrawal of the sheet shown trailing in FIG. 6 and leading in FIGS. 7 and 8 in turn peels off the next lower sheet as the intermediate bonding portion is drawn transversely of the bottom wall, as shown, and partially through opening 12 to be broken as shown in FIG. 8, upon full extraction of sheet 40. A subsequent sheet extraction repeats the cycle with successively withdrawn sheets peeling off underlying sheets from alternate corners of the stack, each of which is substantially spaced from opening 12.

While the drawings illustrated and the above description are directed to the preferred embodiment of the invention, persons skilled in the art will readily appreciate that the concepts herein taught will find application in modified structure permitting sequential withdrawal of

the individual sheets which are not individually folded as housed in the carton. Such sheets will therefore readily assume, after withdrawal, a flat configuration without crease lines. The optimum extent of intersheet bonding is such as to permit the employment of a corner aperture of sufficient size to minimize sheet wrinkling during extraction while insuring proper bond breakage with the trailing sheet extending sufficiently outwardly of the opening to permit convenient access thereto for subsequent extraction.

In the claims:

1. In combination, a rectangular carton, including top, bottom, end and side walls, said carton provided with a corner aperture marginally defined by relieved portions of said top wall and adjacent side and end walls of said corner, and a stack of lightly interbonded and reversely and flatly overfolded tissue sheets disposed within said carton and sequentially dispensable through said corner aperture, said tissue sheets being disposed one over another in flat uncreased configuration in said stack, and being interconnected with each other only by minor perforated segments along alternate marginal edges of said reverse overfolds.

2. The carton of claim 1 wherein said aperture is defined by side and end wall margins symmetrically diverging upwardly from one corner of the carton to the upper margins of adjacent side and end walls to define a V-shaped opening leading into an interconnected top wall aperture marginally defined in the adjacent corner area of said top wall.

3. The carton of claim 2 wherein the side and corner end wall margins defining said V-shaped opening are in registry, at the upper wall margins, with an arcuate top wall margin to define a corner opening of generally "top"-shaped configuration.

4. In combination, a rectangular tissue carton including top, bottom and side walls and provided in a corner thereof with a tissue dispensing opening formed by the removal of adjacent portions of the connecting top and side walls of said corner, a stack of flat uncreased tissue sheets disposed in said carton with said sheets being marginally interbonded only along opposite stack margins with the bonds defining fold lines confined to minor portions of the sheet width and positioned adjacent diagonally disposed corners of the stack, said fold lines being in overlying relation and the stack being positioned in the carton to place said fold lines along those diagonally disposed carton corners spaced from said aperture defining corner.

5. The combination with a rectangular carton provided with means for the easy removal of portions defining an upper corner thereof to provide a dispenser opening, of a stack of tissues contained therein to be sequentially dispensed through said opening, said stack comprising an elongate tissue strip transversely cut alternately from opposite strip margins with said cuts extending through major portions of the strip width and leading into lines of weakening extending through the remaining portions of the strip marginally to define a series of flat increased sheets interconnected in the areas of said lines of weakening, the sheets thus defined being continuously over-folded, one on the other along said lines of weakening with resulting fold lines in vertical registry and positioned diagonally of opposite stack margins, said stack being positioned in said carton with said diagonally disposed fold lines adjacent that pair of diagonally disposed carton corners both spaced from said aperture defining corner.

6. In combination, a rectangular carton of substantially square configuration in plan, a stack of flat substantially square tissue sheets disposed in said carton, said sheets being interbonded along minor portions of opposite stack margins forming fold lines disposed in vertical registry adjacent diagonally disposed corner portions of the carton, and a dispensing opening provided in a corner of the carton spaced from said diagonally disposed corners and marginally defined by portions of the connecting top and side walls forming an upper corner of the carton, whereby sequential dispensing of an uppermost sheet from said stack through said opening effects the withdrawal of the adjacent underlying sheet first from one and then from the other of said diagonally disposed positions of sheet interbonding.

References Cited in the file of this patent

UNITED STATES PATENTS

1,878,399	Hope	Sept. 20, 1932
2,050,394	Straubel	Aug. 11, 1936
2,115,673	Stompe	Apr. 26, 1938
2,257,340	Jacobsen	Sept. 30, 1941
2,529,853	Taggart	Nov. 14, 1950
3,012,692	Petersen	Dec. 12, 1961