Nov. 28, 1939. B. G. CROSS 2,181,597

FURNACE HEAT ECONOMIZER

Filed May 8, 1937 3 Sheets-Sheet 1

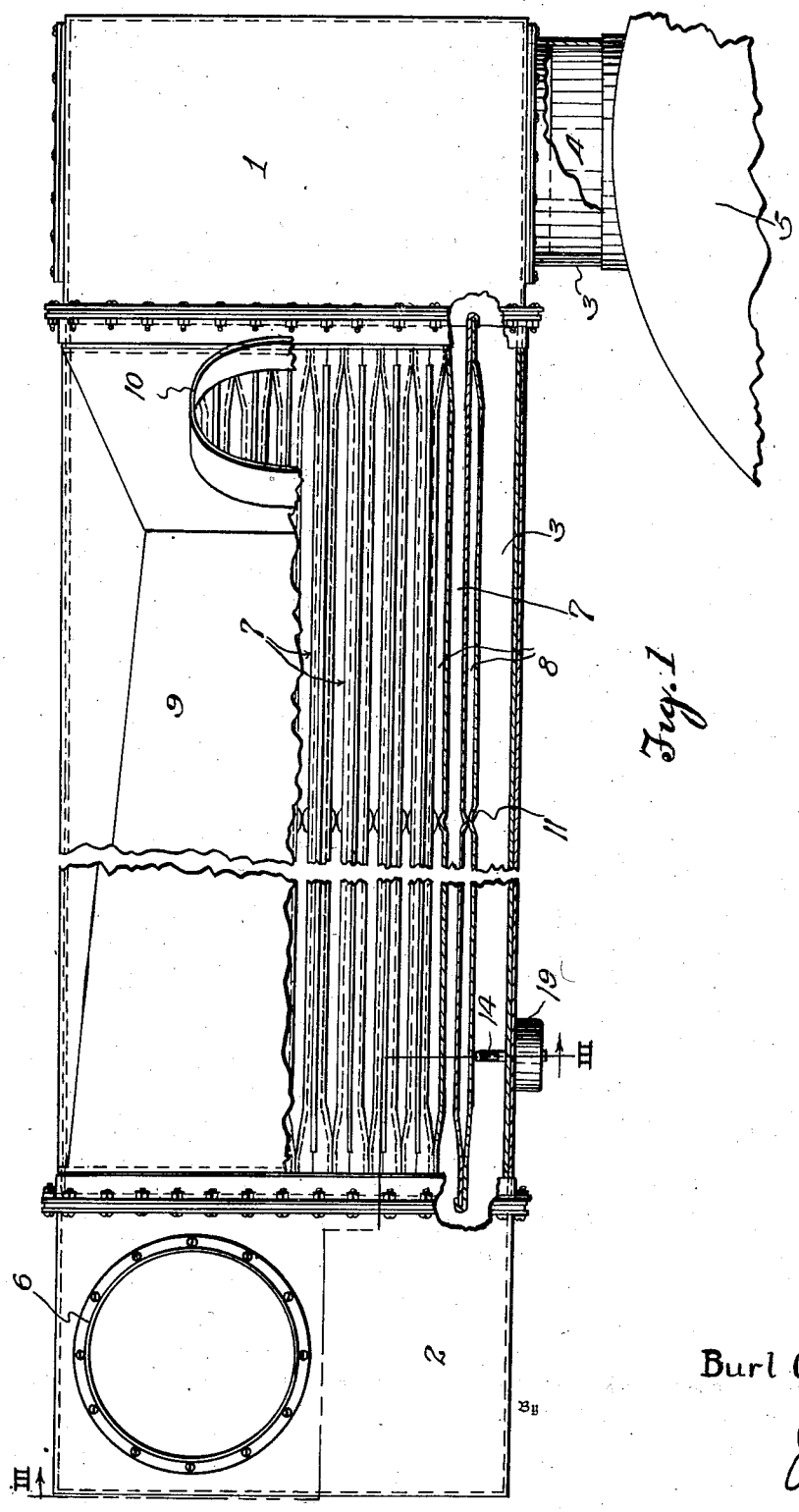

Fig. 1

Inventor
Burl G. Cross

J. S. Murray
Attorney

Nov. 28, 1939. B. G. CROSS 2,181,597

FURNACE HEAT ECONOMIZER

Filed May 8, 1937 3 Sheets-Sheet 2

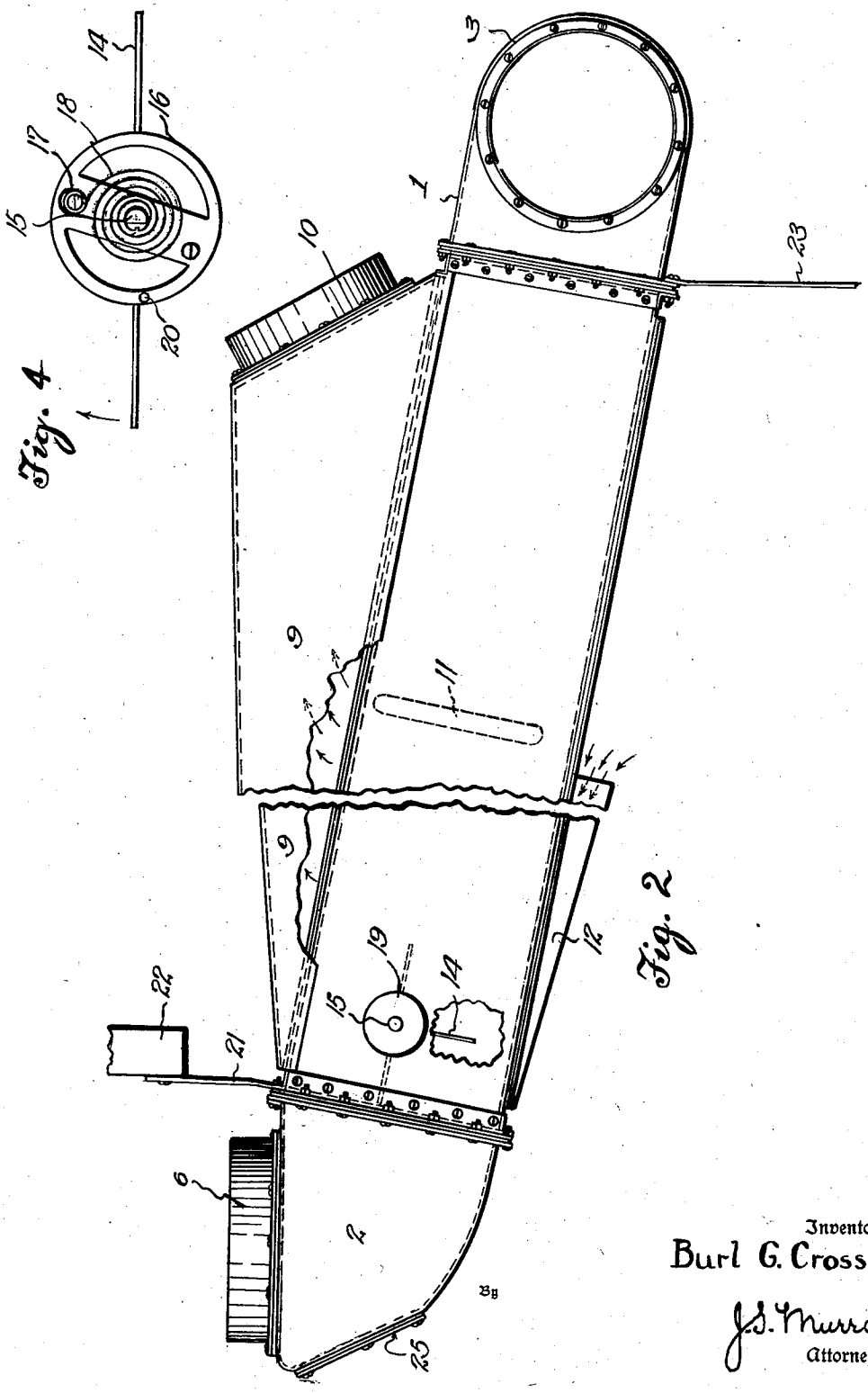

Fig. 4

Fig. 2

Inventor
Burl G. Cross

By J. S. Murray
Attorney

Nov. 28, 1939. B. G. CROSS 2,181,597

FURNACE HEAT ECONOMIZER

Filed May 8, 1937 3 Sheets-Sheet 3

Fig. 3

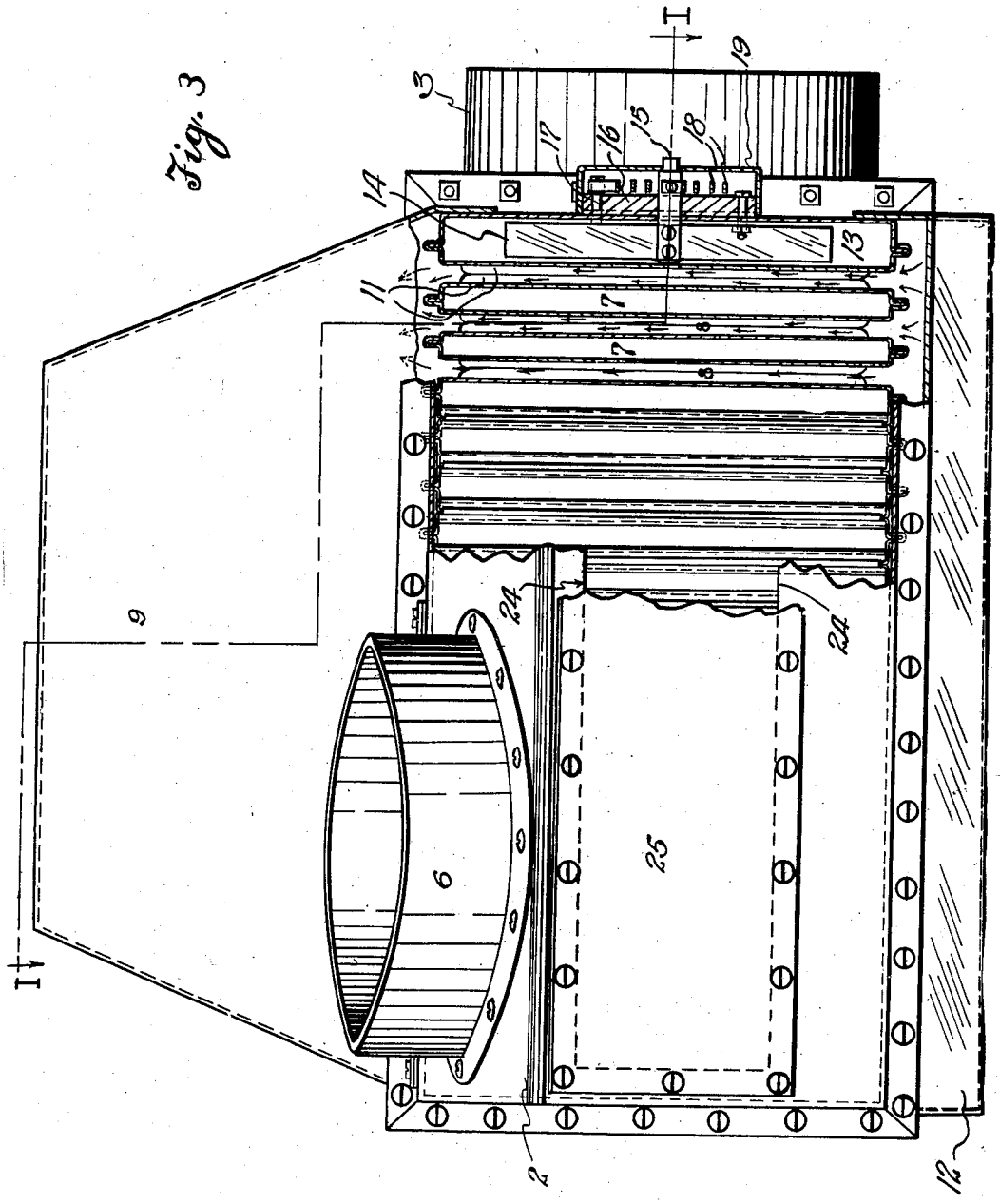

Inventor

Burl G. Cross

By

J. S. Murray

Attorney

Patented Nov. 28, 1939 2,181,597

UNITED STATES PATENT OFFICE

2,181,597

FURNACE HEAT ECONOMIZER

Burl G. Cross, Lansing, Mich.

Application May 8, 1937, Serial No. 141,477

7 Claims. (Cl. 257—245)

This invention relates to heat economizers and particularly to economizers of furnace heat.

In present practice, an unduly large proportion of the heat generated by furnaces discharges up the chimney with smoke and gases, being thus wasted. This inefficient practice prevails both in heating plants and power plants, the former being particularly wasteful.

An object of the invention is to provide a heat interchanging unit comprising a plurality of furnace gas flues and air (or other fluid) passages intervening between such flues, such unit being readily attachable to the smoke and gas outlet of a furnace, or insertable in a pipe leading from such outlet.

Another object is to equip such a unit with a preheating flue or gas passage, considerably larger in capacity than the first-mentioned flues, and to install in such passage a damper which may be opened in starting a furnace or bringing it up to a proper operating temperature, so that hot gases may flow freely through the economizer, smoke pipe, and chimney, the damper then being closed, to give the economizer full effect.

A further object is to establish a thermostatic control of the aforementioned damper, so that it will automatically open and close accordingly as the economizer drops below or rises to a normal operating temperature.

These and various other objects are attained by the construction hereinafter described and illustrated in the accompanying drawings, wherein:

Fig. 1 is a top plan view of the economizer, partially in section on the line I—I of Fig. 3.

Fig. 2 is a side elevational view of the economizer.

Fig. 3 is an end view, partially in section on the line III—III of Fig. 1.

Fig. 4 is a detail view, in front elevation, of the thermostat, its cover being removed.

In these views, the reference characters 1 and 2 designate respectively an inlet and an outlet header for furnace smoke and gases, the inlet header carrying a fitting 3 opening thereinto for engaging the outlet 4 of a furnace 5, and the outlet header carrying an upwardly directed discharge fitting 6 for connection to a smoke pipe. Connecting said headers is a suitable number of elongated sheet metal flues 7, laterally spaced apart to form passages 8 for the upflow of air. The walls intervening between said flues and air passages are parallel and preferably vertical, and provide a large surface area, as compared to the capacities of the flues and air passages, thus assuring a considerable heat conduction from the flue gases to the upflowing air. In the aggregate, however, the capacity of the flues sufficiently exceeds that of the furnace outlet to afford the gases a reasonably free flow. The air passages 8 are fully open at the bottom of the economizer to afford a free rise of air, such air being delivered to a hood 9 surmounting the economizer and equipped with a suitable outlet fitting 10. From the latter, such air is delivered by a pipe (not shown) to any desired point of use.

It is, of course, necessary to close the air passages, where they adjoin the headers 1 and 2, for the exclusion of smoke and gases, and preferably this closure is effected by gradually bringing together the walls of each air passage in close proximity to each header, as is best seen in Fig. 1. In addition to closing the air passages, this has the effect of forming the gas flues 7 with flaring inlets and outlets, such as considerably facilitate the entry of smoke and gases to and their exit from the flues.

Air rising through the passages 8 takes up more heat and acquires greater consequent velocity in the portions of such passages adjacent to the header 1, and consequently the air rising in said passages remotely from said header, tends to deflect toward the latter. It is desirable to counteract this tendency, as otherwise the dissipation of heat from the flues will be inadequate, in their portions remote from the header 1. It has been found that by partitioning the air passages 7 vertically at one or more points of their length, the desired result may be accomplished. Thus in the illustrated structure, partitions are formed, midway of the economizer length, by indenting the walls of each air passage toward and against each other as indicated at 11, the indentations being sufficiently elongated vertically to form the desired partitions. Said indentations further act as spacers for the air passage walls, resisting warping of such walls, and strongly reinforcing the midportion of the economizer.

Air rising through the hotter portions of the economizer exercises an injector effect on the cooler portions thereof, tending to draw up a greater volume of air through the latter portions than may be properly heated. Such air would, of course, exercise an undue cooling effect on the air rising through the hotter portions, and it is hence desirable to restrict air admission to the cooler portions. Thus, it is preferred to arrange beneath the economizer, and between its midportion and the header 2, an air inlet fitting 12, formed of sheet metal and having its

inlet substantially below said midportion, as best appears in Fig. 2. Said fitting communicates with all of the air passages and limits the entering air to a volume such as may derive a material degree of heat from the adjacent gas flues, and directs incoming air in the approximate direction of flow of the furnace gases.

When the temperature of the economizer, smoke pipe, and chimney is quite low, as is usually the case in starting a furnace or in bringing it up to an operating temperature, it is undesirable to permit the economizer to exercise its full cooling effect on the gases, since there would result inadequate draft, undue back pressure, and possibly an objectionable condensation of water or other elements of the gaseous mixture. For starting purposes, therefore, the invention provides a preheating flue 13 connecting the headers 1 and 2, of considerably larger capacity than the flues 7. While the preheating flue may extend in any desired relation to the flues 7, it is preferred to extend it, as shown, along one side of the battery of flues and air passages, its height and length conforming to those of the flues 7 but its width being considerably greater. Control of the preheating flue is exercised by an elongated damper 14, fixed midway of its ends upon a stub shaft 15, projecting into the flue 13 approximately midway of the height of such flue. Said shaft is journaled in the circular base 16 of a thermostat secured exteriorly to the flue 13, said base further carrying a pin 17, anchoring the outer end of a spiral thermo-expansive strip of metal 18, secured at its inner end to the shaft. A casing 19 normally embraces the base 16, covering the strip 18 and journaling the stub shaft. When the thermostat is cold or only moderately heated, the damper occupies its open position shown in dash lines in Fig. 2, this position being determined by engagement of the damper with a pin 20 projecting into the flue 13 from the base 16. Upon a predetermined rise of the thermostat temperature, the accompanying expansion of the spiral strip 18 effects a ninety degree rotation of the shaft 15 and thereby establishes the closed position of the damper, as shown in full lines in Fig. 2. In such position, the pin 17 serves as a stop for the damper. It is to be noted that the damper is not adapted, in closed position, to fully obstruct the flue 13, sufficient flow being afforded in such position, to render said flue substantially equivalent in effect to one of the flues 7.

Any suitable supports may be associated with the described economizer, as for example the hanger rod 21, suspending the outlet end from a ceiling joist 22, and a brace rod 23 rising from the floor, beneath the inlet end.

A cleanout opening 24 is preferably formed in the header 2, being closed normally by a plate 25. Through such opening a brush or the like (not shown) may be operated throughout the length of the flues.

The temperature at which automatic closing of the damper 14 occurs depends considerably on the type of fuel employed. For an oil-burning installation, it has been found satisfactory to effect closure at between 100 and 160 degrees F. Preheating to a somewhat higher temperature is desirable for gas, and for solid fuels still higher preheating temperatures are preferable.

The economy of heat and fuel effected by the described apparatus is indicated by the fact that in a test installation, smoke pipe temperatures which previously averaged 600 degrees F. were reduced to an average of 105 degrees, with no detriment to combustion, and with a fuel saving exceeding 25 per cent.

Avoidance of baffles acting on the discharging gases is believed an important factor in efficiency of the described economizer, since baffle installations entail materially increased resistance to flow, whereas the described construction affords the gases an even freer flow than would the smoke pipe section, which the economizer replaces. Any leakage of smoke or gases is avoided by employing joints sealed either by lap bends or by welding.

The preheating provision is also a feature of vital importance since, in absence of same, the cooling effect of the economizer would reduce the draft to a degree inadequate for starting conditions.

It is to be noted that the preheating flue 13 is at one side of the remaining flues, and that the outlet 6 of the outlet header is formed in the partition of such header adjacent the other side of the remaining flues. This secures the advantage that gases discharging from the preheating flue into the outlet header must flow past the outlets of the remaining flues in passing to the outlet 6 and hence act to induce a flow to the outlet header from the remaining flues.

While the described installation effects economy by usefully heating air, it is to be noted that the invention, in its broader aspects, embraces possible modifications for water heating purposes.

The invention is presented as including all such modifications and changes as come within the scope of the following claims.

What I claim is:

1. A heat economizer comprising an inlet header and an outlet header for furnace gases, a plurality of heat-dissipating flues connecting said headers and spaced apart to form passages for the upflow of a fluid to be heated by said gases, one of such flues being of relatively large capacity for by-pass purposes, and a damper regulating the flow through the last-mentioned flue, said damper being proportioned to reduce the flow, in its closed position, to substantial equality with the individual flow through the flues of lesser capacity, whereby the by-pass flue is adapted for heat-dissipating use.

2. A heat economizer comprising an inlet header and an outlet header for furnace gases, a plurality of flues connecting such headers and laterally spaced to form passages for the upflow of air to be heated by such gases, and a member disposed beneath the portions of said passages remote from the inlet header materially limiting the upflow of air into all of said portions.

3. A heat economizer comprising an inlet header and an outlet header for furnace gases, a plurality of flues connecting such headers and laterally spaced to form passages for the upflow of air to be heated by such gases, partitions extending approximately vertically in said air passages, remotely from both of said headers, and a member disposed beneath the portions of said passages between said partitions and said outlet header materially limiting the upflow of air into all of the passages.

4. A heat economizer comprising an inlet header and an outlet header for furnace gases, a plurality of flues connecting such headers and laterally spaced to form passages for the upflow of air to be heated by such gases, an air outlet fitting surmounting said flues and communicating with all of said passages throughout substantially their full length, said fitting having an outlet at

its end adjacent said inlet header, and means beneath the portions of said passages remote from said inlet header, for limiting the access of air to such portions and for directing air entering such portions in the approximate direction of flow of the furnace gases.

5. A heat economizer comprising an inlet header and an outlet header for furnace gases, a plurality of flues connecting such headers and laterally spaced to form passages for the upflow of air to be heated by such gases, partitions extending approximately vertically in said air passages, remotely from both of said headers, and means coacting with said partitions to limit the upflow of air into the portions of said air passages between the partitions and said outlet header.

6. A heat economizer comprising an inlet header and an outlet header for furnace gases, a plurality of substantially parallel flues connecting said headers and serving to deliver furnace gases from the inlet header to the outlet header, said flues being spaced to form passages for the flow of air, one of said flues having a relatively large capacity to afford a flow of gases for preheating the outlet header and its outlet passage, and being disposed at one side of the remaining flues, and the outlet header having an outlet in its portion adjacent the other side of the remaining flues, whereby gases entering the outlet header from the preheating flue flow past the remaining flue outlets to the outlet header in discharging to said outlet and induce a flow through the remaining flues.

7. A heat economizer comprising an inlet header and an outlet header for furnace gases, a plurality of heat-dissipating flues connecting said headers and spaced apart to form passages for a flow of air to be heated by said gases, one of such flues being of relatively large capacity for by-pass purposes, a damper regulating the flow through the last-mentioned flue, said damper being proportioned to reduce the flow, in its closed position, to substantial equality with the individual flow through the flues of lesser capacity, whereby the by-pass flue is adapted for heat-dissipating use, and a hood receiving air from all of said air passages and having a sole outlet for such air.

BURL G. CROSS.