D. M. ROSS.

DISPENSING CABINET.

APPLICATION FILED MAR. 19, 1915.

1,160,448.

Patented Nov. 16, 1915.

2 SHEETS—SHEET 1.

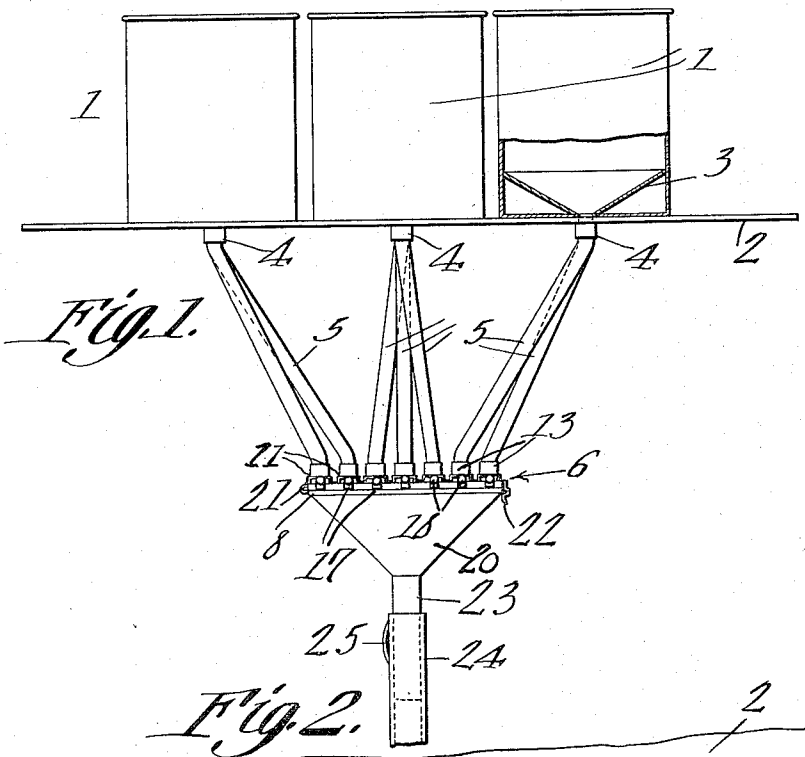

Fig. 1.

Fig. 2.

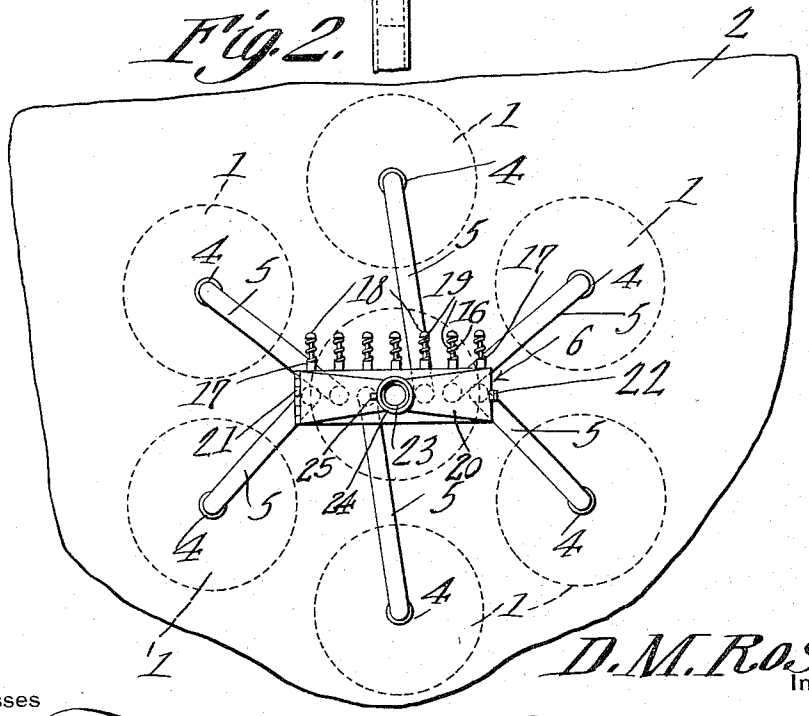

Witnesses

J. P. Lavery

Monroe E. Miller

D. M. ROSS Inventor

by C. A. Snow & Co.

Attorneys

D. M. ROSS.

DISPENSING CABINET.

APPLICATION FILED MAR. 19, 1915.

1,160,448.

Patented Nov. 16, 1915.

2 SHEETS—SHEET 2.

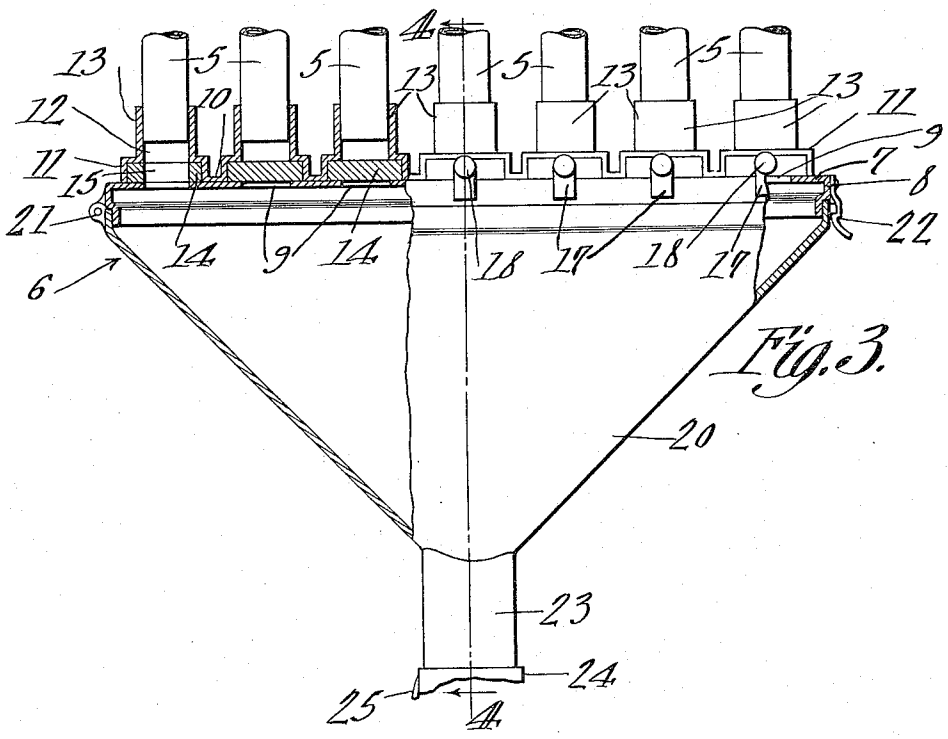

Fig. 3.

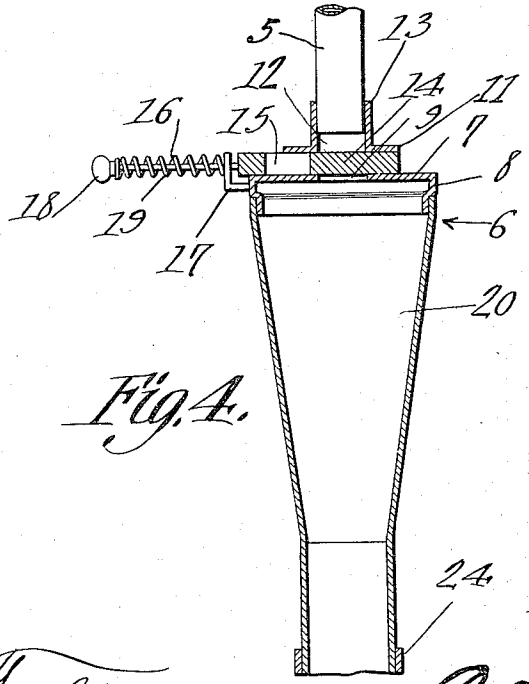

Fig. 4.

D. M. Ross
Inventor

Witnesses

J. R. Tomlin

Monroe E. Miller

by C. A. Snow & Co.
Attorneys

UNITED STATES PATENT OFFICE.

DAVID M. ROSS, OF YOUNGSTOWN, FLORIDA.

DISPENSING-CABINET.

1,160,448. Specification of Letters Patent. Patented Nov. 16, 1915.

Application filed March 19, 1915. Serial No. 15,520.

To all whom it may concern:

Be it known that I, DAVID M. ROSS, a citizen of the United States, residing at Youngstown, in the county of Bay and State of Florida, have invented a new and useful Dispensing-Cabinet, of which the following is a specification.

The present invention appertains to a dispensing cabinet adapted to be employed in grocery stores, and elsewhere, and aims to provide a novel and improved structure whereby a plurality of articles, such as rice, coffee, beans, peas, and the like, can be readily dispensed at a central point.

One of the objects of the invention is the provision of a dispensing apparatus of the nature indicated, embodying novel means for controlling the discharge of the various materials, and for directing the discharged material into a sack disposed upon a counter scale, the present apparatus being so designed as to be supported above a counter scale for conveniently delivering the desired material into the sack which is placed upon the scale platform.

It is also within the scope of the invention to provide an appliance of the character specified which is comparatively simple, non-encumbering, compact and inexpensive in construction, which will eliminate waste, which will save time, and which is sanitary, convenient, practical and efficient in use.

With the foregoing and other objects in view which will appear as the description proceeds, the invention resides in the combination and arrangement of parts and in the details of construction hereinafter described and claimed, it being understood that changes in the precise embodiment of the invention herein disclosed can be made within the scope of what is claimed, without departing from the spirit of the invention.

The invention is illustrated in the accompanying drawings, wherein:—

Figure 1 is a side elevation of the improved dispensing cabinet, a portion of one bin being broken away to disclose the hopper bottom thereof. Fig. 2 is a bottom view of the invention. Fig. 3 is an enlarged front view of the controlling device and discharge hopper, portions being broken away. Fig. 4 is a sectional view on the line 4—4 of Fig. 3.

In carrying out the invention, there is provided a group or cluster of bins 1 mounted upon a suitable platform 2, this platform 2 being supported in any suitable manner above the counter or other dispensing point and if desired, the bins 1 may be mounted upon a floor above the counter, so that the member 2 may be taken to represent either a platform, floor or other support. Each of the bins 1 has a hopper bottom 3 provided with a spout 4 projecting downwardly through the platform 2, and inclined pipes 5 have their upper ends slipped into the spouts 4. The pipes 5 are preferably constructed of glass or other transparent material, whereby the various materials which gravitate into the pipes 5 from the bins will be displayed or exhibited in an effective manner, and which enables the customer as well as the proprietor or clerk to select the desired goods. The lower ends of the pipes 5 are arranged in a line, and are connected to the dispensing device 6. This dispensing device 6 embodies an elongated horizontal plate 7 having a downturned marginal flange or rim 8, and a longitudinal series of apertures or openings 9 between its sides. A longitudinal strip or member 10 is secured upon the plate 7 between the openings 9 and is arched over or offset upwardly above the said openings, the arched or offset portions 11 each being provided with an opening 12 above the respective opening 9, and each of the portions 11 is further provided with an upstanding sleeve 13 surrounding the respective opening 12 and into which the lower end of the respective pipe 5 is slipped. The pipes 5 are thus brought from the various bins 1 to the lower central dispensing device 6.

A valve or cut off 14 is slidable within each arched or offset portion 11 upon the plate 7, and is provided with an opening or aperture 15 adapted to be brought into and out of registration with the respective openings 9 and 12. The valves 14 carry forwardly projecting stems 16 which are slidable through brackets 17 carried by the front portion of the flange or rim 8 of the plate 7 and knobs 18 are secured upon the forward or free ends of the stems 16. Coiled wire expansion springs 19 are disposed upon the stems 16 between the brackets 17 and knobs 18, for yieldably moving the valves 14 forward to closed position.

A common hopper 20 is employed for the various materials, the same being elongated or of the same contour as the plate 7, and its mouth is adapted to slip upwardly over the

edge portion of the flange or rim 8 of the plate 7. One end of the hopper 20 is hinged, as at 21, to one end of the plate 7, and the other or free end of the hopper is normally secured to the other end of the plate 7 by means of a spring catch 22.

The hopper 20 is provided with a depending outlet spout 23, and an extension sleeve or spout section 24 is telescoped onto the spout 23 and is provided with a spring or other device 25 engageable with the spout 23 for holding the extension sleeve 24 at various vertical positions.

In use, the platform 2 supporting the bins 1, is mounted in any suitable manner above the counter in a grocery store, or elsewhere, and the bins 1 may be filled with rice, coffee, beans, peas, and other materials which are to be dispensed. The counter scale (not shown) may be seated upon the counter below the dispensing device 6, and a bag or sack may be readily placed upon the scale platform below the discharge hopper 20. In placing the bag or sack upon the scale platform, the extension sleeve 24 is slid upwardly so that the bag or sack may be readily placed upon the platform of a scale, and in which event the sleeve 24 is slid downwardly so as to enter the bag or sack. Then by pressing the proper knob 18, the respective valve 14 will be slid to open position to bring the opening 15 thereof into register with the respective openings 9 and 12, and this will allow the desired material to flow into the hopper 20 and thence downwardly through the hopper spout 23 into the bag or sack. The flow of material is controlled by manipulating the valve 14, and the flow may be cut off properly, in order that when the desired quantity of material is discharged into the bag or sack, the flow may be entirely cut off. The bag or sack being placed upon the scale, will serve to indicate upon the scale, the amount of material within the bag, and when the desired amount of material has been discharged into the bag or sack, the corresponding valve may be closed by simply releasing the knob 19 thereof so that the valve will be closed under the influence of its spring 19. Then, by moving the sleeve 24 upward, the bag or sack may be readily removed from the scale, for the purpose of tying the same. The vertically movable sleeve 24 enables various sizes of bags to be accommodated, and when large objects are to be weighed upon the scale, the hopper 20 may be swung to one side, by detaching the free end thereof from the spring catch or latch 22, and then swinging the hopper upon the hinge 21 to the respective side of the pipes 5. This will remove the hopper 20 to one side and upwardly out of the way when desired, and furthermore, the hopper may be swung open to enable access to be had to the valves 14 and pipes 5 from below, especially when it is desired to clean out the openings 9, 15, and 12, and the pipes 5.

Although the present apparatus is particularly useful in grocery stores for dispensing various materials at a central point, the device may be employed in other capacities, which will be obvious without further comment.

Having thus described the invention, what is claimed as new is:—

1. In an apparatus of the character described, a plurality of bins, pipes connected to the bins and extending downwardly therefrom to deliver the material from the bins, and a dispensing device including a member having a longitudinal series of offset portions to which the lower ends of said pipes are connected, a hopper hinged to said member to be swung under the same and to one side thereof, and valves carried by said member for controlling the discharge of materials from said pipes into the hopper.

2. A dispensing device including a member having a longitudinal series of openings, a strip on said member having a longitudinal series of offset portions provided with means for the attachment of pipes thereto, valves slidable in said portions upon said member and having openings adapted to be brought into and out of registration with said openings, and a hopper carried by said member.

In testimony that I claim the foregoing as my own, I have hereto affixed my signature in the presence of two witnesses.

DAVID M. ROSS.

Witnesses:
A. W. Logue,
M. L. Parker.

Copies of this patent may be obtained for five cents each, by addressing the "Commissioner of Patents Washington, D. C."