Feb. 11, 1941. L. J. ANDRES 2,231,517

MULTIPLE PHONOGRAPH COUPLING APPARATUS

Filed June 15, 1939 2 Sheets-Sheet 1

Fig. 1.

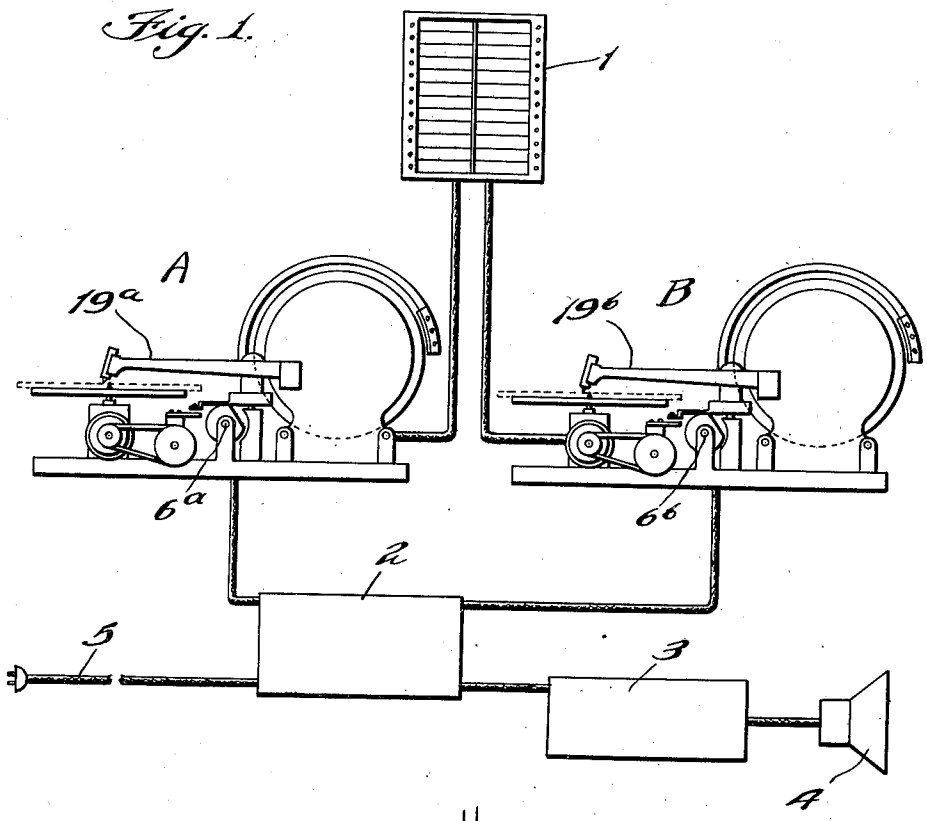

Fig. 2.

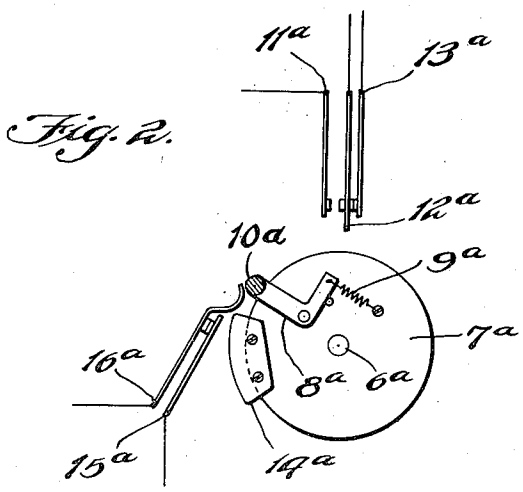

INVENTOR.

Lloyd J. Andres

Feb. 11, 1941. L. J. ANDRES 2,231,517

MULTIPLE PHONOGRAPH COUPLING APPARATUS

Filed June 15, 1939 2 Sheets-Sheet 2

Fig. 3.

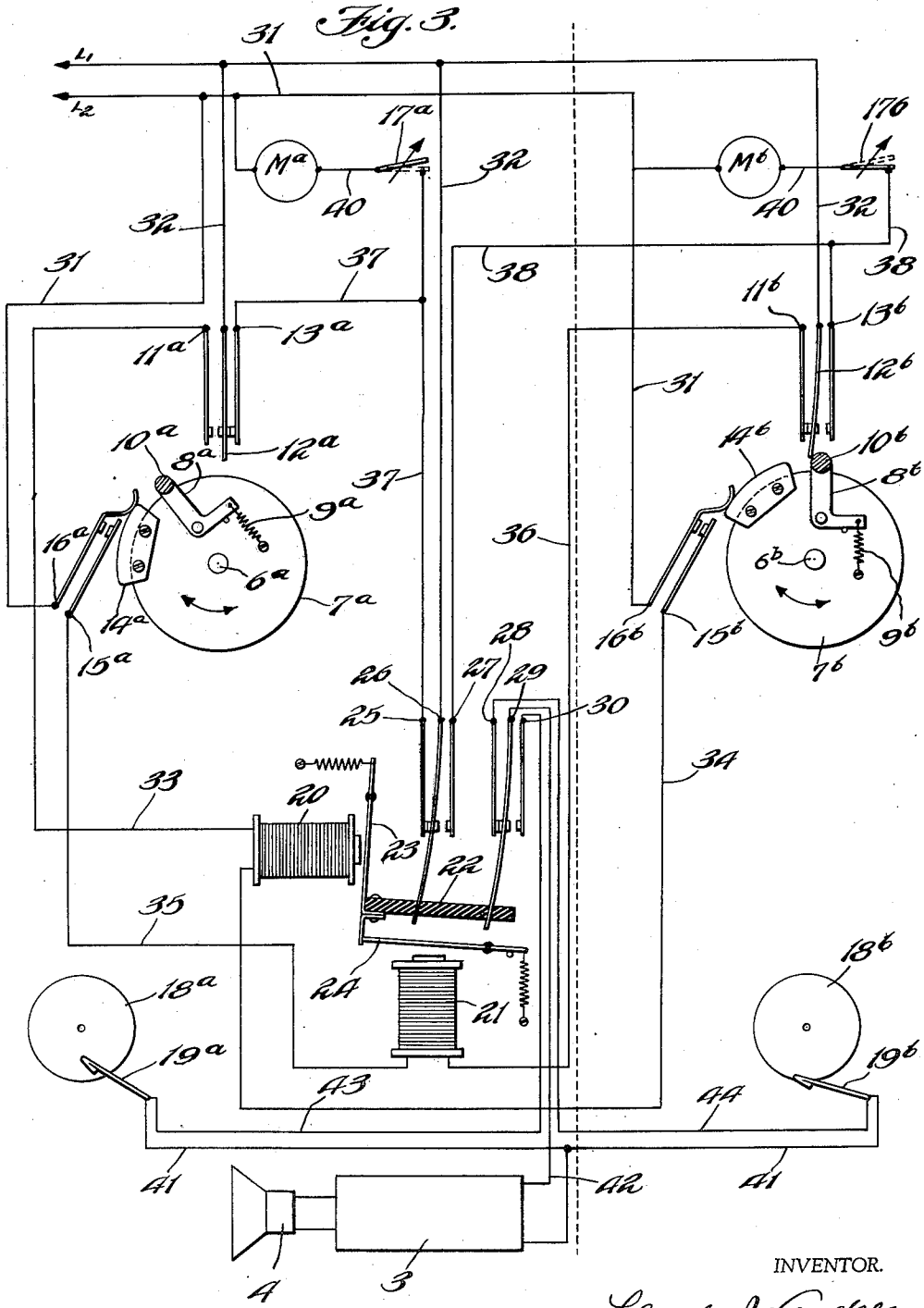

INVENTOR.

Lloyd J. Andres

Patented Feb. 11, 1941 2,231,517

UNITED STATES PATENT OFFICE

2,231,517

MULTIPLE PHONOGRAPH COUPLING APPARATUS

Lloyd J. Andres, Chicago, Ill., assignor to Automatic Instrument Company, Grand Rapids, Mich., a corporation of Michigan

Application June 15, 1939, Serial No. 279,309

4 Claims. (Cl. 274—10)

This invention relates in general to automatic phonographs and more particularly to apparatus enabling two automatic selective record changers to be electrically coupled to operate and play alternately without interference.

Heretofore, the operation of an automatic phonograph was limited to playing the number of records available in its own record changer and a considerable time delay occurred between the playing of different records because of the time consumed while the played record was being restored and a subsequently selected record placed upon the turntable in playing position.

The present invention overcomes the above objections in providing mechanism for inter-connecting two similar record changers and a control panel common to both.

A principal object of the invention is the provision of electrical means for inter-connecting two similar selective record changers, either under the control of separate or combined control stations, adapted to alternately play selected records from either or both machines without interference.

A further object provides means for the completion of the record changing cycle, namely, the automatic removal of a selected record from a magazine and its subsequent transfer to the turntable for playing, in the second of a pair of inter-connected record changers while the first record changer of the pair is playing a previously selected record, thus providing means for a rapid repetition of play between the two inter-connected record changers and eliminating the time delay normally consumed during the record changing cycle of each record changer.

A further object is the provision of apparatus whereby a plurality of selections may be made substantially at the same time on both of two record changers, including means for controlling the alternate playing of the selected group of records in both record changers.

Fig. 1 of the drawings is a diagrammatic showing of two record changers and a push button control panel common to both, including an amplifier and loud speaker.

Fig. 2 shows the automatic switching means attached to each record changer.

Fig. 3 is a diagrammatic showing of the mechanical components of the apparatus including a schematic wiring diagram connected thereto.

Referring to Fig. 1, two conventional record changers A and B are shown with a push button control station 1 connected thereto. Junction box 2 is provided as a housing for miscellaneous wiring and the locking change-over relay to be hereinafter described. The output of an audio frequency amplifier 3 is connected to loud speaker 4. The record changer and amplifier are supplied with electric power through cable 5. A motor driven shaft 6a and 6b in each record changer is caused to rotate approximately one revolution in one direction while removing a selected record from the magazine and placing it upon the turntable for playing, and following the playing, the shafts 6a and 6b are caused to return approximately one revolution in the opposite direction to transfer the record from the turntable and return it to its original position in the magazine. To each of these shafts is connected a control wheel for operating control switches to be hereinafter described. Similar suitable mechanical movements are available for this use in most types of automatic record changers.

Fig. 2 shows an enlarged view of one of the shafts 6a to which has been attached wheel 7a. A crank 8a is pivotally mounted on wheel 7a and urged into the position shown in Fig. 2 by spring 9a. An insulated projection 10a is affixed to the end of crank arm 8a and arranged in the path of switch spring 12a of the switch 11a—12a—13a, which is affixed to the record changer. The switch springs 12a and 13a are normally closed while springs 12a and 11a are normally open. Attached to the wheel 7a is non-conducting cam 14a which is arranged in the path of spring 16a of the normally closed switch 15a—16a, also affixed to the record changer.

The position of the elements shown in Fig. 2 corresponds with the rest or inoperative position of the record changer.

Referring to Fig. 3, the apparatus lying to the left of the dotted line includes the record changer A and the distribution unit 2 shown in Fig. 1. The apparatus lying to the right of the dotted line includes the record changer B, these record changers being well known in the art, a typical example of which is the patent to Green, No. 2,104,032, granted January 4, 1938, and the patent to Wilcox, No. 2,002,236, granted May 21, 1945. Wheels 7a and 7b are attached to shafts 6a and 6b of the record changers respectively. The normally closed switches 15a—16a and 15b—16b are mounted adjacent to each wheel in the path of the cams 14a and 14b. However, the plane of this cam is fixed so that the levers 8a—8b and the insulated studs 10a and 10b do not interfere with the action of the switches 15a—16a and 15b—16b when the wheels

are rotated. Ma and Mb represent the electric motors for driving the record changers. The individual record changer starting and stopping switches 17a and 17b are attached to each record changer. These switches are mechanically operated by the automatic action of each record changer to be hereinafter described.

Although the switches 17a and 17b are used to illustrate a well known means for stopping the rotation of the wheels 7a and 7b, in some particular types of automatic record changers where a single motor is used for driving the entire record changer, a mechanical clutch is utilized to stop the record transfer mechanism when the record is properly positioned on the turntable. It is apparent in a machine of this character that a mechanical clutch would serve the same purpose as the switches 17a and 17b in arresting the rotation of the wheels 7a and 7b.

The turntables 18a and 18b are driven by separate motors, in the record changers A and B respectively, (shown in Fig. 2), and the reproducers 19a and 19b, which are parts of each record changer, are connected through switching means, to be hereinafter described, to amplifier 3. The output of the amplifier is connected to loud speaker 4.

Referring to Fig. 3, a locking change-over relay with coils 20 and 21 is provided to operate a pair of single pole double throw change-over switches 25—26—27 and 28—29—30. The armature 23 is pivoted at 45 and its active end normally urged by a suitable spring away from the coil 20. Insulator 22, which is integral with armature 23, is provided with slots to retain the center blades 26 and 29 of the change-over switches. Armature 24 of coil 21 is pivoted at 46 and normally urged away from coil 21 by the action of a suitable spring, as shown. Armature 23, as shown in the figure, is in the position it will assume following a momentary attractive effort of coil 20. It will be noted that the armature is held in its attracted position by the end of armature 24 engaging behind the end of armature 23, thus the switch blades 25—26 and 28—29 are held in their closed circuit positions, the blades 27 and 30 remaining in their open circuit positions. It is apparent when the armatures are in the positions shown and the coil 21 is momentarily energized, the armature 24 will be attracted and disengage from the end of armature 23, permitting the change-over switch blades 26—29 to move to their opposite positions, under the influence of the spring attached to the end of armature 23, thus opening the circuit between switch blades 25—26 and 28—29 and closing the circuit between blades 26—27 and 29—30 respectively.

One side of the power line L2 is connected to one side of each motor Ma and Mb in the record changer mechanism and to the springs 16a and 16b of switches 15a—16a and 15b—16b by conductors 31. The opposite side of the power line L1 is connected to the central springs 12a and 12b of switches 11a—12a—13a and 11b—12b—13b and to the central blade 26 of the change-over switch 25—26—27 by conductors 32.

Switch spring 11a is connected to one side of coil 20 by conductor 33. The remaining terminal of coil 20 is connected to switch spring 15b by conductor 34. Switch spring 15a is connected to one terminal of coil 21 by conductor 35. The remaining terminal of coil 21 is connected to switch spring 11b by conductor 36. The switch spring 13a is connected to one side of switch 17a and change-over switch blade 25 by conductors 37. The change-over switch blade 27 is connected to switch spring 13b and one side of switch 17b by conductors 38. The remaining terminals of the electric motors Ma and Mb are connected to switches 17a and 17b respectively by conductors 40. One side of the reproducers 19a and 19b are common and connected to the amplifier input through conductor 41.

The remaining input terminal of the amplifier 3 is connected to the central blade of the "pick-up" change-over switch 29 by conductor 42. The remaining leads from the reproducers 19a and 19b are connected to blades 28 and 30 of the pick-up change-over switch by conductors 43 and 44 respectively.

When the record changers A and B are both at their rest positions the wheels 7a and 7b, shown in Fig. 3, will both assume positions as shown in Fig. 2.

Assuming that a single selection has been made on the left-hand record changer A by the operation of a selected button on the control panel, Fig 1, the switch 17a, Fig. 3, will automatically close, (through the action of apparatus not shown), and the wheel 7a will begin rotation in a counter-clockwise direction and will continue its rotation until the record is placed upon the turntable and the reproducer begins the play of the record. At this point the switch 17a will be automatically opened and simultaneously the wheel 7a will be stopped in the position shown in Fig. 3.

During this counter-clockwise rotation of the wheel 7a, the projection 10a will strike switch spring 12a and momentarily break its contact with 13a and make contact with 11a. The switch 11a—12a will complete a circuit through coil 21 through the closed switch 15b—16b to trip the change-over relay into position shown in Fig. 3. As the wheel continues its rotation the switch 11a—12a—13a will restore to its normal position as shown in Fig. 3. Previous to this action the non-conducting cam 14a will open the switch 15a—16a.

Since the position of the locking relay was established by previous operation, as shown in Fig. 3, the change-over switch springs 25 and 26 were closed, hence, the switch 12a—13a, which is in series with the motor Ma, is short-circuited and the motor Ma continues its normal uninterrupted operation and the playing of a record in record changer A, Fig. 1 The switch 15a—16a is connected in series with the coil 21 and since it remains open during the playing of a record in record changer A, the coil 21 is inoperative, which assures the proper normal operation of record changer A. While record changer A is playing a selected record and during this time a second selection is made on the control panel corresponding to a record in record changer B, the switch 17b will automatically close and the motor Mb will start the transfer of a record in record changer B and simultaneously start the rotation of the wheel 7b. Since switch 12b—13b is in series with the motor Mb and the change-over switch blades 26 and 27 are open, the motor will stop and the wheel 7b assume a position shown in Fig. 3, as a result of the projection 10b striking switch spring 12b and moving it out of contact with spring 13b, thus opening the circuit to motor Mb. Simultaneously spring 13b is moved into contact with spring 11b which will

partially complete a series circuit to coil 21. It is also to be observed that the switch 15b—16b is now in its open position which interrupts the circuit through coil 20 to the switch 11a—12a. The record changer B has now stopped with a selected record placed on the turntable and the reproducer held in an arrested position in close proximity with the starting grooves of the record.

When the record in record changer A has completed its play, switch 17a will automatically close (through the action of apparatus in the record changer not shown), and start the return transfer of the record. At the same instant the wheel 7a will begin its return clockwise rotation, and as soon as cam 14a has traveled sufficiently far to permit the switch 15a—16a to close, it is apparent that a circuit will be completed through magnet 21 and switch 11b—12b, and tripping the locking relay into a position opposite of that shown in the drawings. This action will close the change-over switch blades 26—27 and short-circuit the open switch 12b—13b and cause the motor Mb to continue its transfer cycle. In so doing, the reproducer will engage the starting grooves of the record and the playing of the B record changer will have started. The position of the change-over relay for the completion of the play of record changer B is assured because the switch 15b—16b will interrupt a circuit through coil 20 and prevent any further operation of the change-over switch until the completion of the playing of the record.

It is apparent that if a selection is made on the record changer B and subsequently a selection is made on record changer A, the B record changer will function first and the action of the A machine will be arrested until the B machine has completed its play in the same manner as described above.

It is also obvious that a sequence of selected records can be played on one record changer only without interference or delay from the other.

Having described my invention, I claim:

1. An electric coupling apparatus for two automatic selective record changers each having means for performing a record changing cycle and a record playing cycle comprising a source of electric energy, electric switching means attached to and operated by each record changer, a magnetic relay controllable by both the aforesaid switching means, an electric circuit network from the said relay to both said switching means and said source of electric energy, said switching means adapted to cause the said record changers to operate alternately when both are initiated, each electric switching means having means for automatically initiating the operation of one of said record changers from its record changing cycle to its record playing cycle and substantially simultaneously initiating the operation of said other record changer from its record playing cycle to its record changing cycle.

2. An electric coupling apparatus for two automatic selective record changers each having means for performing a record changing cycle and a record playing cycle comprising a source of electric energy, electric switching means attached to and operated by each record changer, a magnetic relay controllable by both the aforesaid switching means, an electric circuit network from the said relay to both said switching means and said source of electric energy, said switching means adapted to cause the said record changers to operate alternately when both are initiated, each electric switching means having means determined by the positions of said first named switch means and the position of said relay for arresting the operation of one of said record changers following its record changing cycle.

3. An electric coupling apparatus for a plurality automatic selective record changers each having means for performing a record changing cycle and a record playing cycle, comprising a source of electric energy, electric switching means attached to and operated by each record changer, a magnetic relay means controllable by each of the aforesaid switching means, an electric circuit network from the said relay means to each of said switching means, said switching means adapted to cause the said record changers to operate sequentially when a plurality of record changers are initiated, each electric switching means having means for automatically initiating the operation of one of said record changers from its record changing cycle to its record playing cycle and substantially simultaneously initiating the operation of any other record changer from its record playing cycle to its record changing cycle.

4. In a coupling apparatus for a plurality of record changers an electric switching means driven by each said record changer, each of said means comprising a movable member driven by each said record changer and arranged to move in two directions for every complete operation of each said record changer, a yieldable abutment affixed to said movable member yieldable only in one direction, a second abutment integral with said movable member, an electric switch positioned in the path of said yieldable abutment, a second electric switch positioned in the path of the said second abutment, the said second electric switch adapted to operate when said movable member is moved in either direction, the first mentioned electric switch adapted to operate only upon uni-directional movement of said movable member.

LLOYD J. ANDRES.