June 4, 1935. C. H. STUART 2,003,562

FLUID DISPENSING DEVICE

Filed Jan. 7, 1933

Fig. 2

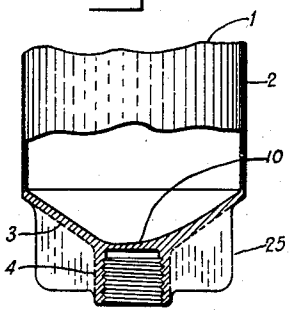

Fig. 1

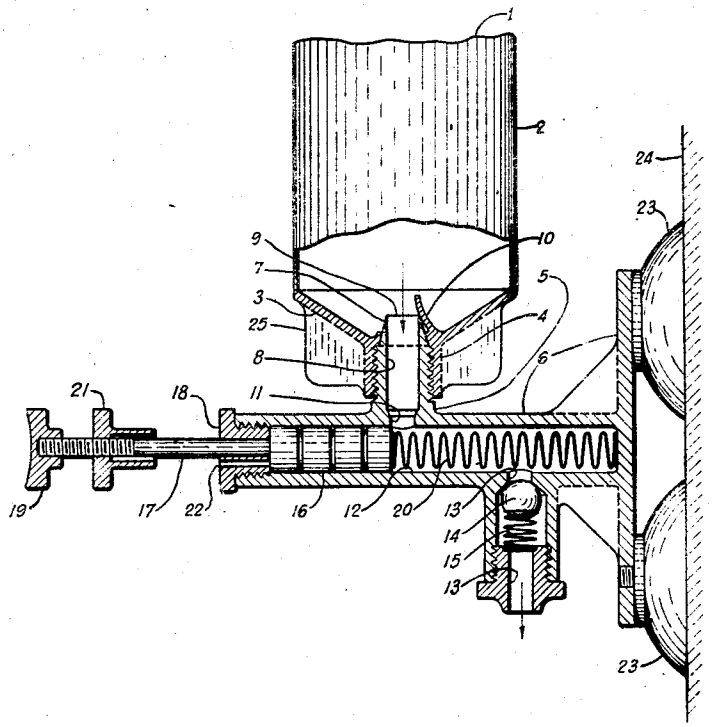

Charles H. Stuart INVENTOR.

BY

Kenneth E. Stuart ATTORNEY.

UNITED STATES PATENT OFFICE

2,003,562

FLUID DISPENSING DEVICE

Charles H. Stuart, Newark, N. Y.

Application January 7, 1933, Serial No. 650,651

17 Claims. (Cl. 221—103)

My invention relates to means for dispensing fluids and more particularly fluids of a consistency to flow under a moderate pressure, such as are commonly sold in collapsible tube containers, including adhesives, food flavors, toilet preparations, etc.

One object of my invention is the provision of a convenient fixed support for such containers.

Another object of my invention is the provision of means by which a pre-determined and regulable quantity of the contents may be withdrawn by merely pressing a plunger in to the limit of its travel.

Still another object of my invention is the provision of a novel closure such that the container is opened for use by the act of screwing it upon the aforementioned fixed support.

My invention is typically applicable to the dispensing of soap and especially shaving soap in Pullman cars and barber shops.

I am aware that it has been proposed to screw such containers upon a fixed support and expel the contents by means of pressure applied externally between rollers. My invention, on the contrary, employs suction for this purpose, thus greatly simplifying the mechanism and rendering more positive the control of the quantity withdrawn.

Referring to the drawing:

Fig. 1 is an elevational view, partly in section, showing the discharge end of a collapsible container mounted in inverted position upon a fixed support constructed in accordance with my invention, and

Fig. 2 is an elevation, partly in section, of the discharge end of the container showing the closure means before it has been opened by screwing the container upon the fixed support.

Referring to the drawing:

1 is a container of the usual tin and lead composition with a thin, flexible, collapsible wall 2, a thickened end portion 3 and a throat 4. The throat 4 is internally threaded to screw over the nipple 5 of the fixed support 6. The nipple 5 has a conical extension 7 and tubular passage 8, forming with the conical extension the cutting edge 9. The throat 4 is normally closed by the diaphragm 10 (Fig. 2). In screwing the container upon the nipple 5 the cutting edge 9 is brought into contact with the diaphragm 10. The diaphragm 10 is made slightly thicker at one side than at the other, as illustrated in Fig. 2, so that when it is completely sheared through at the thin side it remains attached at the opposite side. Further advance of the conical extension 7 presses the sheared portion of the diaphragm back as illustrated in Fig. 1, without completely detaching it. Thus the sheared diaphragm is prevented from subsequently working its way into a position to cover and close the passage 8. The conical extension 7, moreover, expands the opening made by the cutting edge 9 and completely closes and seals this opening, so that the contents of the container are prevented from leaking out around the thread of the nipple 5.

Referring again to Fig. 1, it will be seen that the passage 8 communicates through the port 11 with the cylindrical barrel 12, which is also provided with a discharge passage 13, normally closed by a check valve consisting of the ball 14, held against its seat by the spring 15. 16 is a piston moving in the barrel 12 and actuated by the stem 17 which passes through the bushing 18 and is provided with the button 19 adapted to be pressed by a thumb or finger. The piston 16 at the outer limit of its travel uncovers the port 11 and conversely when pressed inward, after a short travel, it closes this port. The piston is normally pressed outward by the spring 20. 21 is an adjustable stop screwing onto the stem 17 and acting to limit its inward travel. 22 is a vent in the bushing 18 to permit air to flow in and out under the displacement of the piston 16. The operation of the device is as follows:

The button 19 having been pressed inward, as far as permitted by the stop 21, the air is expelled from the barrel 12 through the passage 13. Upon relieving the pressure of the finger from the button 19, the spring 20 forces piston, stem and button outward, creating a vacuum in the barrel 12. When the port 11 is uncovered the fluid from the container flows in to satisfy the vacuum. Upon the next stroke of the piston, fluid is discharged through the passage 13. After a few strokes the barrel 12, including the space beyond the travel of the piston, becomes filled with the fluid contents of the container and thereafter the quantity of fluid discharged corresponds accurately to the displacement of the piston. By screwing the stop 21 forward or backward the quantity of fluid discharged per stroke of the piston may be regulated. As the container is evacuated it progressively collapses.

Rubber suction cups 23 may be provided for convenience in affixing the support 6 to the wall 24 or any smooth surface. In Fig. 1 three such cups are assumed, two on the upper or tension side of the support and one on the lower or compression side. Obviously the rubber suction cups may be dispensed with and the support screwed directly to the wall or other surface or the device may be otherwise immobilized, as by its own weight. I do not wish to be limited, therefore, to the type of support illustrated, my invention comprising elements that are not dependent upon any particular type of support or fixture.

The collapsible container 1 may be provided with the fins or wings 25 to facilitate screwing it onto the nipple 5 with the unaided fingers.

Obviously, a check valve could be provided in

the nipple 5, but by causing the piston 16 to cover the port 11 this is rendered unnecessary and the mechanism is to that extent simplified.

What I claim is:

1. A fluid dispensing device comprising a collapsible container, a fixed support for the same and means for evacuating said container comprising a barrel communicating through a port with the interior of said container, a piston moving in said barrel to close said port, a spring in said barrel normally forcing said piston outward to the limit of its travel to uncover and open said port, a bushing in the end of said barrel limiting the travel of said piston, a stem passing through and guided by said bushing to operate said piston, a vent in said bushing and a discharge port from said barrel normally closed by a check valve.

2. A fluid dispensing device comprising a collapsible container and a fixed support for the same, said container being formed with a discharge neck and projections integral with its discharge neck to afford a grip for screwing the same in position upon said fixed support.

3. A fluid dispensing device comprising a collapsible container and a support for the same, said container being formed with a discharge neck and wing projections integral with its discharge neck to afford a grip for the fingers for screwing the same in position upon said support.

4. A fluid dispensing device comprising a container provided with a discharge neck, a fixed support for said container, engaging means upon said fixed support adapted to engage the discharge neck of said container, a closure for said container adapted to be opened by the act of engaging said container in position upon said engaging means, and means associated with said fixed support for evacuating said container through said engaging means.

5. A fluid dispensing device as defined in claim 4 in which said container is closed by a diaphragm adapted to be sheared open by the act of engaging said container in position upon said engaging means.

6. A fluid dispensing device as defined in claim 4 in which the throat of said container is closed by a diaphragm and provided outside said diaphragm with a female thread adapted to screw over a male thread upon a nipple forming part of said engaging means, the end of said nipple being provided with a cutting edge adapted to shear open said diaphragm.

7. A fluid dispensing device as defined in claim 4 in which said container is closed by a diaphragm adapted to be sheared part way around, leaving it attached at one side, by the act of engaging said container in position upon said engaging means.

8. A fluid dispensing device as defined in claim 4 in which said container is closed by a diaphragm thicker at one side than at the other, whereby said engaging means shears through one side of said diaphragm, leaving the other side attached.

9. A fluid dispensing device as defined in claim 4 in which the end of said engaging means is conical, whereby after shearing through said diaphragm said conical end tightly closes the aperture in said diaphragm.

10. A fluid dispensing device comprising a collapsible container and means for evacuating the same comprising a barrel communicating through a port with the interior of said container, a piston moving in said barrel to close said port, a spring in said barrel normally forcing said piston outward to the limit of its travel to cover said port, a bushing in the end of said barrel limiting the travel of said piston, a stem passing through said bushing to operate said piston, a vent in said bushing and a discharge port from said barrel normally closed by a check valve.

11. A fluid dispensing device comprising a collapsible container and means for evacuating the same, said container being formed with a discharge neck and projections integral with its discharge neck to afford a grip for screwing the same in position upon said evacuating means.

12. A fluid dispensing device comprising a container formed with a discharge neck, means for evacuating said container through said discharge neck, engaging means upon said discharge neck, cooperating engaging means upon said evacuating means and a closure for said discharge neck adapted to be opened by the act of engaging said discharge neck with said evacuating means.

13. A fluid dispensing device comprising a container formed with a discharge neck, means for evacuating said container through said discharge neck, engaging means upon said discharge neck, cooperating engaging means upon said evacuating means, said discharge neck normally closed by a diaphragm adapted to be sheared open by the act of engaging said container with said evacuating means.

14. A fluid dispensing device comprising a container formed with a discharge neck, means for evacuating said container through said discharge neck, a female thread within said discharge neck adapted to screw over a male thread upon a nipple forming part of said evacuating means, said discharge neck normally closed by a diaphragm adapted to be sheared open by a cutting edge upon said nipple.

15. A fluid dispensing device comprising a container formed with a discharge neck, means for evacuating said container through said discharge neck, engaging means upon said discharge neck, cooperating engaging means upon said evacuating means, said discharge neck normally closed by a diaphragm adapted to be sheared part way around, leaving it attached at one side, by the act of engaging said container with said evacuating means.

16. A fluid dispensing device comprising a container formed with a discharge neck, means for evacuating said container through said discharge neck, engaging means upon said discharge neck, cooperating engaging means upon said evacuating means, said discharge neck normally closed by a diaphragm thicker at one side than at the other side, said diaphragm adapted to be sheared through its thinner side leaving it attached at its thicker side, by the act of engaging said container with said engaging means.

17. A fluid dispensing device comprising a container formed with a discharge neck, means for evacuating said container through said discharge neck, engaging means upon said discharge neck cooperating with a nipple upon said evacuating means, a diaphragm normally closing said discharge neck, said nipple provided with a conical tip terminating in a cutting edge, said diaphragm adapted to be sheared open by said cutting edge when said container is engaged with said evacuating means, said conical tip entering and closing the aperture formed in said diaphragm by said cutting edge.

CHARLES H. STUART.