July 20, 1948. R. J. BARTHOLOMEW 2,445,721

TWISTING MACHINE

Filed July 29, 1947 2 Sheets-Sheet 1

FIG. 1

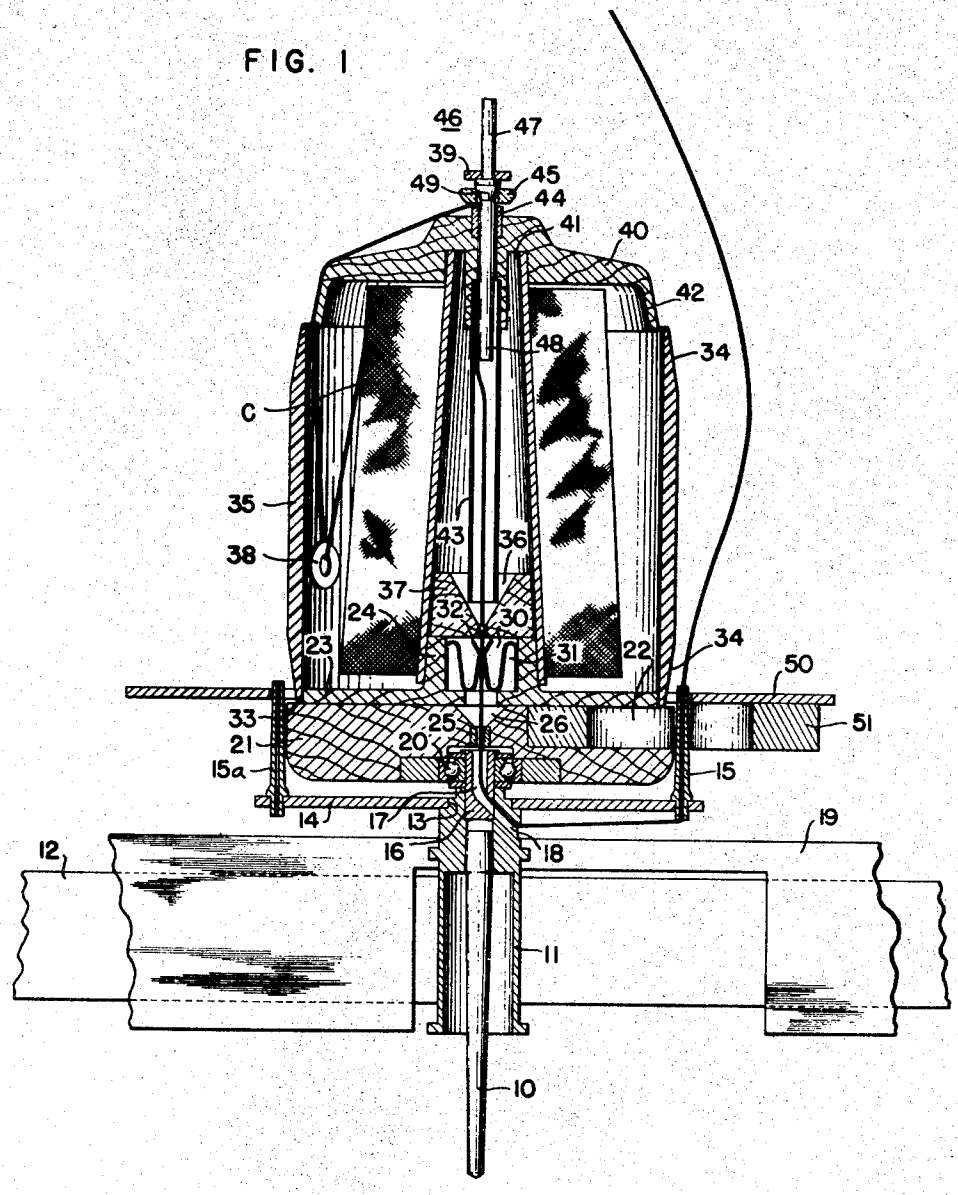

INVENTOR.
ROBERT J. BARTHOLOMEW
BY
J. T. Wolcomb 3rd
ATTORNEY.

July 20, 1948. R. J. BARTHOLOMEW 2,445,721

TWISTING MACHINE

Filed July 29, 1947 2 Sheets-Sheet 2

FIG. 2

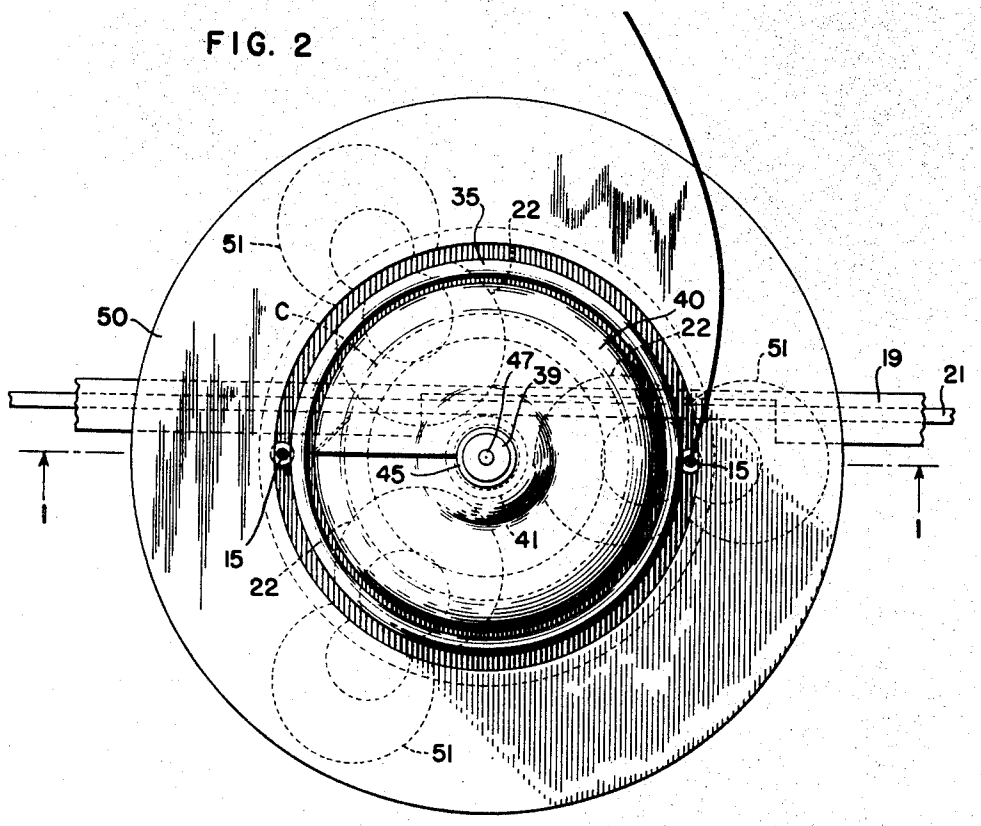

FIG. 3

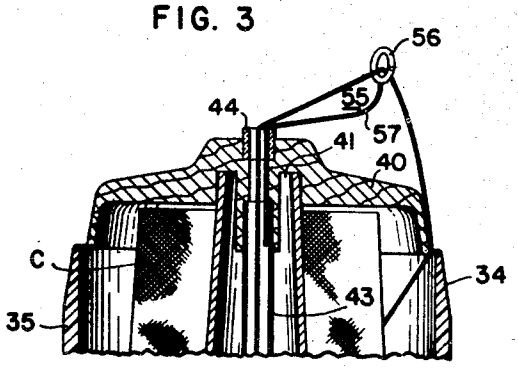

INVENTOR.
ROBERT J. BARTHOLOMEW
BY
ATTORNEY.

Patented July 20, 1948

2,445,721

UNITED STATES PATENT OFFICE

2,445,721

TWISTING MACHINE

Robert J. Bartholomew, Philadelphia, Pa., assignor to Fletcher Works Incorporated, Philadelphia, Pa., a corporation of Pennsylvania

Application July 29, 1947, Serial No. 764,329

9 Claims. (Cl. 57—58)

1

This invention relates to twisting machines, and more particularly to such machines of the type which are adapted to put two turns of twist into a yarn, whether in the form of a roving, thread, or other strand, for each revolution of the spindle.

Various machines have heretofore been proposed for this purpose, but none of these have proven wholly satisfactory. This has been due, in part, to the failure to provide a machine capable of operating continuously at high speed. Some of the difficulties have also arisen because of the failure to make proper provision for tensioning the yarn during the twisting.

It is the principal object of the present invention to provide a twisting machine which will be simple in construction, sturdy and reliable, and capable of continuous operation at high rates of speed.

It is a further object of the present invention to provide a twisting machine which is capable of use with a wide variety of sizes and types of yarn packages from which the yarn to be twisted is delivered.

It is a further object of the present invention to provide a twisting machine having improved provisions for maintaining the yarn package in stationary position as the yarn is taken therefrom.

It is a further object of the present invention to provide a twisting machine having improved provisions for guiding the yarn during the twisting operation.

It is a further object of the present invention to provide a twisting machine having improved control of the tension of the yarn and in which a predetermined fixed tension may be applied together with a variable tension adjustable from the exterior.

It is a further object of the present invention to provide a twisting machine which may be easily threaded when required.

Other objects and advantageous features of the invention will be apparent from the specification and claims.

The nature and characteristic features of the invention will be more readily understood from the following description, taken in connection with the accompanying drawings forming part hereof, in which:

Figure 1 is a vertical central sectional view showing a twisting machine in accordance with the present invention;

Fig. 2 is a top or plan view thereof; and

Fig. 3 is a fragmentary vertical sectional view

2

illustrating a follower which may be employed with the machine.

It should, of course, be understood that the description and drawings herein are illustrative merely, and that various modifications and changes may be made in the structure disclosed without departing from the spirit of the invention.

Referring more particularly to the drawings, it will be seen that the twisting machine therein illustrated includes a vertical spindle 10 supported in any desired and usual manner (not shown) and having secured on the exterior of the tapered upper end thereof a whirl or driving pulley 11 which is adapted for driving engagement by a belt 12 in the customary manner. The upper portion of the pulley 11 is provided with a shoulder 13, of reduced diameter, to which a fly disk 14 of light weight sheet material is secured. The fly disk 14 is of non-magnetic material, such as aluminum.

The fly disk 14 preferably has a yarn guide tube 15 secured thereon, the guide tube 15 being made of light non-magnetic material, such as aluminum or stainless steel. Diametrically opposed with respect to the tube 15 on the fly disk 14, a balancing weight is provided which may consist of another tube 15a of the same character as the tube 15.

At the upper end of the whirl or pulley 11 a bushing 16 is inserted and held in fixed position therein. The bushing 16 is provided with a central downwardly extending opening 17 from which an inclined downwardly extending passageway 18 is provided through the bushing 16 and upper part of the driving pulley 11. The passageway 18 terminates below the fly disk 14 and above the portion of the pulley 11, with which the belt 12 engages.

The frame (not shown) of the machine preferably is provided with a belt guard 19 for preventing any drag on the yarn by air currents from the belt 12.

The bushing 16 has mounted thereon the hub of a ball bearing 20, the outer ring or raceway of the bearing being mounted within a yarn package supporting base 21. The bearing 20 permits of relative rotary movement of the spindle 10 and driving pulley 11 with respect to the base 21. The yarn package supporting base 21 is preferably of flat, substantially cylindrical shape, and is made of non-magnetic material, such as wood or synthetic plastic material. The base 21 has inserted therein a plurality of circumferentially disposed magnets 22 of high intensity magnetic

material, three magnets equally spaced preferably being employed for purposes to be explained.

On the upper face of the base 21, a yarn package mounting plate 23 is provided having an upwardly extending projection 24, the exterior surface of which is of suitable shape for the reception of the yarn package C. Within the interior of the base 21, a yarn guide 25 is provided, preferably of porcelain or other suitable hard and wear-resistant material, for guiding the yarn. The guide 25 is preferably located immediately above the upper end of the opening 17 and at the lower end of a funnel shaped opening 26 formed in the base 21.

The yarn package mounting plate 23 is preferably provided with a central opening 30 within which a tensioning device 31 may be mounted for use with certain types of yarn, the tensioning device illustrated consisting of flat spring material, shaped to provide converging and diverging tensioning arms 32 between which the yarn passes and capable of adjustment to apply the desired tension to the yarn.

The yarn package mounting plate 23 is preferably of smaller diameter than the base 21 to provide a ledge 33 on the base 21 for the reception of a hollow shielding cylinder 35 of non-magnetic material. The cylinder 35 is preferably transparent and for this purpose may be made of a suitable synthetic plastic such as an acrylic resin, but may also be made of aluminum or non-transparent synthetic plastic material. The shielding cylinder 35 is preferably chamfered at the upper and lower end portions thereof, as at 34, to facilitate the passage of the yarn thereover, and particularly as it leaves the guide tube 15. The provision of the chamfered end portions 34 at both ends obviates the necessity for distinguishing between the ends of the cylinder 35 when it is mounted on the base 21.

A guide block 37, preferably also of suitable non-magnetic material, is mounted above the projection 24 and has a funnel-shaped interior opening 36 for purposes to be explained.

The upper end of the tube of the yarn package C or other interposed element serves as a support for a cap 40, a groove 41 being provided in the interior of the cap 40 for engagement with the upper end of the yarn package C. The cap 40 preferably has a downwardly extending skirt portion 42, the lower terminal end of which preferably extends below the upper terminal end of the cylinder 35 and is spaced inwardly therefrom for guiding and retaining the yarn. The exterior surface of the cap 40 is preferably finished so as not to obstruct or abrade the yarn during the twisting.

Mounting in the interior of the cap 40, a guide tube 43 is provided which is adapted to extend downwardly within the interior of the yarn package C and within the opening 36 in the guide block 37. At the upper end of the cap 40 and projecting thereabove, a tubular yarn guide 44 is provided, also preferably of porcelain or other suitable hard and wear-resistant material, and a tensioning ring 45, preferably of like material, is disposed thereabove. The ring 45 is held in position by a tensioning rod 46 which has an upwardly extending portion 47, and a downwardly extending portion 48, with a frusto-conical enlargement 49 therebetween. The enlargement 49 is adapted to engage the upper surfaces of the ring 45.

The upper portion 47 of the tensioning rod 46 serves for the reception of one or more small weights 39 of ring shape, if desired, for adjusting the tension. The location of the tensioning rod 46 and the accessibility of the upper portion 47 thereof permits of ready adjustment of the yarn tension from the exterior. The lower portion 48 of the rod extends downwardly through the yarn guide 44, and within the upper portion of the guide tube 43 and serves to hold the rod 46 in position. The frusto-conical portion 49 aids in permitting the tension rod 46 to maintain its alinement.

The yarn from the yarn package C preferably has a flat tension ring 38 of non-magnetic material carried thereon. The ring 38 facilitates the withdrawal of the yarn by applying a tension to overcome the irregularities of the winding of the yarn or the yarn package C and also prevents the yarn from being caught beneath the cap 40. The ring 38 is restrained by the cylinder 35.

A plate 50 is provided of non-magnetic material, and is disposed so that its upper surface is level with or slightly below the terminal ends of the guide tubes 15. The plate 50 may be supported in any suitable manner by frame of the machine (not shown) and has secured thereto, at the lower portion thereof, a plurality of magnets 51 of high intensity magnetic material. The magnets 51 are equally spaced in a circular arrangement and are radially disposed with respect to the magnets 22. The magnets 51 and the magnets 22 are of complemental polarity and serve to restrain and hold the base 21 and the parts carried thereby against rotation. By the use of three sets of magnets, with their corresponding disposition of supporting and restraining forces, any tendency of the base 21 to rock, sway or hunt is obviated and undesired interference of the lines of flux from the magnets is avoided.

The mode of operation of the twisting machine in accordance with the present invention will now be pointed out.

The winding mechanism (not shown) is operated, and upon rotation of the whirl or driving pulley 11 by the belt 12 the fly disk 14 is rotated with respect to the base 21. The yarn, drawn from the yarn package C, passes through the ring 38 which rides upwardly and downwardly with the yarn, thereby compensating for the variations in tension arising from the irregularities of the winding of the yarn package C. The yarn passes around the lower end of the skirt portion 42 of the cap 40, and then upwardly between the skirt portion 42 and the cylinder 35. The yarn then passes upwardly across the upper surface of the cap 40, revolving around the center provided by the tubular yarn guide 44. The yarn, upon its entry into the yarn guide tube 44, has tension imparted thereto by the ring 45 and the tension rod 46. The yarn then passes downwardly within the tubular yarn guide 44 and the guide tube 43 and through the opening 36 in the guide block 37 and the guide 25, and through openings 17 and 18, and beneath the fly disk 14, thence upwardly through the guide tube 15, where it balloons about the exterior of the cylinder 35 in its passage to the guide (not shown) above the cap 40.

The base 21 is held against rotation and against rocking, swaying and hunting by the magnetic attraction between the magnets 22 and the magnets 51.

The cylinder 35 prevents undesired air currents around the yarn package C and prevents any entanglement of the portion of the yarn being drawn from the yarn package C with the portion of the

yarn which is in its upward movement from the guide tube 15.

The tension of the yarn may be readily adjusted as desired by varying the weight effective on the tension rod 46 in accordance with the particular character and weight of the yarn to which the twist is applied and the speed of the operation.

It will be noted that an adjustable fixed tension may be imparted to the yarn by the tensioning device 31 to which access may be had upon removal of the yarn package C. In some instances it is desirable to adjust the tension from the exterior, particularly to regulate the ballooning of the yarn after it leaves the yarn guide tube 15. The tension rod 46 is particularly advantageous for this purpose since the effective weight thereof, transmitted to the ring 45 may be readily varied as desired.

As illustrated in Fig. 3, the tension rod 46 may be replaced, for certain types of yarn and for certain speeds of operation, by a yarn follower 55. The yarn follower 55 includes an eye portion 56 of C shape and of porcelain or other wear-resistant material. The eye portion C is carried above the cap 40 and outwardly with respect to the guide 44 on a supporting wire 57, the lower end of the wire 57 extending downwardly within and below the guide 44.

In the use of the yarn follower 55 the yarn from the yarn package C passes upwardly as before from within the cylinder 35, then upwardly through the eye portion 56 and downwardly through the guide 44, as before. The follower 55 rotates around the axis provided by the guide 44 as the yarn passes through the eye portion 56.

The threading of the yarn may be readily effected.

With the cap 40 removed, a yarn package C is mounted on the plate 23 with its lower end embracing the projection 24. The cap 40 is positioned on the yarn package C and with the guide tube 43 extending downwardly within the interior of the yarn package C. The yarn from the yarn package C is then passed through the ring 38 and brought around the lower end of the skirt 42 of the cap 40, and is inserted with a wire or long flexible needle downwardly through the tubular yarn guide 44, the guide tube 43, the guide block 37, the tension arms 32, the yarn guide 25, and the openings 17 and 18 in the bushing 16 and the driving pulley 11. The yarn end is then drawn upwardly through the guide tube 15 and is inserted through a suitable guide (not shown) above the cap 40 for winding in any desired manner. The ring 45 and tension rod 46, or the follower 55, may then be placed in position and the twisting of the yarn carried out.

I claim:

1. In a twisting machine, a vertical rotatable spindle, a fly member carried by said spindle, a yarn package supporting base, means for holding said base against rotation, a cap, a yarn package interposed between said base and said cap and supporting said cap, said cap having a skirt portion extending downwardly with respect to the upper portion of the yarn package for guiding the yarn from the yarn package in the upward movement thereof, and having a central opening for the downward passage of the yarn, and a shield carried by said base and surrounding said yarn package, said shield and said skirt portion being spaced for the upward passage of the yarn from the yarn package.

2. In a twisting machine, a vertical rotatable spindle, a fly member carried by said spindle, a yarn package supporting base mounted on said spindle, means for holding said base against rotation, a cap, a yarn package interposed between said base and said cap, said cap having a central opening for the downward passage of the yarn, and a shield carried by said base and surrounding said yarn package, said shield being spaced from said cap for the passage of the yarn from the yarn package to said opening.

3. In a twisting machine, a vertical rotatable spindle, a fly member carried by said spindle and having a yarn guide, a yarn package supporting base mounted on said spindle, means for holding said base against rotation, a cap, a yarn package interposed between said base and said cap, said cap having a central opening for the downward passage of the yarn, and a shield carried by said base and surrounding said yarn package, and inwardly disposed with respect to the said yarn guide, said shield being spaced from said cap for the passage of the yarn from the yarn package to said opening and the lower exterior surface of the shield being inwardly inclined to provide clearance for the yarn from said yarn guide.

4. In a twisting machine, a vertical rotatable spindle, a fly member carried by said spindle and having a yarn guide, a yarn package supporting base mounted on said spindle, means for holding said base against rotation, a cap, a yarn package interposed between said base and said cap, said cap having a central opening for the downward passage of the yarn, and a shield carried by said base and surrounding said yarn package, and inwardly disposed with respect to the said yarn guide, said shield being spaced from said cap for the passage of the yarn from the yarn package to said opening and the lower exterior surface of the shield being of reduced diameter to provide clearance for the yarn from said yarn guide.

5. In a twisting machine, a vertical rotatable spindle, a fly member carried by said spindle, a yarn package supporting base, a bearing interposed between said spindle and said base, means for holding said base against rotation, a cap, a yarn package interposed between said base and said cap and supporting said cap, said cap having a central opening for the downward passage of the yarn and a skirt portion extending downwardly with respect to the upper portion of the yarn package for guiding the yarn from the yarn package in the movement thereof to said opening, and a shield carried by said base and surrounding said yarn package, said shield and said skirt portion being spaced for the upward passage of the yarn from the yarn package and the upper end of said shield and the lower end of said skirt being disposed in overlapping relationship.

6. In a twisting machine, a vertical rotatable spindle, a fly member carried by said spindle and having a peripheral yarn guide, a yarn package supporting base, a bearing interposed between said spindle and said base, means for holding said base against rotation, a cap, a yarn package interposed between said base and said cap, said cap having a central opening for the downward passage of the yarn, and a shield carried by said base and surrounding said yarn package and inwardly disposed with respect to the path of said yarn guide, said shield being spaced from said cap for the passage of the yarn from the yarn package to said opening.

7. In a twisting machine, a vertical rotatable spindle, a fly member carried by said spindle and having a peripheral yarn guide, a yarn package

supporting base mounted on said spindle and held against rotation with respect to said spindle, a cap, a yarn package interposed between said base and said cap, said cap having a central opening for the downward passage of the yarn from the yarn package and a skirt portion extending downwardly with respect to the upper portion of the yarn package for guiding the yarn from the yarn package in the upward movement thereof to said opening, a cylindrical shield carried by said base and surrounding said yarn package and disposed inwardly with respect to the path of said yarn guide, said shield and said skirt portion having overlapping portions spaced for the passage of the yarn from the yarn package to said opening.

8. In a twisting machine, a vertical rotatable spindle, a fly member carried by said spindle and movable therewith, a yarn package supporting base mounted on said spindle and held against rotation therewith, a cap supported above said base and having a central opening for downward passage of the yarn, a yarn package interposed between said cap and said base, tensioning means carried by said base for imparting a tension to the yarn after its passage through the cap, and yarn tensioning means carried by said cap and adjustable exteriorly of said cap.

9. In a twisting machine, a vertical rotatable spindle, a fly member carried by said spindle and movable therewith, a yarn package supporting base mounted on said spindle and held against rotation therewith, a cap supported above said base and having a central opening for downward passage of the yarn, a yarn package interposed between said cap and said base, tensioning means carried by said base for imparting a tension to the yarn after its passage through the cap, and adjustable yarn tensioning means carried by said cap and having an exterior adjusting portion.

ROBERT J. BARTHOLOMEW.

REFERENCES CITED

The following references are of record in the file of this patent:

UNITED STATES PATENTS

Number	Name	Date
1,983,413	Spagnolo	Dec. 4, 1934
2,019,631	Pool	Nov. 5, 1935
2,127,921	Kent	Aug. 23, 1938
2,173,762	Morton	Sept. 19, 1939
2,233,645	Smith	Mar. 4, 1941
2,240,153	Carter et al.	Apr. 29, 1941
2,374,085	Gwaltney et al.	Apr. 17, 1945
2,391,307	Gwaltney et al.	Dec. 18, 1945
2,397,153	Naumann	Mar. 26, 1946

FOREIGN PATENTS

Number	Country	Date
570,346	Germany	Feb. 15, 1933
598,752	Germany	June 19, 1934
704,793	Germany	Apr. 7, 1941