B. FORD.

METHOD OF CHANGING THE COMPOSITION OF IRON AND STEEL.

APPLICATION FILED AUG. 3, 1909.

1,205,611.

Patented Nov. 21, 1916.

3 SHEETS—SHEET 1.

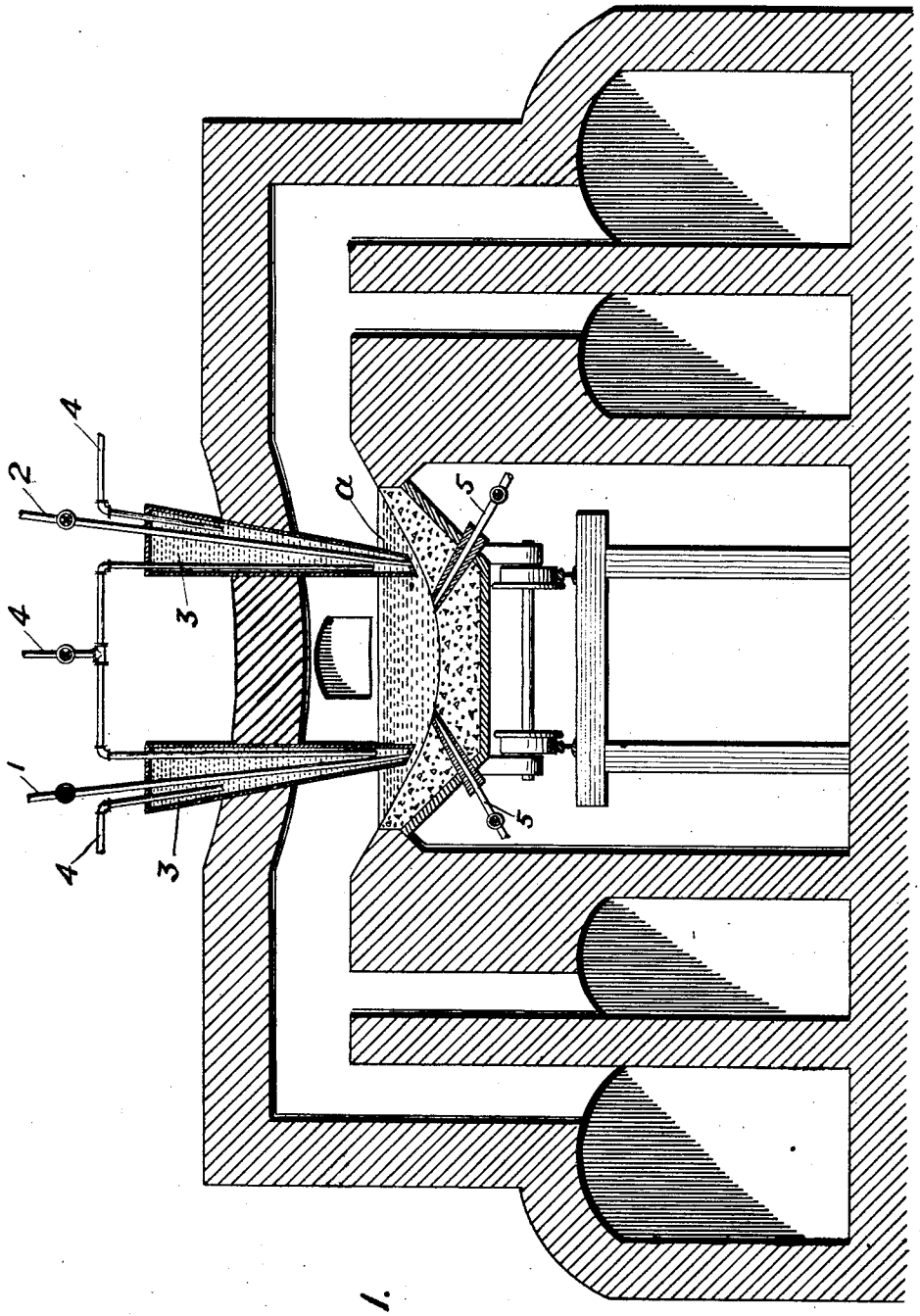

FIG. 1.

WITNESSES:

Robt. R. Kitchel.

K. W. Gilligan

INVENTOR

Bruce Ford

BY

Augustus B. Stoughton

ATTORNEY.

B. FORD.

METHOD OF CHANGING THE COMPOSITION OF IRON AND STEEL.

APPLICATION FILED AUG. 3, 1909.

1,205,611.

Patented Nov. 21, 1916.

3 SHEETS—SHEET 2.

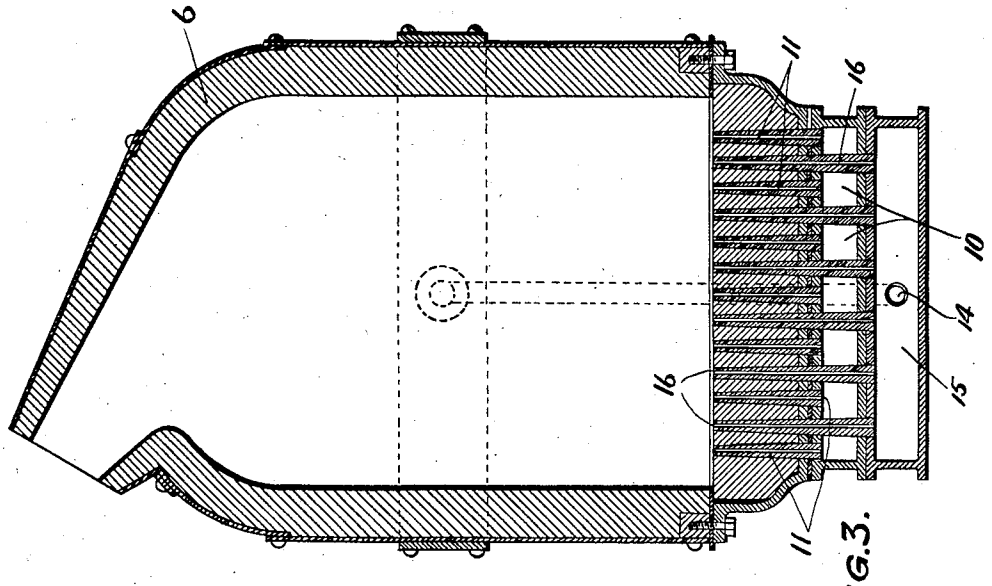

FIG. 3.

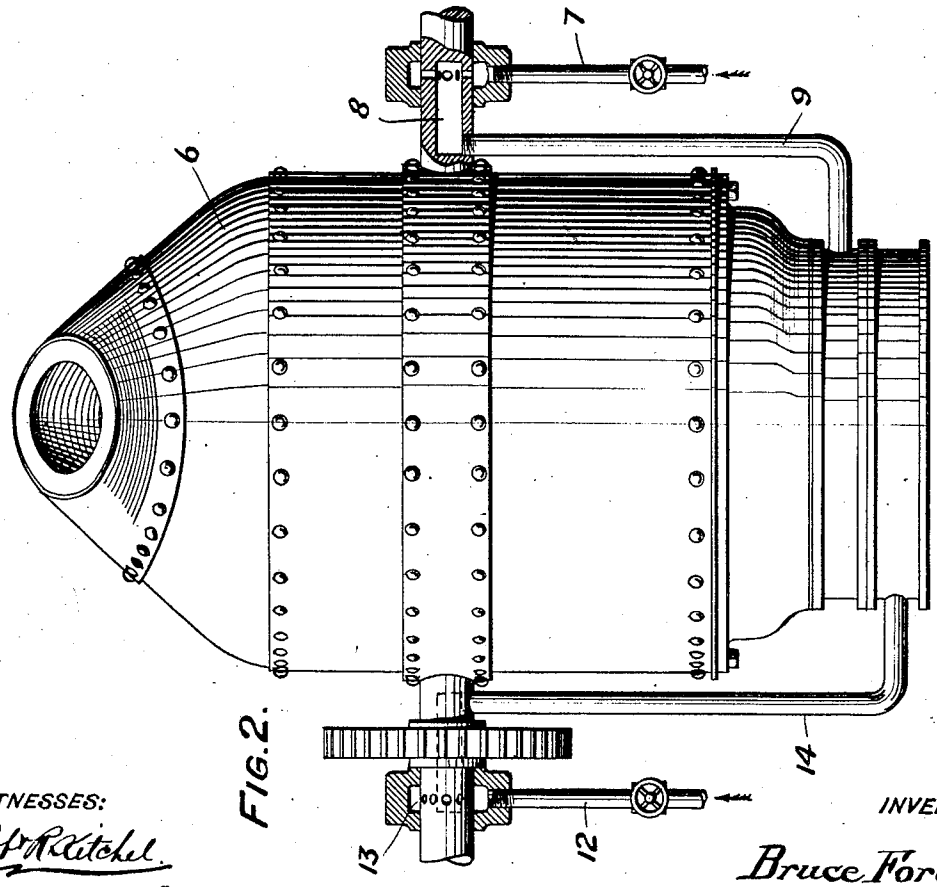

FIG. 2.

WITNESSES:

Robt. R. Ritchel.

K. M. Gilligan

INVENTOR

Bruce Ford

BY

Augustus B. Stoughton

ATTORNEY.

B. FORD.

METHOD OF CHANGING THE COMPOSITION OF IRON AND STEEL.

APPLICATION FILED AUG. 3, 1909.

1,205,611.

Patented Nov. 21, 1916.

3 SHEETS—SHEET 3.

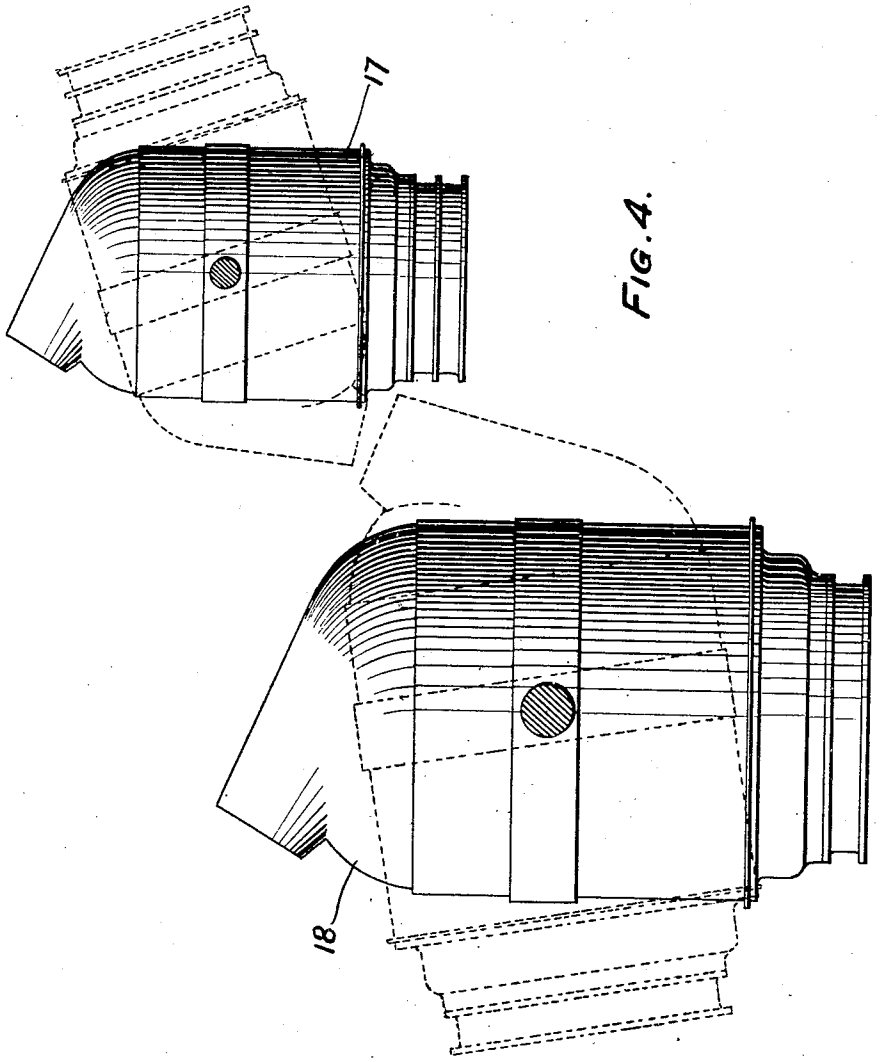

FIG. 4.

WITNESSES:

Robt. R. Ritchel.

K. M. Gilligan

INVENTOR

Bruce Ford

BY

Augustus B. Stoughton

ATTORNEY.

UNITED STATES PATENT OFFICE.

BRUCE FORD, OF PHILADELPHIA, PENNSYLVANIA.

METHOD OF CHANGING THE COMPOSITION OF IRON AND STEEL.

1,205,611. Specification of Letters Patent. Patented Nov. 21, 1916.

Application filed August 3, 1909. Serial No. 511,008.

To all whom it may concern:

Be it known that I, BRUCE FORD, a citizen of the United States, residing at Philadelphia, in the county of Philadelphia and State of Pennsylvania, have invented a new and useful Method of Changing the Composition of Iron and Steel, of which the following is a specification.

The principal object of the present invention is to provide for expeditiously, accurately and economically controlling, changing or fixing the carbon contents or hardening constituents of iron or steel.

In general terms the invention comprises the method which consists in preparing two batches of molten iron or metal, completely decarburizing one batch, super-carburizing the other batch to the point of complete saturation with carbon, and then mixing the two batches in suitable proportions to produce a mixture or product containing the definite desired proportion of carbon.

The method may be practised by means of various types of apparatus, but in the drawings I have illustrated several types.

Figure 1, is a sectional view illustrating an open hearth, regenerative furnace adapted for use in the practice of the invention. Figs. 2 and 3, are respectively an elevation and a transverse section of a Bessemer converter adapted for use in the practice of the invention, and Fig. 4, is a side view partly in section illustrating a complete apparatus in connection with which the invention may be practised.

Having reference to Fig. 1, I will proceed to describe one way of preparing iron or steel saturated with carbon and suitable for use as a substitute for white cast iron or spiegeleisen. *a*, represents a mass of metal, as iron, which is melted as by the ordinary and well understood operation of the furnace. Into this melted mass, however produced, there is introduced or injected a medium adapted by contact to operate absorptively and give up carbon to the mass. Examples of such a medium are oil, turpentine, gasolene, acetylene and appropriate forms of cyanogen, but the invention is not to be confined to these examples. The medium, for convenience, is preferably in fluid (liquid or gaseous) form. The medium may be introduced by those skilled in the art in quantity sufficient to saturate the metal with carbon, thus suiting it for use as a substitute for white cast iron or spiegeleisen, but it may differ from the latter in that it may be free from manganese. One way of ascertaining when the metal is saturated is to observe the color of the flame rising from the metal. This medium may be introduced from above by means of valved connections or injectors 1 and 2, shown as arranged through water cooled holders 3, so as to project the medium into the mass of metal. 4, are connections for water cooling these holders. 5, are valved connections for projecting the medium upward into the mass of the metal so that in both cases the mass of the metal is impregnated with the medium.

A description will now be given of another way in which to make iron or steel completely saturated with carbon and useful as a substitute for spiegeleisen.

Having reference to Figs. 2 and 3, in the ordinary operation of the converter 6, the same is filled with a molten mass of iron. This converter is shown as provided with air connections including the valved member 7, a trunnion 8, a pipe 9, a chamber 10, and openings 11, through the bottom of the converter. A medium such as described is passed through the mass of molten iron, for example, by way of the valved connections 12, 13, 14, 15, and 16. The two sets of connections shown, permit of the introduction of air and then of the medium without commingling the two. The quantity of medium introduced, as well as its time of introduction are under control because it, as has been stated, is introduced through valved connections. In the described process the molten iron or metal has injected into or through its body or mass the hydrocarbon gas or vapor or other appropriate medium from which the molten iron or metal takes on carbon by absorption, thus changing its carbon contents, and the change occurs rapidly because at high temperatures, such as that of melting, the metal takes on carbon with great rapidity. Furthermore the metal can be super-carburized or saturated as the degree of change can be accurately controlled by regulating the duration of the introduction of the medium. By repeatedly and alternately blowing air and then introducing the medium it is possible to eliminate many undesirable constituents from impure metal.

I will now describe the feature of invention which I desire to claim and cover in and by this application. Having reference

to Fig. 4, 17, is a converter substantially like the converter shown in Figs. 2 and 3. It is arranged to discharge its contents into the ordinary Bessemer converter 18, which may receive air through it and be operated in the usual manner. The metal in the converter 17 is treated, according to my invention, to saturation with carbon and then introduced into the molten metal in the converter 18, after the latter has had air blown through it and as is customary in the Bessemer process is completely de-carburized. In other words the product prepared in the converter 17 may be used in the converter 18 as a substitute for white cast iron or spiegeleisen as may also the product prepared by the use of the apparatus shown in Figs. 1, 2, and 3. Inasmuch as the super-carburized metal is used like spiegeleisen the proportion used depends upon the carbon content required for the finished product. It is, of course, to be understood that this super-carburized iron always contains substantially the same percentage of carbon and therefore, in its use, there is no necessity of a separate chemical analysis of each batch thereof; such analysis having heretofore been necessary where spiegeleisen or other carburizing material is employed for the purpose of recarburization.

What I claim is:

In the art of making iron or steel of definite carbon content, the improvement which consists in melting and completely decarburizing a mass of the metal, melting and super-carburizing to saturation another mass of the metal, and mixing the masses of molten metal in predetermined proportions thereof to make the iron or steel of definite carbon content.

In testimony whereof I have hereunto signed my name.

BRUCE FORD.

Witnesses:

BENJ. S. HELMER,

SOPHIE DU PONT FORD.