Office de la Propriété Intellectuelle du Canada
Un organisme d'Industrie Canada

Canadian Intellectual Property Office
An agency of Industry Canada

CA 2598818 C 2013/01/22

(11)(21) 2 598 818

(12) BREVET CANADIEN
CANADIAN PATENT

(13) C

(86) Date de dépôt PCT/PCT Filing Date: 2006/02/24
(87) Date publication PCT/PCT Publication Date: 2006/08/31
(45) Date de délivrance/Issue Date: 2013/01/22
(85) Entrée phase nationale/National Entry: 2007/08/23
(86) N° demande PCT/PCT Application No.: US 2006/006693
(87) N° publication PCT/PCT Publication No.: 2006/091867
(30) Priorité/Priority: 2005/02/25 (US11/066,927)

(51) Cl.Int./Int.Cl. *E04B 2/00* (2006.01)
(72) Inventeur/Inventor:
ISKE, BRIAN, US

(73) Propriétaire/Owner:
W.R. GRACE & CO.-CONN., US

(74) Agent: FINLAYSON & SINGLEHURST

(54) Titre : DISPOSITIF DESTINE A LA CREATION DE BARRIERE IN SITU POST-INSTALLATION ET PROCEDE D'UTILISATION CORRESPONDANT

(54) Title: DEVICE FOR POST-INSTALLATION IN-SITU BARRIER CREATION AND METHOD OF USE THEREOF

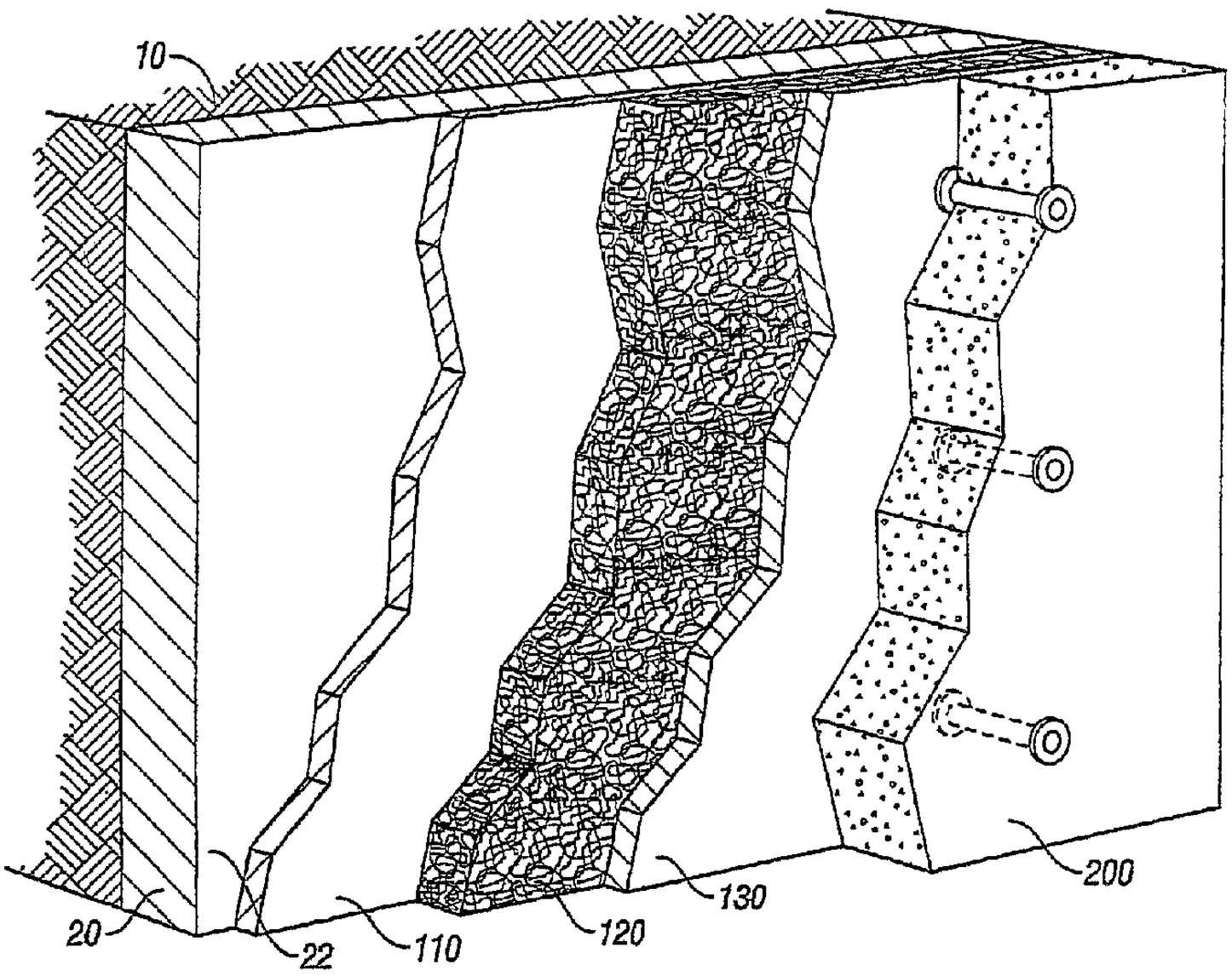

(57) Abrégé/Abstract:
The present invention relates to a device for post-installation in-situ barrier creation. A multi-layered device provides a medium for of remedial substances such as waterproofing resins or cements, insecticides, mold preventatives, rust retardants and the like. The multi-layer device preferably consists of three conjoined layers: first layer, intermediate layer, and second layer, and at least one piping. The first layer is preferably semi-permeable; the second layer is a non-permeable layer; the intermediate layer is a void-inducing layer. The second layer, intermediate layer, and first layer are fixedly attached, with the intermediate layer interposed between the second layer and the first layer. The multi-layered device is fixedly attached to shoring system exterior surface. At least one piping is engagedly attached to a panel of the multi-layered device. A structural construction material is constructed exterior the multi-layer device. Thereafter, a free flowing substance can be pumped to the multi-layered device.

(12) INTERNATIONAL APPLICATION PUBLISHED UNDER THE PATENT COOPERATION TREATY (PCT)

(19) World Intellectual Property Organization
International Bureau

(43) International Publication Date
31 August 2006 (31.08.2006)

PCT

(10) International Publication Number
WO 2006/091867 A2

(51) International Patent Classification:
E04B 2/00 (2006.01)

(21) International Application Number:
PCT/US2006/006693

(22) International Filing Date:
24 February 2006 (24.02.2006)

(25) Filing Language: English

(26) Publication Language: English

(30) Priority Data:
11/066,927 25 February 2005 (25.02.2005) US

(71) Applicant and
(72) Inventor: **ISKE, Brian** [US/US]; 86 Spindlewick Drive, Nashau, New Hampshire 03062 (US).

(74) Agent: **HUDSON, James, E., III**; Crain, Caton & James, P.C., 1401 McKinney, Suite 1700, Houston, Texas 77010-4035 (US).

(81) Designated States *(unless otherwise indicated, for every kind of national protection available)*: AE, AG, AL, AM, AT, AU, AZ, BA, BB, BG, BR, BW, BY, BZ, CA, CH, CN, CO, CR, CU, CZ, DE, DK, DM, DZ, EC, EE, EG, ES, FI, GB, GD, GE, GH, GM, HR, HU, ID, IL, IN, IS, JP, KE, KG, KM, KN, KP, KR, KZ, LC, LK, LR, LS, LT, LU, LV, LY, MA, MD, MG, MK, MN, MW, MX, MZ, NA, NG, NI, NO, NZ, OM, PG, PH, PL, PT, RO, RU, SC, SD, SE, SG, SK, SL, SM, SY, TJ, TM, TN, TR, TT, TZ, UA, UG, US, UZ, VC, VN, YU, ZA, ZM, ZW.

(84) Designated States *(unless otherwise indicated, for every kind of regional protection available)*: ARIPO (BW, GH, GM, KE, LS, MW, MZ, NA, SD, SL, SZ, TZ, UG, ZM, ZW), Eurasian (AM, AZ, BY, KG, KZ, MD, RU, TJ, TM), European (AT, BE, BG, CH, CY, CZ, DE, DK, EE, ES, FI, FR, GB, GR, HU, IE, IS, IT, LT, LU, LV, MC, NL, PL, PT, RO, SE, SI, SK, TR), OAPI (BF, BJ, CF, CG, CI, CM, GA, GN, GQ, GW, ML, MR, NE, SN, TD, TG).

Published:
— *without international search report and to be republished upon receipt of that report*

For two-letter codes and other abbreviations, refer to the "Guidance Notes on Codes and Abbreviations" appearing at the beginning of each regular issue of the PCT Gazette.

(54) **Title:** DEVICE FOR POST-INSTALLATION IN-SITU BARRIER CREATION AND METHOD OF USE THEREOF

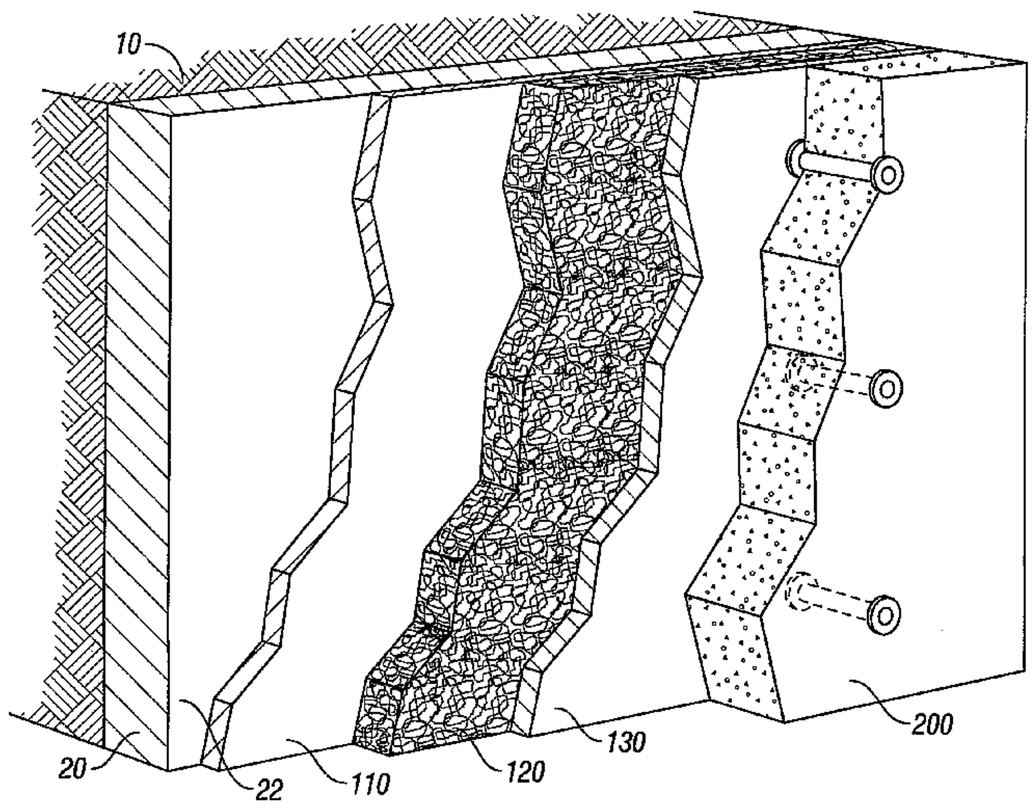

(57) **Abstract:** The present invention relates to a device for post-installation in-situ barrier creation. A multi-layered device provides a medium for of remedial substances such as waterproofing resins or cements, insecticides, mold preventatives, rust retardants and the like. The multi-layer device preferably consists of three conjoined layers: first layer, intermediate layer, and second layer, and at least one piping. The first layer is preferably semi-permeable; the second layer is a non-permeable layer; the intermediate layer is a void-inducing layer. The second layer, intermediate layer, and first layer are fixedly attached, with the intermediate layer interposed between the second layer and the first layer. The multi-layered device is fixedly attached to shoring system exterior surface. At least one piping is engagedly attached to a panel of the multi-layered device. A structural construction material is constructed exterior the multi-layer device. Thereafter, a free flowing substance can be pumped to the multi-layered device.

WO 2006/091867 A2

TITLE OF THE INVENTION

Device for Post-Installation In-Situ Barrier Creation and Method of Use Thereof.

TECHNICAL FIELD

The present invention relates to a device for post-installation in-situ barrier creation, and more particularly to a multi-layered device providing a medium for post-installation injection of remedial substances such as waterproofing resins or cements, insecticides, mold preventatives, rust retardants and the like.

BACKGROUND ART

It is common in underground structures, such as tunnels, mines and large buildings with subterranean foundations, to require that the structures be watertight. Thus, it is essential to prevent groundwater from contacting the porous portions of structures or joints, which are typically of concrete. It is also essential to remove water present in the voids of such concrete as such water may swell during low temperatures and fracture the concrete or may contact ferrous portions of the structure, resulting in oxidation and material degredation. Therefore, devices have been developed for removing water from the concrete structure and for preventing water from contacting the concrete structure.

Attempts at removing groundwater from the concrete structure have included a permeable liner and an absorbent sheet. Both absorb adjacent water, carrying it from the concrete structure. This type is system is limited, however, because it cannot introduce a fluid or gaseous substance to the concrete and as the water removed is only that in contact with the system. Additionally, this system does not provide a waterproof barrier.

Among attempts at preventing water from contacting the concrete structure has been the installation of a waterproof liner between a shoring system and the concrete form. This method fails if the waterproof liner is punctured with rebar or other sharp objects, which is common at construction sites. In such an occurrence, it may be necessary for the concrete form to be disassembled so a new waterproof liner may be installed. Such deconstruction is time consuming and expensive. It would therefore be

preferable to install a system that provides a secondary waterproof alternative, should the initial waterproof layer fail. Additionally, attempts at preventing water from contacting a concrete structure have included installation of a membrane that swells upon contact with water. While this type of membrane is effective in absorbing the water and expanding to form a water barrier, this type of membrane is limited in its swelling capacity. Therefore, it would be preferable to provide a system that is unlimited in its swelling capacity by allowing a material to be added until the leak is repaired.

Another attempt to resolving this problem was disclosed in "Achieving Dry Stations and Tunnels with Flexible Waterproofing Membranes," published by Egger, et al. on March 02, 2004 discloses a flexible membrane for waterproofing tunnels and underground structures. The flexible membrane includes first and second layers, which are installed separately. The first layer is a nonwoven polypropylene geotextile, which serves as a cushion against the pressure applied during the placement of the final lining where the membrane is pushed hard against the sub-strata. The first layer also transports water to the pipes at the membrane toe in an open system. The second layer is commonly a polyvinyl chloride (PVC) membrane or a modified polyethylene (PE) membrane, and is installed on top of the first layer. The waterproof membrane is subdivided into sections by welding water barriers to the membrane at their base. Leakage is detected through pipes running from the waterproof membrane to the face of the concrete lining. The pipes are placed at high and low points of each subdivided section. If leakage is detected, a low viscosity grout can be injected through the lower laying pipes. However the welding and the separate installation of the first and second layers make this waterproof system difficult to install, thus requiring highly skilled laborers.

It would therefore be advantageous to provide an in-situ multi-layered device for post-installation concrete sealing, and more particularly a providing a medium for post-installation injection of waterproofing resin.

DISCLOSURE OF THE INVENTION

One aspect of the invention is to provide a single application which includes a first layer providing an initial waterproof surface. Another aspect of the invention is to provide a secondary, remedial layer that is operable should the first layer fail. A further

apect of the invention is to provide that such multi-layer system be quickly and easily installed. An additional aspect of the present invention allows selective introduction of a fluid substance to specific areas of a structure.

Accordingly, it is an aspect of the present invention to provide a dual-layered layer that:

- has a waterproof layer providing a first level of protection from water penetration
- has a second, remedial protection from water penetration through delivering a fluid substance to a structure
- allows the introduction of a fluid substance in situ
- allows selective introduction of a fluid substance to specific areas of a structure
- affixable to a variety of surfaces
- easily and quickly installable

A further aspect of the present invention provides for a multi-layered device for post-installation injection of a fluid remedial substance to a structure in situ, the structure having thickness, the device including a first layer composed of a material being permeable to the fluid remedial substance but at least nearly impermeable to a structural construction material to be installed against the first layer to form the structure, the first layer adapted to communicate with the structure to permit introduction of the fluid remedial substance to the structure. A second layer impermeable having an interior side and an exterior side, the second layer interior side facing the first layer. At least one piping adapted to pass through the structure and communicate with the first layer and a source of the fluid remedial substance to permit injection of the fluid remedial substance into the first layer.

Another aspect of the present invention provides for a multi-layered device for post-installation injection of a fluid remedial substance to a structure in-situ, the structure having thickness, the device including a first layer composed of a material being permeable to the fluid remedial substance but at least nearly impermeable to a structural construction material to be installed against the first layer to form the structure, the first layer adapted to communicate with the structure to permit introduction of the fluid remedial substance to the

structure. A second layer impermeable having an interior side and an exterior side, an intermediate layer between the first layer and the second layer, the intermediate layer being permeable to the fluid remedial substance, the first layer adhering to one side of the intermediate layer and the second layer interior side adhering to an opposite side of the intermediate layer. The first layer and the intermediate layer having an aligned side edge, and the second layer including a second layer extension that extends beyond the side edge. At least one piping adapted to pass through the structure and communicate with the first layer and a source of the fluid remedial substance to permit injection of the fluid remedial substance into the first layer.

A further aspect of the present invention provides for a method of providing a fluid remedial substance to a structure in-situ, the structure having thickness, the method includes providing at least two multi-layer devices a first layer composed of a material being permeable to the fluid remedial substance but at least nearly impermeable to a structural construction material, the first layer adapted for placement adjacent the structure, the first layer adapted to communicate with the structure to permit introduction of the fluid remedial substance to the structure; a second layer, the second layer being impermeable; and an intermediate layer permeable to the fluid remedial substance, the intermediate layer located between the first layer and the second layer; attaching a first multi-layer device to a shoring structure, such that the second layer of the device is against the shoring structure; attaching a second multi-layer device to the shoring structure in the same manner by overlapping it with the first multi-layer device; attaching at least one piping to each of the multi-layer devices; constructing a structural construction material form against the at least two multi-layer devices, and extending the at least one piping through the structural construction material form; applying a structural construction material onto the structural construction material form; and injecting the fluid remedial substance into the at least two substance delivery devices through the at least one piping.

An aspect provided by the present invention includes a method of providing a fluid remedial substance to a structure in situ, the structure having thickness, the method includes providing at least two multi-layer devices, each of the multi-layer devices including a first layer composed of a material being permeable to the fluid remedial substance but at least nearly impermeable to a structural construction material, the first layer adapted for placement adjacent the structure, the first layer adapted to communicate with

the structure to permit introduction of the fluid remedial substance to the structure; a second layer, the second layer being impermeable; and an intermediate layer permeable to the fluid remedial substance, the intermediate layer located between the first layer and the second layer; attaching a first multi-layer device to an excavated surface, such that the first layer of the device is against the excavated surface; attaching a second multi-layer device to the excavated surface in the same manner by overlapping it with the first multi-layer device; applying a structural construction material exterior to the at least two multi-layer devices; determining an area of failure in the at least two multi-layer devices; drilling a plurality of holes proximate the area of failure; and injecting the fluid remedial substance into the at least two multi-layer devices through at least one of the plurality of holes.

Other features and advantages of the invention will be apparent from the following description, the accompanying drawing and the appended claims.

BRIEF DESCRIPTION OF THE DRAWINGS

Figure 1 is a cross sectional view of the preferred embodiment of fluid delivery system.

Figure 2 is an isometric view of fluid delivery system with interlinking extension.

Figure 3 is a front view of a plurality of fluid delivery systems installed onto a shoring system.

Figure 4 is a side view of fluid delivery system installed between rebar matrix and shoring system.

Figure 5 is a side view of fluid delivery system installed between concrete structure and shoring system.

Figure 6 is an isometric view of compartmentalized fluid delivery system with fluid dispensing mechanisms attached.

DESCRIPTION OF THE PREFFERED EMBODIMENT

Fig 1 depicts the preferred embodiment of substance delivery system 100. Substance delivery system 100 is a multi-layer system for delivering substances to a structure, in situ, wherein the multi-layer system has at least two layers. In the preferred embodiment, substance delivery system 100 consists of three conjoined layers: first layer 130, intermediate layer 120, and second layer 110, and at least one piping 150 (shown in Figure 6). While the preferred embodiment of the invention consists of three layers joined together, alternate multiple-layer configurations are possible.

First layer 130 is preferably semi-permeable. In the preferred embodiment of the invention, first layer 130 should be made of a material suitable for permeating fluids therethrough, while prohibiting passage of concrete or other similar structural construction materials. A polypropylene or polyethylene non-woven geotextile is suitable. Additionally, other materials known in the art may be preferable depending on the particular application.

Second layer 110 is a non-permeable layer that is preferably waterproof and self-sealing. Second layer 110 can be an asphalt sheet, or other like material known in the art. Second layer 110 may have an adhesive affixed to second layer interior side 114, second layer exterior side 112, or both sides 112 and 114. Adhesive on second layer interior side 114 permits joining of adjacent panels of substance delivery system 100. Adhesive on second layer exterior side 112 aids in affixing substance delivery system 100 to shoring system 20 (seen in Figs. 4 and 5).

Intermediate layer 120 is a void-inducing layer, conducive to permitting a free-flow substance to flow throughout substance delivery system 100. Intermediate layer layer 120 may be formed by an open lattice of fibers of sufficient rigidity to maintain

the presence of the void when an inward force is exerted against substance delivery system 100. A polypropylene lattice or other similarly rigid material is preferable. The presence of intermediate layer 120 permits the channeling of free-flowing substances through substance delivery system 100. Intermediate layer 120 either channels water away from structural construction material 200, or provides a medium for transporting a free-flowing substance to structural construction material 200.

Referring to Fig. 2, second layer 110, intermediate layer 120, and first layer 130 are fixedly attached, with intermediate layer 120 interposed between second layer 110 and first layer 130. Second layer 110, intermediate layer 120, and first layer 130 are each defined by a plurality of sides, respectively forming second layer perimeter 116, intermediate layer perimeter 122, and first layer perimeter 132. In the preferred embodiment, intermediate layer perimeter 122 and first layer perimeter 132 are dimensionally proportional, such that permeable layer perimeter 122 and semi-permeable layer perimeter 132 are equivalently sized. Intermediate layer 120 and first layer 130 have a first width that extends horizontally across the layers. Second layer perimeter 116 is partially proportional to intermediate layer perimeter 122 and first layer perimeter 132, such that at least two sides of second layer perimeter 112 are equivalently sized to the corresponding sides of intermediate layer perimeter 122 and first layer perimeter 132. Second layer 110 has a second width that extends horizontally across second layer 110. The second width of second layer 110 is greater than the first width of intermediate layer 120 and first layer 130. Thus, referring to Figs. 2 and 3, when the bottom edges of first layer 130, intermediate layer 120, and second layer 110 are aligned, a second layer extension 114E outwardly extends an extension distance 115 from at least one side of first layer 130 and intermediate layer 120. Second layer extension 114E provides an underlay for installing substance

delivery system 100 thereupon, thereby eliminating potential weakness at the splice where panels of substance delivery system 100 abut.

In the preferred embodiment, seen in Figs. 4 and 5, shoring system 20 is installed to retain earth 10 when a large quantity of soil is excavated. Shoring system 20 includes common shoring techniques such as I-beams with pilings and shotcrete. Substance delivery system 100 is fixedly attached to shoring system exterior surface 22. As previously discussed, substance delivery system 100 can be attached to shoring system exterior surface 22 by applying an adhesive to second layer exterior side 112 and affixing second layer exterior side 112 to shoring system exterior surface 22. Alternatively, substance delivery system 100 can be attached to shoring system exterior surface 22 by driving nails, or other similar attachment means, through substance delivery system 100 and into shoring system 20. In the preferred embodiment second layer 110 is self-sealing. Thus, puncturing second layer 110 with a plurality of nails will negligibly affect second layer's 110 ability to provide a waterproof barrier.

Referring to Figs. 3 and 6, substance delivery system 100 canvases shoring system exterior surface 22. Substance delivery system 100 can be cut to any size, depending on the application. If a single substance delivery system 100 does not cover the desired area, a plurality of panels of substance delivery system 100 are used in concert to provide waterproof protection. As previously discussed, substance delivery system 100 may include second layer extension 114E for reinforcement at the abutment between adjacent panels of substance delivery system 100. Thus, a first panel of substance delivery system 100 is fixedly attached to shoring system exterior surface 22, with second layer extension 114E extending otwardly onto shoring system exterior surface 22. A second panel of substance delivery system 100 overlays

second layer extension 114E of the first panel of substance delivery system 100, thereby interlinking the first and second panels of substance delivery system 100. This process is repeated until the plurality of panels of substance delivery system 100 blanket shoring system exterior surface 22. The area of overlap between to adjacent panels of substance delivery system 100 preferably extends vertically. The upper terminal end of substance delivery system 100, proximate the upper edge of the constructed form (not shown), is sealed with sealing mechanism 105. Sealing mechanism 105 prevents the injected fluid from being discharged through the top of substance delivery system 100. Sealing mechanism 105 may be a clamp or other similar clenching device for sealing the upper terminal end of substance delivery system 100.

Referring to Fig. 6, division strip 162 is fixedly attached in a vertical orientation between the junction points of adjacent substance delivery systems 100. In the preferred embodiment division strip 162 has an adhesive surface, thereby allowing division strip 162 to be quickly and safely installed. Alternatively, division strip 162 may be installed by driving a plurality of nails, or similar attaching means, through division strip 162. Second layer extension 114E may be of such width as to accommodate division strip 162 and still permit joining to an adjacent panel of substance delivery system 100.

Division strip 162 is preferably comprised of a material that swells upon contact with water. When water interacts with division strip 162, division strip 162 outwardly expands, thereby eliminating communication between the abutting substance delivery systems 100. Thus, division strip 162 compartmentalizes each panel of substance delivery system 100. Compartmentalization enables selective injection of a fluid or gas into a predetermined panel of substance delivery system 100.

Alternatively, division strip 162 is formed from a non-swelling material. When division strip 162 is non- swelling, the structural construction material 200 forms around division strip 162, thereby filling in any voids and forming a seal between adjacent substance delivery systems 100.

Referring to Figs. 4 and 6, at least one piping 150 is engagedly attached to a panel of substance delivery system 100. Piping 150 is tubular, with inlet 152, outlet 154, and cylinder 156 extending therebetween. A plurality of teeth (not shown) outwardly extend from outlet 154, and engage first layer 130 as to permit injection of fluid into first layer 130 through to intermediate layer 120. Cylinder 156 extends through rebar matrix 210, with inlet 152 terminating exterior the structural construction material form (not shown). Cylinder 156 can be secured to rebar matrix 210 through ties, clamps, or other similar means of attachment. The number of piping 150 necessary is dependent on the size of chamber 160. In the preferred embodiment of the invention, piping 150 should be positioned at lower point 164, mid point 166, and upper point 168.

In the preferred embodiment depicted in Fig. 4, a structural construction material 200 is inserted into form (not shown). The structural construction material 200 can be concrete, plaster, stoneware, cinderblock, brick, wood, plastic, foam or other similar synthetic or natural materials known in the art. Second layer 110 of substance delivery system 100 provides the primary waterproof defense. If it is determined that second layer 110 has been punctured or has failed, resulting in water leaking to structural construction material 200, a free flowing substance can be pumped to the panel of substance delivery system 100 located proximate the leak. The free flowing substance is introduced to such panel of substance delivery system 100 via piping 150 in an upward progression, wherein the free flowing substance is

controllably introduced to lower point 164 of panel of substance delivery system 100, then to mid point 166 of panel of substance delivery system 100 , and then to upper point 168 of panel of substance delivery system 100. A dye may be added to the free flowing substance, allowing for a visual determination of when to cease pumping the free flowing substance to panel of substance delivery system 100. When the dye in the free flowing substance leaks out of structural construction material 200, thereby indicating that the selected substance delivery system 100 is fully impregnated, pumping is ceased.

First layer 130 permeates the free flowing substance into the space between first layer 130 and structural construction material 200. When the free flowing substance is a hydrophilic liquid, the free flowing substance interacts with any water present, thereby causing the free flowing substance to expand and become impermeable, creating an impenetrable waterproof layer. Thus, a secondary waterproof barrier can be created if a failure occurs in second layer 110. Alternatively, different free flowing substances may be introduced to substance delivery system 100, depending on the situation. If the integrity of structural construction material 200 is compromised, a resin for strengthening structural construction material 200 can be injected into substance delivery system 100 to repair structural construction material 200. Alternatively, a gas may be injected into substance delivery system 100 for providing mold protection, rust retardation, delivering an insecticide, or other similar purposes.

In a separate and distinct embodiment of the invention, intermediate layer 120 may be completely replaced with first layer 130.

In a separate and distinct embodiment of the invention, substance delivery system 100 is directly attached to the earth, such as in a tunnel or mine. In this

embodiment, substance delivery system 100 is inversely installed on tunnel surface. First layer 130 faces tunnel surface and second layer 110

inwardly faces tunnel space. Substance delivery system 100 can be fixedly attached by applying an adhesive to first layer 130, driving nails through substance delivery system 100, or similar attaching means known in the art. Substance delivery system 100 is installed in vertical segments, similar to the method described above for the preferred embodiment. However, the plurality of piping 150 is not necessary in the alternative embodiment.

Once substance delivery systems 100 is installed on tunnel surface, the structural construction material 200 can be installed directly onto second layer 110.

In the alternative embodiment (not shown) should a failure occur in substance delivery system 100, an operator can drill a plurality of holes through the structural construction material 200, ceasing when second layer 110 is penetrated. Such holes would provide fluid access to intermediate layer 120. A fluid substance (not shown) would then be pumped through the holes, thereby introducing the fluid substance to intermediate member 120. Intermediate layer 120 channels the fluid substance throughout substance delivery system 100, ultimately permitting first layer 130 to permeate the fluid substance therethrough. The foregoing description of the invention illustrates a preferred embodiment thereof. Various changes may be made in the details of the illustrated construction within the scope of the appended claims.

WHAT IS CLAIMED IS:

1. A multi-layered device for post-installation injection of a fluid remedial substance to a structure in situ, said device comprising:

a first layer, said first layer being permeable to said fluid remedial substance but at least nearly impermeable to a structural construction material to be installed against said first layer to form said structure;

a second layer, said second layer being impermeable, said second layer having an interior side and an exterior side, said second layer interior side facing said first layer; and

at least one piping adapted to pass through said structure and communicate with said first layer and a source of said fluid remedial substance to permit injection of said fluid remedial substance into said first layer.

2. The device of claim 1, wherein said fluid remedial substance comprises at least one substance selected from the group consisting of a waterproofing resin or cement, an insecticide, a mold preventative or a rust retardant; and wherein said structural construction material comprises concrete.

3. The device of claim 1 or 2, wnerein said device further comprises an adhesive on said second layer exterior side.

4. The device of claim 2, wherein said device further comprises:

an intermediate layer between said first layer and said second layer, wherein said intermediate layer is permeable to said fluid remedial substance.

5. The device of claim 4, wherein said intermediate layer comprises a plurality of rigid fibers.

6. The device of claim 4 or 5, wherein said first layer and said intermediate layer have an aligned side edge; and wherein said second layer includes a second layer extension that extends beyond said side edge.

7. The device of claim 4, wherein said device further comprises:

said at least one piping comprises a first piping and a second piping;

said first layer having a first layer bottom edge;

said first piping located proximate said first layer bottom edge;

said first layer having a top edge; and

said second piping being located proximate said first layer top edge.

8. The device of claim 7, wherein said device further comprises:

a third piping located between said first layer bottom edge and said first layer top edge.

9. A multi-layered device for post-installation injection of a fluid remedial substance to a structure in situ, said device comprising:

a first layer, said first layer being permeable to said fluid remedial substance but at least nearly impermeable to a structural construction material to be installed against said first layer to form said structure;

a second layer, said second layer being impermeable, said second layer having an interior side and an exterior side;

an intermediate layer between said first layer and said second layer, said intermediate layer being permeable to said fluid remedial substance, said first layer adhering to one side of said intermediate layer and said second layer interior side adhering to an opposite side of said intermediate layer;

said first layer and said intermediate layer having an aligned side edge, and said second layer including a second layer extension that extends beyond said side edge;

at least one piping adapted to pass through said structure and communicate with said first layer and a source of said fluid remedial substance to permit injection of said fluid remedial substance into said first layer.

10. The device of claim 9, wherein said fluid remedial substance comprises at least one substance selected from the group consisting of a waterproofing resin or cement, an insecticide, a mold preventative or a rust retardant, wherein said intermediate layer comprises an open lattice of fibers, wherein said structural construction material comprises concrete, and wherein said device further comprises an adhesive on said second layer exterior side.

11. A method of providing a fluid remedial substance to a structure in situ, said method comprising:

providing at least two multi-layer devices, each of said multi-layer devices comprising: a first layer, said first layer being permeable to said fluid remedial substance but at least nearly impermeable to a structural construction material; a second layer, said second layer being impermeable; and an intermediate layer permeable to said fluid

remedial substance, said intermediate layer located between said first layer and said second layer;

attaching a first multi-layer device to a shoring structure, such that said second layer of said device is against said shoring structure;

attaching a second multi-layer device to said shoring structure in the same manner by overlapping it with said first multi-layer device;

attaching at least one piping to each of said multi-layer devices;

constructing a structural construction material form against said at least two multi-layer devices, and extending said at least one piping through said structural construction material form;

applying a structural construction material onto said structural construction material form; and

injecting said fluid remedial substance into said at least two substance delivery devices through said at least one piping.

12. The method of claim 11, wherein said fluid remedial substance comprises at least one substance selected from the group consisting of a waterproofing resin or cement, an insecticide, a mold preventative or a rust retardant; and wherein said structural construction material comprises concrete.

13. The method of claim 11 or 12, wherein for each of said multi-layer devices said second layer is fixedly attached to one side of said intermediate layer; and said first layer is fixedly attached to an opposite side of said intermediate layer.

14. The method of any one of claims 11 to 13, further comprising:

applying an adhesive to said second layer of each of said multi-layer devices prior to attaching each of said multi-layer devices to said shoring system.

15. The method of any one of claims 11 to 14, further comprising:

driving a plurality of nails through each of said multi-layer devices.

16. The method of any one of claims 11 to 15, wherein each of said multi-layer devices includes a second layer extension, whereby said second layer extension extends beyond a side edge of said first layer and said intermediate layer, and wherein said second multi-layer device is overlapped onto said second layer extension of said first multi-layer device.

17. The method of any one of claims 11 to 16, further comprising installing at least one division strip along an edge of said multi-layer device.

18. The method of claim 17, wherein said at least one division strip is selected from a non-swelling material and a swelling material.

19. The method of claim 17 wherein said installing said at least one division strip further comprises:

positioning said at least one division strip along the edge of said second multi-layer device that abuts an edge of said first multi-layer device; and

fixedly attaching said at least one division strip therein.

20. The method of claim 19, wherein said fixedly attaching comprisesfixedly attaching said at least one division strip with an adhesive.

21. The method of claim 19 or 20, wherein said fixedly attaching comprises fixedly attaching said at least one division strip with a plurality of nails.

22. The method of any one of claims 11 to 21, wherein said attaching said at least one piping further comprises:

inserting a terminal end of said at least one piping into said first layer; and

securing the body of said piping to rebar proximate said body.

23. The method of any one of claims 11 to 22, wherein said attaching said at least one piping further comprises:

inserting a first piping into a lower point of said multi-layer device;

inserting a second piping into a mid point of said multi-layer device; and

inserting a third piping into an upper point of said multi-layer device.

24. The method of claim 23, further comprising:

initially injecting said fluid remedial substance to said lower point through said first piping;

subsequently injecting said fluid remedial substance to said mid point through said second piping; and

finally injecting said fluid remedial substance to said upper point through said third piping.

25. The method of claim 24, further comprising:

terminating said injection of said fluid remedial substance when said multi-layer device is fully impregnated.

26. A method of providing a fluid remedial substance to a structure in situ, said method comprising:

providing at least two multi-layer devices, each of said multi-layer devices comprising: a first layer, said first layer being permeable to said fluid remedial substance but at least nearly impermeable to a structural construction material; a second layer, said second layer being impermeable; and an intermediate layer permeable to said fluid remedial substance, said intermediate layer located between said first layer and said second layer;

attaching a first multi-layer device to an excavated surface, such that said first layer of said device is against said excavated surface;

attaching a second multi-layer device to said excavated surface in the same manner by overlapping it with said first multi-layer device;

applying a structural construction material exterior to said at least two multi-layer devices;

determining an area of failure in said at least two multi-layer devices;

drilling a plurality of holes proximate said area of failure; and

injecting said fluid remedial substance into said at least two multi-layer devices through at least one of said plurality of holes.

27. The method of claim 26, wherein said fluid remedial substance comprises at least one substance selected from the group consisting of a waterproofing resin or cement, an insecticide, a mold preventative or a rust retardant; and wherein said structural construction material comprises concrete.

28. The method of claim 26 or 27, wherein for each of said multi-layer devices said second layer is fixedly attached to one side of said intermediate layer; and said first layer is fixedly attached to an opposite side of said intermediate layer.

29. The method of any one of claims 26 to 28, further comprising:

applying an adhesive to said first layer of each of said multi-layer devices prior to fixedly attaching said first layer to said excavated surface.

30. The method of any one of claims 26 to 29, further comprising driving a plurality of nails through each of said multi-layer devices.

31. The method of any one of claims 26 to 30, further comprising installing at least one division strip along an edge of said multi-layer device.

32. The method of claim 31, wherein said at least one division strip is selected from a non-swelling material and a swelling material.

33. The method of claim 31 or 32, wherein said installing said at least one division strip further comprises:

positioning said at least one division strip along the edge of said second multi-layer device that abuts an edge of said first multi-layer device; and

fixedly attaching said at least one division strip therein.

34. The method of claim 33, wherein said fixedly attaching comprises fixedly attaching said at least one division strip with an adhesive.

35. The method of claim 33 or 34, wherein said fixedly attaching comprises fixedly attaching said at least one division strip with a plurality of nails.

36. The method of any one of claims 26 to 35, further comprising terminating said drilling after puncturing said multi-layer device.

37. The method of any one of claims 26 to 36, further comprising:

initially injecting said fluid remedial substance to a low point of said multi-layer device;

subsequently injecting said fluid remedial substance to a mid point of said multi-layer device; and

finally injecting said fluid remedial substance to an upper point of said multi-layer device.

38. The method of claim 37, further comprising:

terminating said injection of said fluid remedial substance when said multi-layer device is fully impregnated.

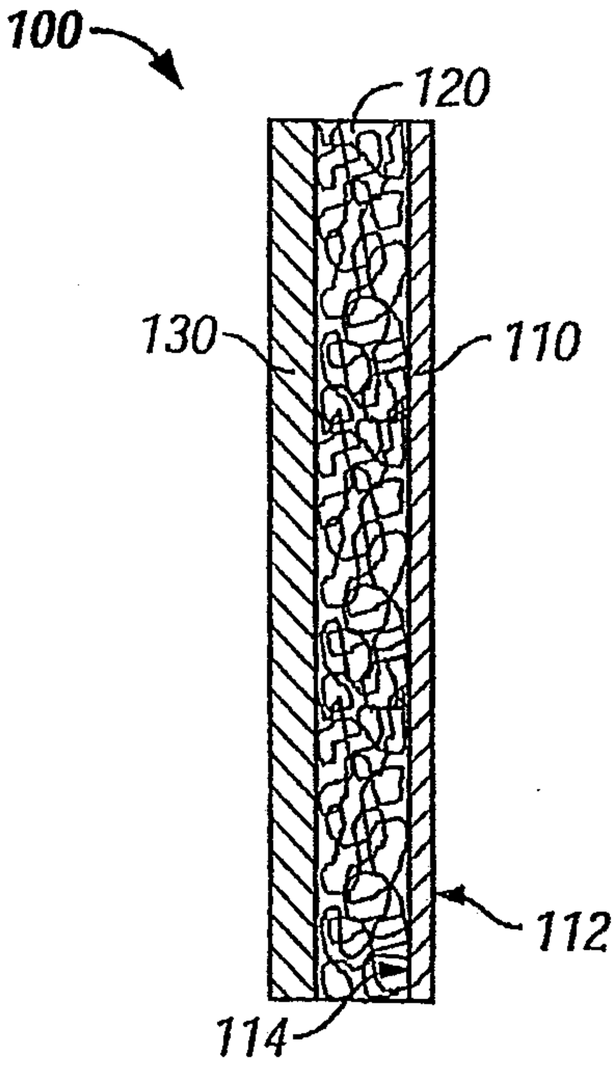

FIG. 1

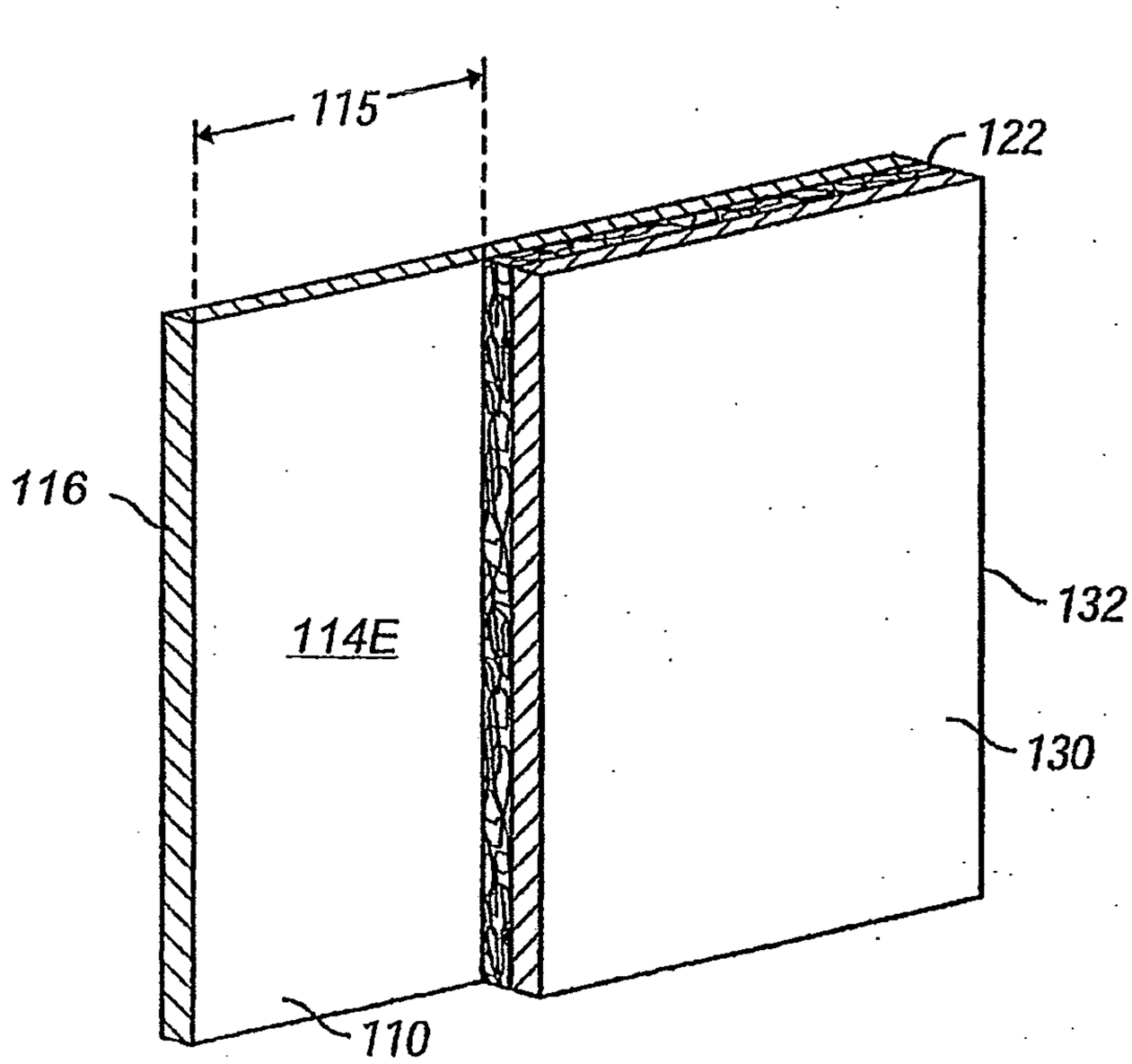

FIG. 2

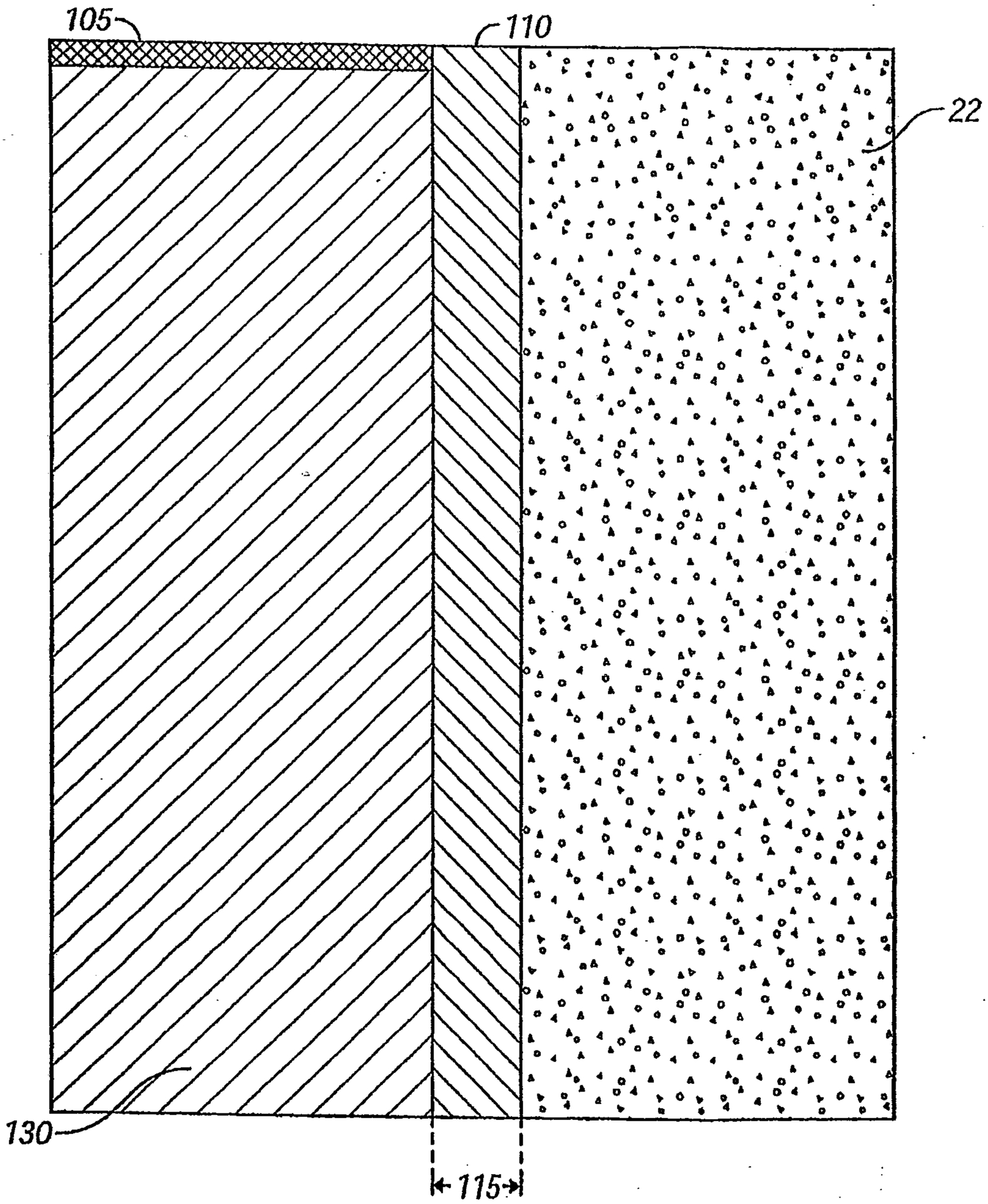

FIG. 3

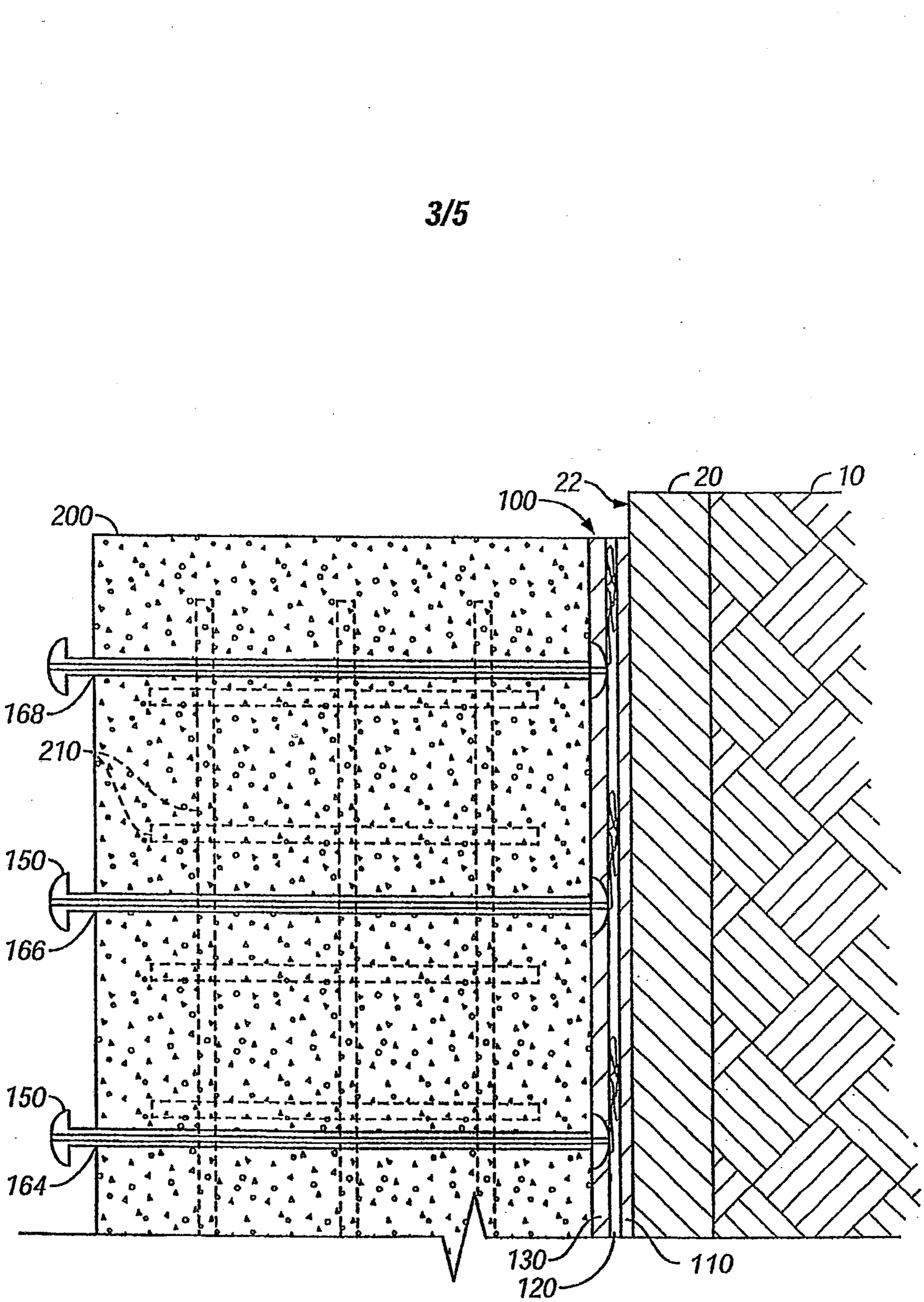

FIG. 4

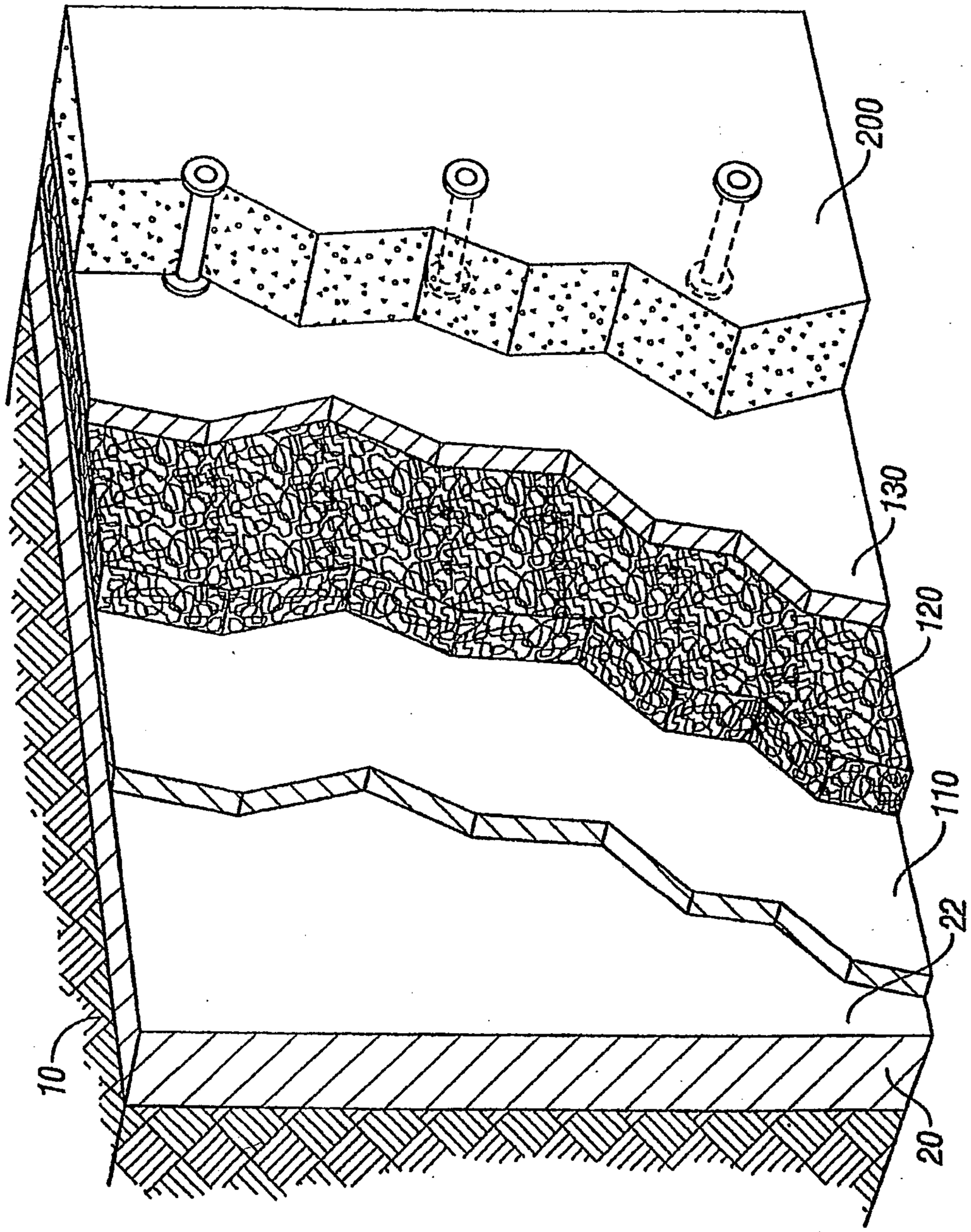

FIG. 5

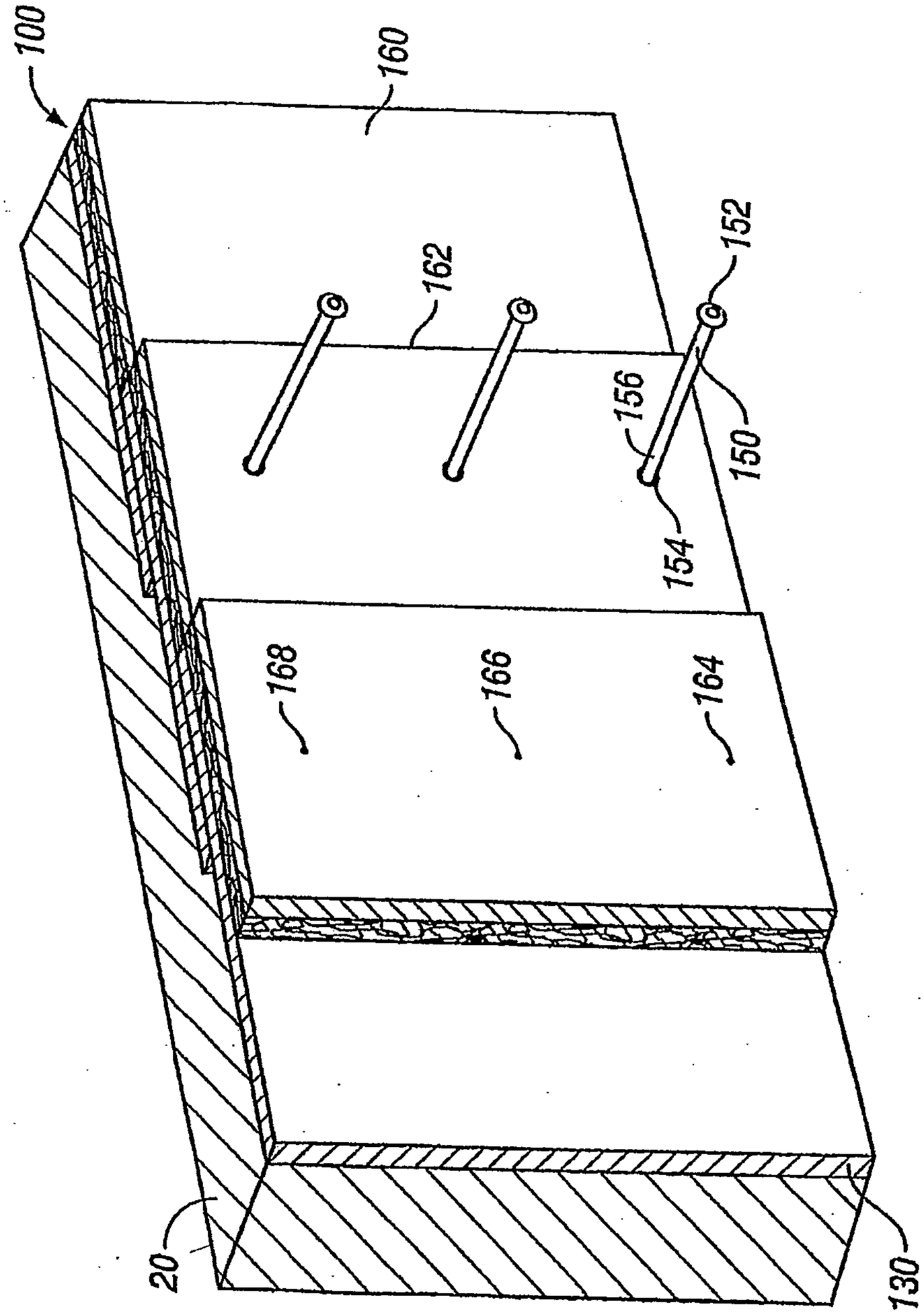

FIG. 6

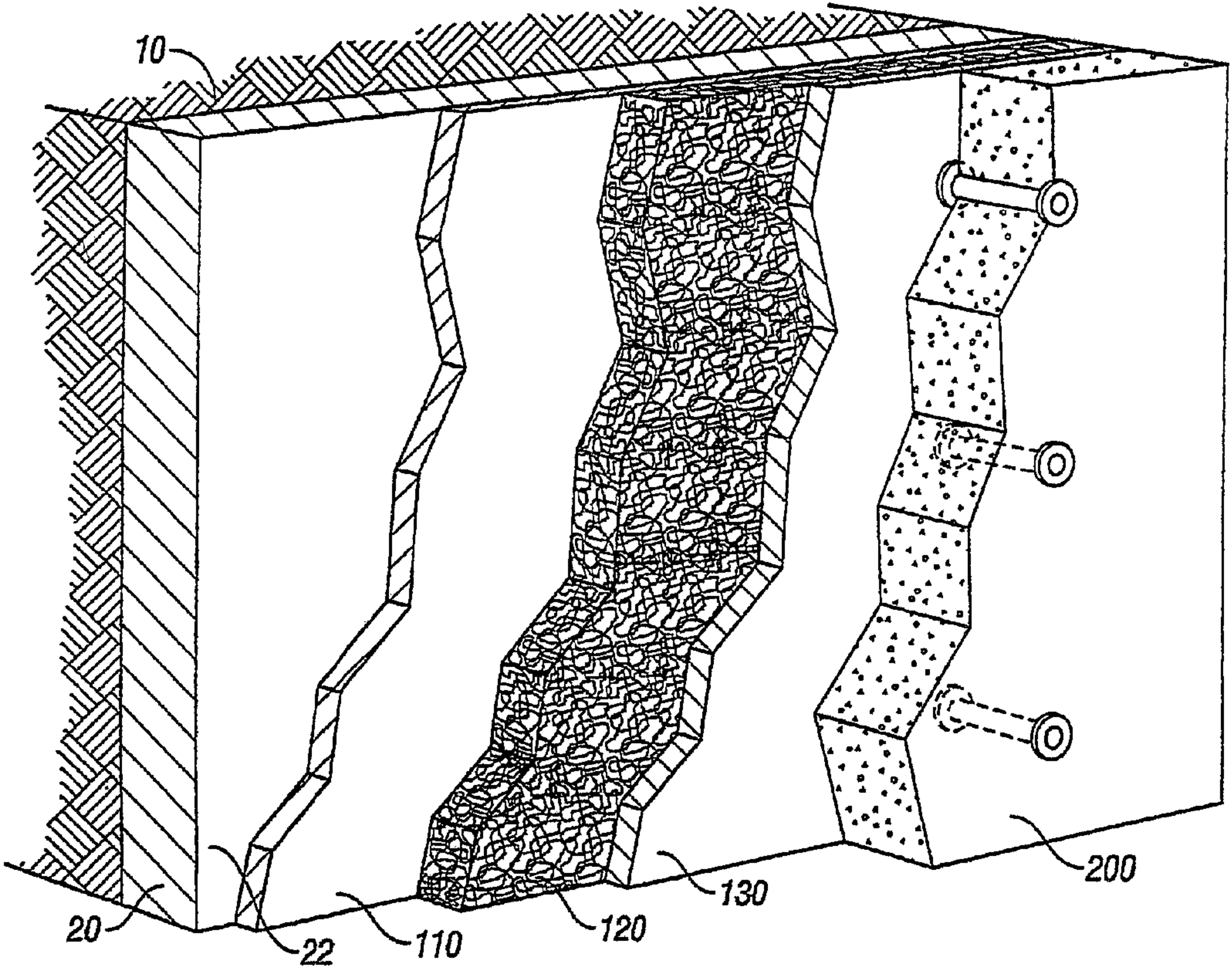
10
20
22
110
120
130
200