June 16, 1959

B. J. NIGRELLI ET AL

2,890,560

CASE FLAP OPENER

Filed Oct. 22, 1957

5 Sheets-Sheet 1

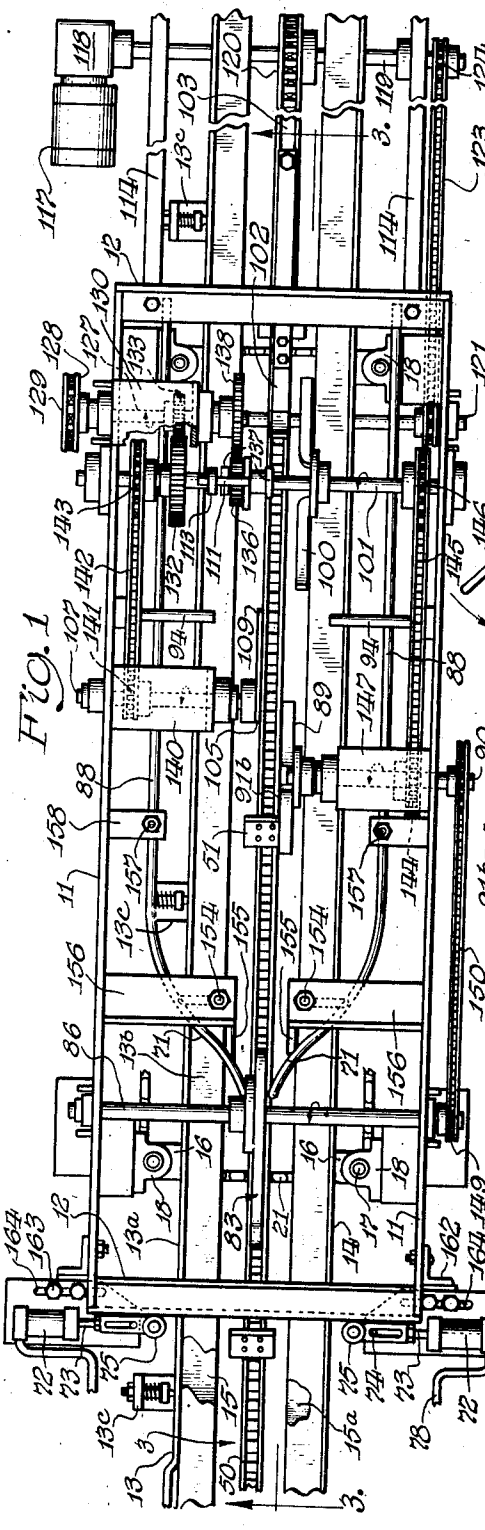

FIG. 1

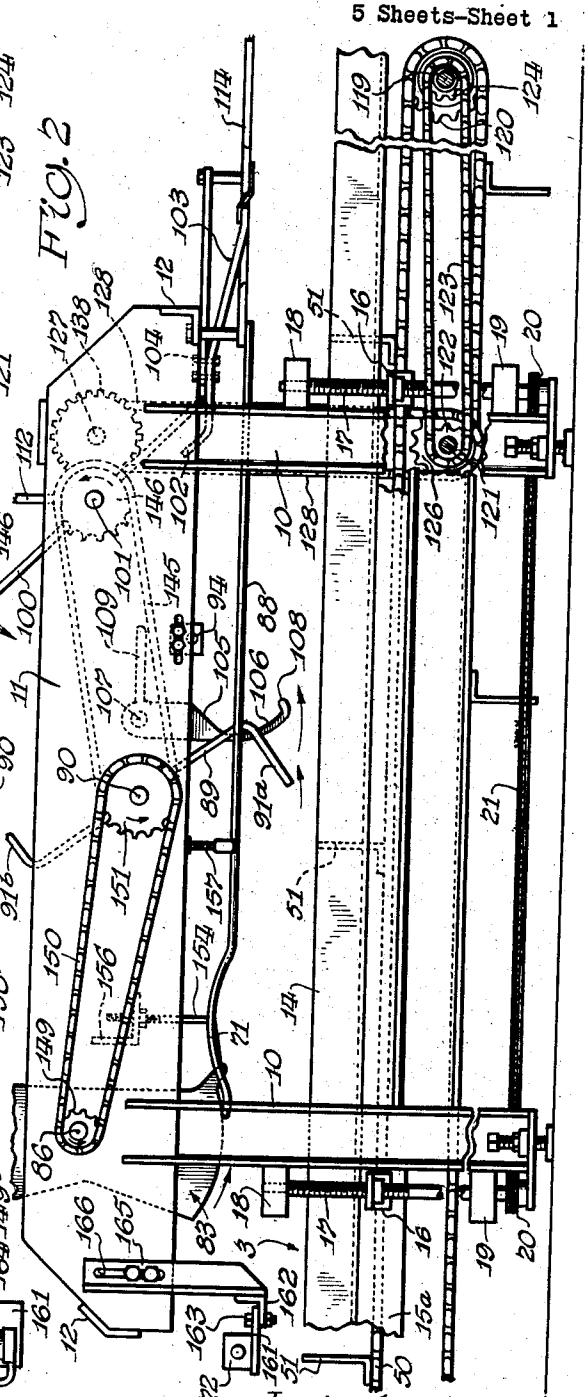

FIG. 2

Inventors
Biagio J. Nigrelli
Wendell E. Standley
Mariano V. Artiaga
By E. A. Wagoneller
Attorney

June 16, 1959 B. J. NIGRELLI ET AL 2,890,560

CASE FLAP OPENER

Filed Oct. 22, 1957

5 Sheets-Sheet 2

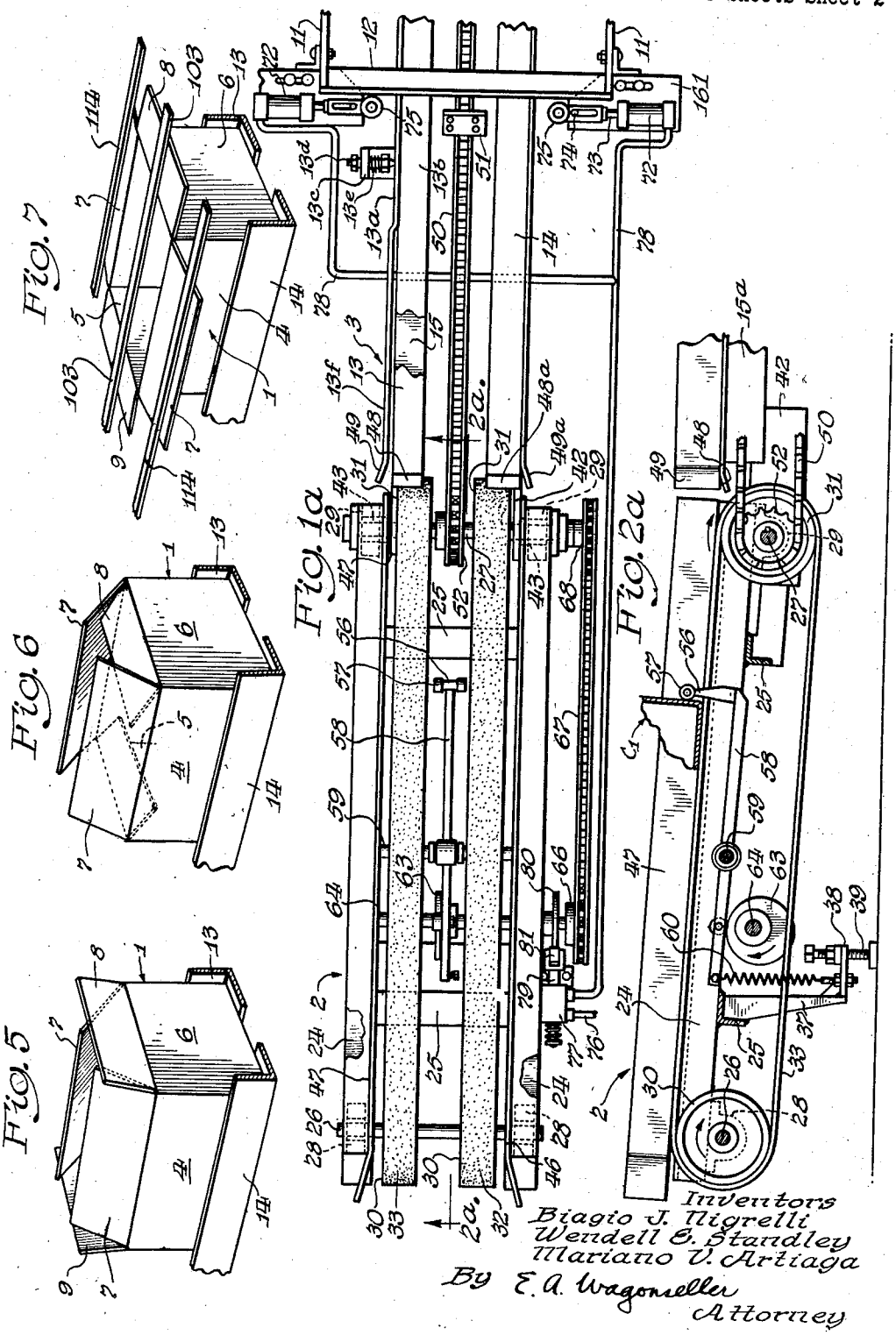

Fig. 7

Fig. 6

Fig. 5

Fig. 1a

Fig. 2a

Inventors
Biagio J. Nigrelli
Wendell C. Standley
Mariano V. Artiaga
By E. A. Wagoneller
Attorney

June 16, 1959 B. J. NIGRELLI ET AL 2,890,560

CASE FLAP OPENER

Filed Oct. 22, 1957

5 Sheets-Sheet 3

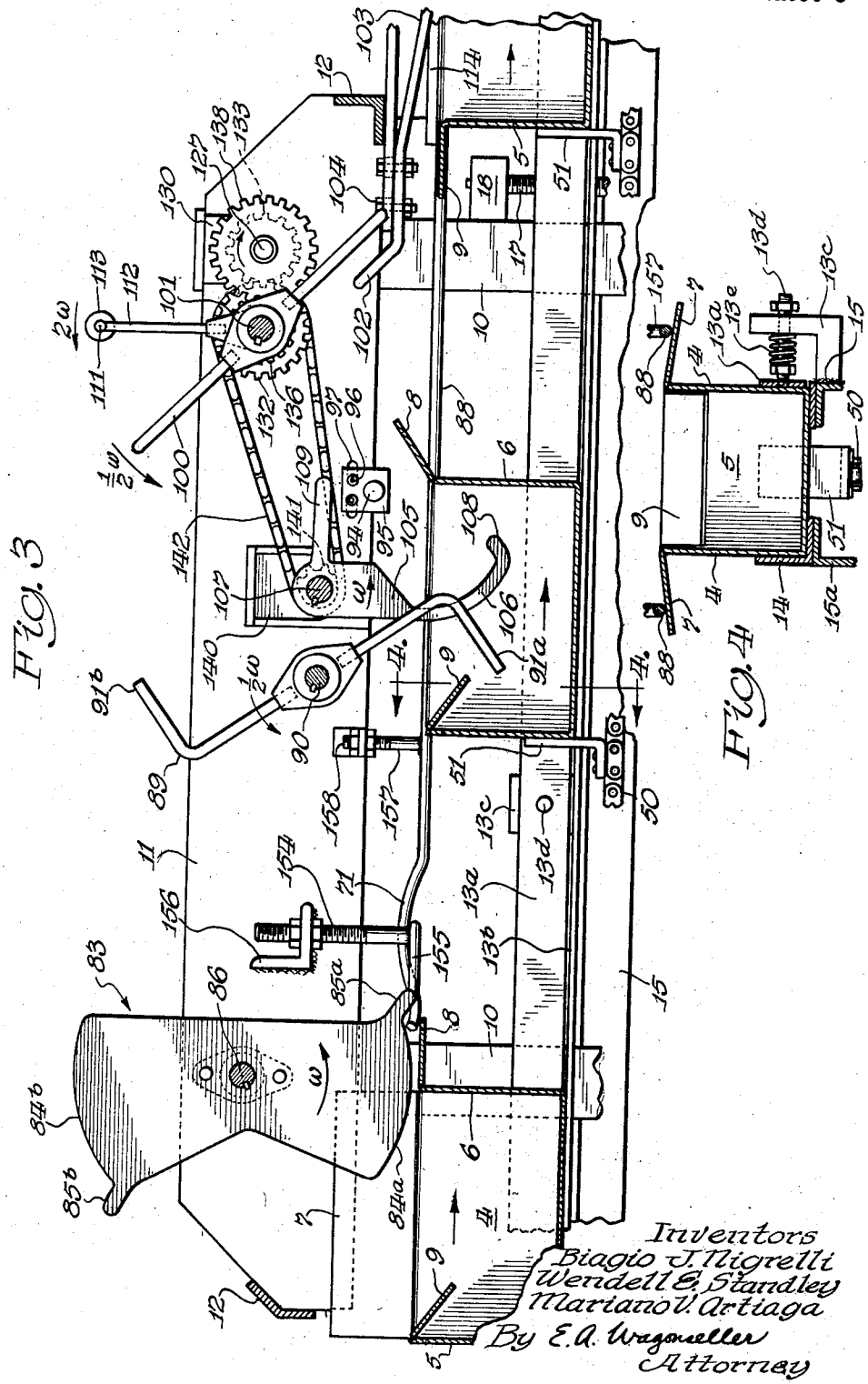

FIG. 3

FIG. 4

Inventors
Biagio J. Nigrelli
Wendell E. Standley
Mariano V. Artiaga
By E. A. Wagmueller
Attorney

June 16, 1959 B. J. NIGRELLI ET AL 2,890,560

CASE FLAP OPENER

Filed Oct. 22, 1957

5 Sheets-Sheet 4

FIG. 8

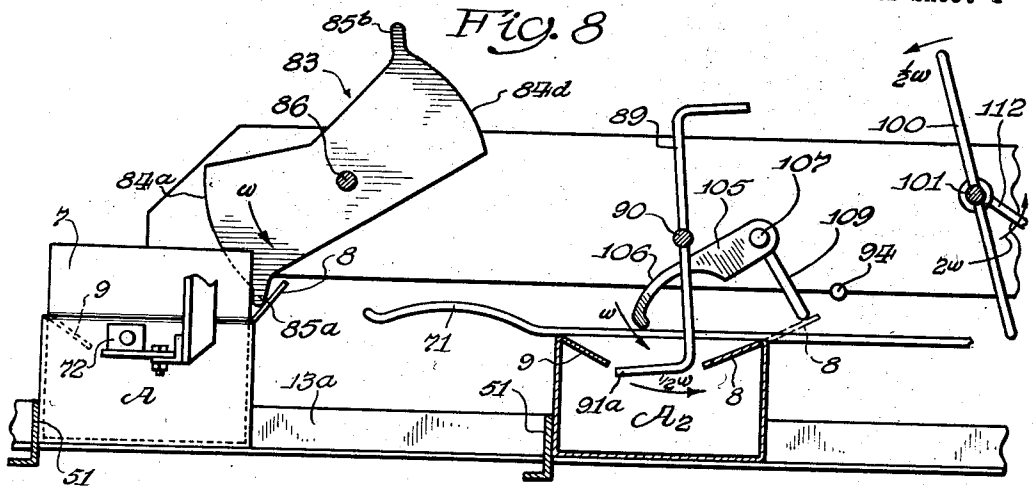

FIG. 9

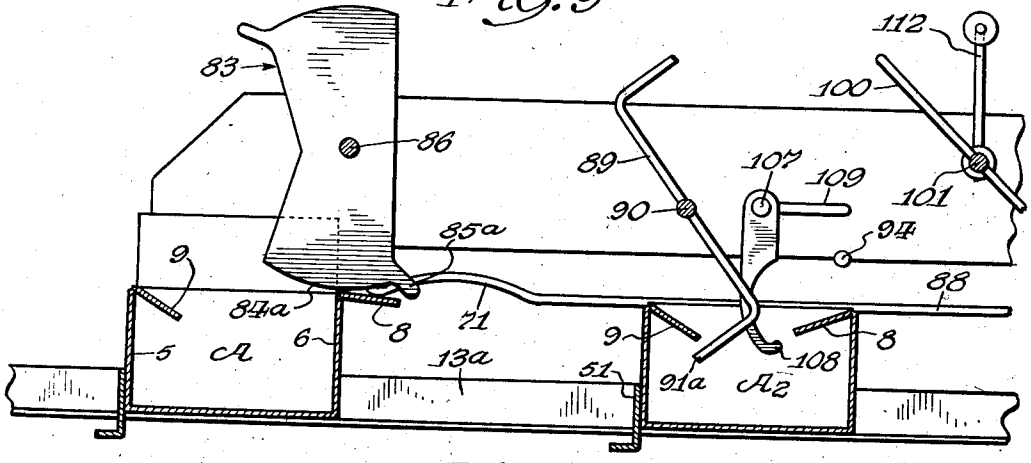

FIG. 10

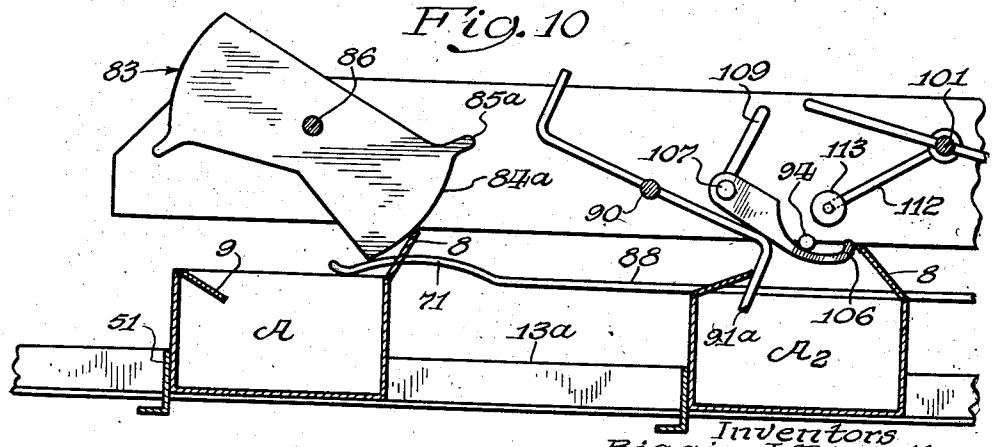

Inventors
Biagio J. Nigrelli
Wendell E. Standley
Mariano V. Artiaga
By E. A. Wagonseller
Attorney

June 16, 1959 B. J. NIGRELLI ET AL 2,890,560

CASE FLAP OPENER

Filed Oct. 22, 1957

5 Sheets-Sheet 5

Fig. 11

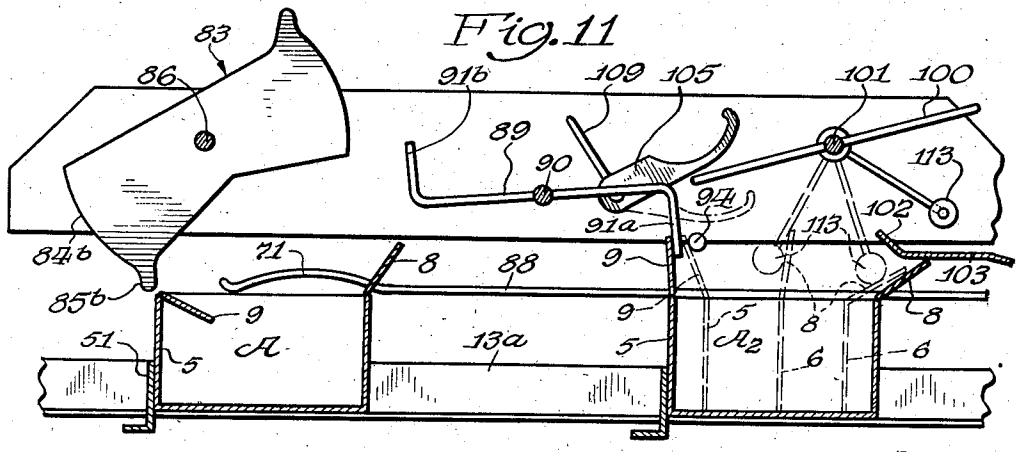

Fig. 12

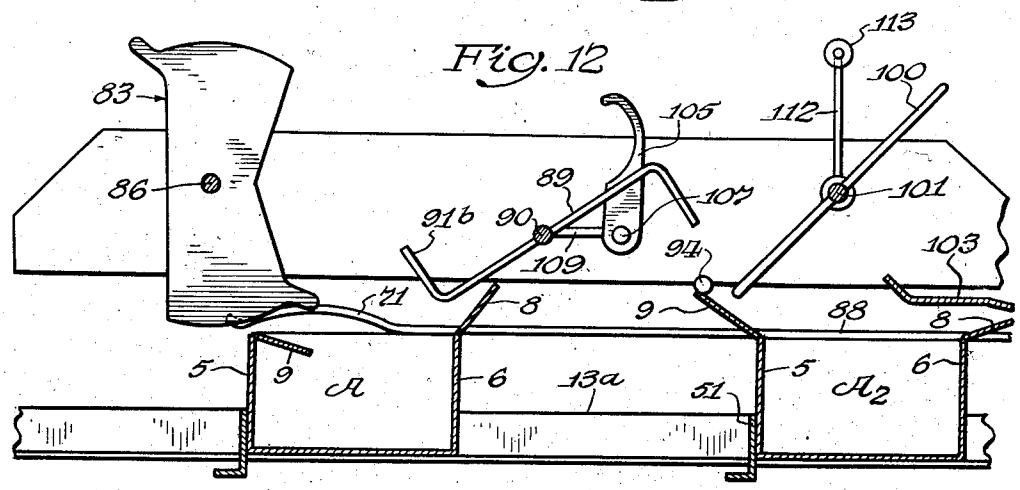

Fig. 13

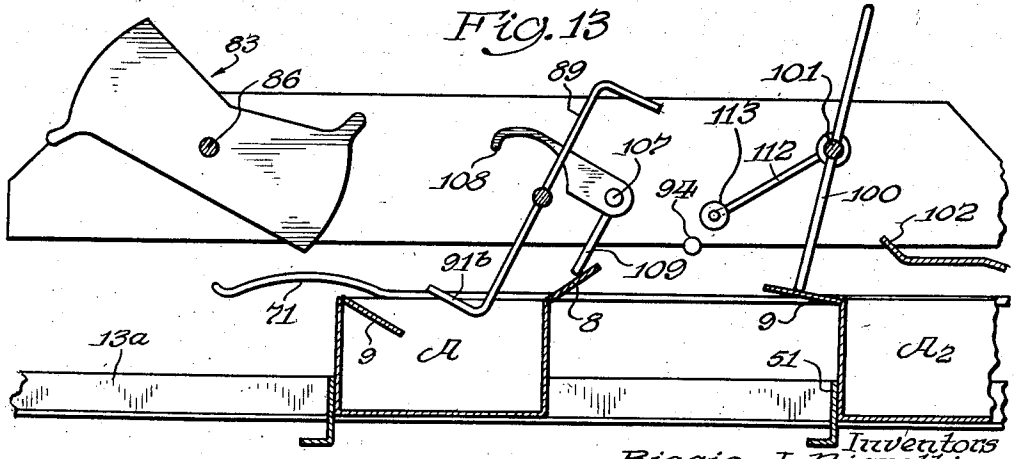

Inventors
Biagio J. Nigrelli
Wendell E. Standley
Mariano V. Artiaga
By E.a. Wagonseller Attorney

United States Patent Office 2,890,560
Patented June 16, 1959

2,890,560

CASE FLAP OPENER

Biagio J. Nigrelli, Northbrook, Wendell E. Standley, Lake Forest, and Mariano V. Artiaga, Chicago, Ill., assignors to Ralph W. Johns, Biagio J. Nigrelli, and Robert R. Johns, Chicago, Ill., a co-partnership doing business as Johns-Nigrelli-Johns

Application October 22, 1957, Serial No. 691,647

14 Claims. (Cl. 53—382)

The present invention relates to mechanism for opening the cover flaps of shipping cases or containers and more particularly relates to mechanism for raising and spreading outwardly the hinged flaps of paperboard shipping cases which have been previously emptied and the flaps of which have been temporarily folded inward.

According to a commonly accepted present day practice empty cans and bottles, immediately after manufacture, are placed in corrugated paperboard or solid fibre shipping cases of the type having hinged closure flaps on side and end walls. The closure flaps are swung to closed position but not sealed and the filled cases of empty cans or bottles are shipped in this condition to the user, such as a manufacturer and packer of foods or beverages. When it is desired to fill the cans or bottles the flaps of the cases are raised either manually or mechanically, the contents removed and the empty cases are then either placed in temporary storage or placed on a conveyor for delivery to a part of the packing plant where filled cans or bottles are ready to be loaded into the empty cases. As soon as the cases have been emptied the cover flaps are usually folded back over the top of the case approximately to their closed position. This is usually done manually with the result that the cover flaps when turned inward assume various angles. In elongated cases the short end flaps are usually folded in first and the longer side flaps are folded to overlie the end flaps. Sometimes the end flaps will assume a downwardly inclined position inside the case with the side flaps lying flat, or in approximately flat position, over the end flaps. The positions of the flaps may depend upon several factors, such as, the strength and stiffness of the paperboard, how heavily the score lines have been impressed, and the length of time the flaps have been held in closed position before the contents have been removed. If the flaps have little resistance to folding, the operator will sometimes fold the end flaps well down into the cases and they may remain as folded. If the cases are made from rather stiff paperboard the end flaps when turned in may assume an upwardly inclined position and the side flaps consequently will not be folded in to any great extent but may remain substantially vertical or may assume an upwardly and outwardly inclined position.

It is an important object of the invention to provide completely automatic mechanism for receiving empty cases of which some or all of the cover flaps have been folded inward and folding such flaps upwardly to positions which will permit the cases to be efficiently loaded with filled cans or bottles, as desired.

Another object of the invention is to provide case flap opening mechanism adapted to feed empty closed cases of the type above referred to in predetermined spacd relation to the flap opening or raising mechanism, and operating such mechanism in synchronism with the movement of the cases to lift and swing upwardly and outwardly each of the closure flaps carried by the side and end walls.

Another object of the invention is to provide a feeding conveyor having release means timed with the flap opening devices whereby cases will be delivered automatically at the desired point in the cycle of movement of the opening devices.

Another object is to provide improved means for causing preliminary upward swinging movement of the side wall flaps by flexing the side walls inwardly.

Other and more specific objects and advantages of the invention will become apparent as the description proceeds and will be set forth in the claims at the end of the specification.

In the drawings showing a preferred embodiment of the invention:

Fig. 1 is a fragmentary plan view illustrating the principal portion of the machine including means for flexing the case side walls;

Fig. 1*a* is a fragmentary plan view of the receiving conveyor, including release means, showing an end portion of the principal conveyor and also showing the same case side wall flexing means as included in Fig. 1;

Fig. 2 is a side elevation of the mechanism shown in Fig. 1;

Fig. 2*a* is a side elevation of a portion of the mechanism shown in Fig. 2;

Fig. 3 is a fragmentary cross sectional view taken along line 3—3 of Fig. 1 looking in the direction of the arrows and showing two cases being carried in spaced relation past the flap opening devices;

Fig. 4 is a cross sectional view taken along line 4—4 of Fig. 3 looking in the direction of the arrows;

Figs. 5 and 6 are perspective views of a conventional form of paperboard shipping case illustrating two possible arrangements of closure flaps, Fig. 5 showing the end closure flaps in a somewhat less common arrangement in which such flaps bear against the ends of the side wall flaps, and Fig. 6 showing a more common arrangement in which the end flaps underlie the partly infolded side wall flaps;

Fig. 7 is a fragmentary perspective view of the parts near the discharge end of the machine showing how all of the flaps are positively held in outwardly extended position as the case is conveyed;

Figs. 8 to 13, inclusive, are somewhat diagrammatic side elevational views, partly in section, showing the progression of the empty cases through the machine.

The mechanism of the present invention as herein disclosed comprises a feeding conveyor for holding two or more cases and a main conveyor for carrying the cases past the members which act upon the cover flaps. The feeding conveyor includes means to cause one case at a time to be fed to the main conveyor. The drive for the main conveyor and for the members acting upon the cover flaps is taken from a common drive means whereby the conveyor and flap opening mechanism operate in synchronism. The cases are first conveyed through a station at which the side walls are flexed inward to insure partial upward swinging of the flaps hinged on the tops of the side walls. Suitable mechanism next operates to swing downward the leading end wall flap, causing this flap to pass horizontally beneath a stationary plow means which is adapted to engage the side wall flaps and swing such flaps upward and outward. Extended portions hold the side wall flaps outwardly extended for the remainder of the distance of travel of the main conveyor.

With the side wall flaps held outwardly extended, a subsequent step is to swing upward the flap on the trailing end of the case. A movable means is provided having a part which enters the case and travels in the same direction but slower than the case travels. This part engages below the flap on the trailing end wall if such flap

is disposed in an inwardly and downwardly inclined position and swings it up to approximately a vertical position. Substantially at the same time another movable means has a part which enters the case and engages the flap carried by the leading end wall and swings the flap to an upwardly extended position. An additional movable means then engages the flap on the leading end wall and moves it forwardly and outwardly to a position enabling it to pass below a stationary hold-down means. Finally a movable means engages the upraised flap on the trailing end wall and swings it rearwardly of the case so that it will remain in rearward position when it passes beneath the hold-down means. The case thus reaches the end of the main conveyor with all flaps outwardly extended and ready for delivery to a station, not herein shown, for loading the case.

Referring more particularly to the drawings, Figs. 1 and 1*a* taken together show the machine in plan except it is to be noted that a portion of the mechanism is illustrated in both views. The cases, indicated as a whole at **1, 1**, are conveyed along two aligned conveyor sections, each indicated as a whole at **2** and **3**. Conveyor **2** may be referred to conveniently as the feeding conveyor and conveyor **3** as the main conveyor. In the broad aspects of the invention the two conveyors constitute a unitary conveying means.

The cases may be of conventional form as regularly utilized in the shipment of canned or bottled goods, and are herein represented as the ordinary tubular form of container made of corrugated or solid fibre paperboard, frequently referred to as "regular slotted containers." This form of container has sets of upper and lower closure flaps. For simplicity only the upper flaps are herein shown. The cases may be of various dimensions but for purposes of illustration they are shown somewhat elongated, comprising side walls **4, 4** and end walls **5** and **6**. The side walls carry at their upper edges hinged flaps **7, 7** which are designed to meet centrally of the top. The end walls carry flaps **8** and **9**, herein shown to be the same dimension normal to the upper wall edges as the side wall flaps.

Conveyor **3** is suitably supported within a main frame composed of vertical frame members **10, 10**, longitudinal members **11, 11**, and transverse members **12, 12**.

The cases are supported on guides **13** and **14** carried respectively on angle iron frame members **15** and **15***a* on the vertical webs of which are welded clips **16, 16** which include an interiorly threaded portion to receive threaded shafts **17, 17** having their ends journalled in fixed blocks **18, 18** and **19, 19** secured to the vertical frame members **10**. The frame members **15** and **15***a* may be raised or lowered to adapt the machine for cases of varying heights by sprockets **20** secured to the vertical shafts **17**, the sprockets being rotated in unison by means of a suitably driven sprocket chain **21**, all in a manner which is well known.

The frame for conveyor **2** comprises longitudinally extending web members **24, 24** joined by transverse members **25, 25**. Shafts **26** and **27** are journalled in brackets **28, 28** and **29, 29** depending from the longitudinal frame members **24, 24**. These shafts carry pairs of belt pulleys **30, 30** and **31, 31** over which travel belts **32** and **33**. Pulleys **31, 31** are keyed or otherwise secured to the shaft **27**.

The outer end of the frame of conveyor **2** is preferably supported on downwardly depending leg members one of which is shown at **37** having a laterally projecting flange portion **38** into which an adjusting screw **39** is threaded whereby, upon rotation of the adjusting screw, the frame or conveyor **2** may be raised or lowered. The inner end of the frame of conveyor **2** is preferably joined pivotally to an extended frame portion **42** having journals **43** through which passes shaft **27** on the conveyor **2**. Guide members **46** and **47** are preferably provided to keep the cases centered on the conveyor belts **32** and **33**. These members are suitably secured on the frame members **24, 24** and extend forwardly to positions near the ends of the guide members **13** and **14** on the conveyor **3**.

The cases are preferably conveyed along the guide members of conveyor **3** by a sprocket chain **50** having a plurality of equi-spaced flight or pusher elements **51, 51** thereon, having a spacing which is preferably substantially greater than the lengths of the cases to be handled. The belts **32** and **33** could be independently driven if desired, but it is preferred to drive the belts directly from the chain **50**. For this purpose the chain **50** is arranged to travel over a sprocket **52** keyed to shaft **27**.

While conveyor **2** has been indicated in the drawings to be of limited length it should be understood that it may be considerably longer. As an alternative, conveyor **2** may have aligned therewith a suitable auxiliary conveyor, such as a gravity type roller conveyor or a chute, which will constantly deliver additional cases to the feeding conveyor as soon as cases have left it and have been delivered to conveyor **3**. Cases may also be delivered regularly by hand to conveyor **2** to replace cases transferred to conveyor **3**.

Means are provided for holding the cases on conveyor **2** and releasing one case at a time for delivery to conveyor **3**. For this purpose an intermittently operable stop mechanism is employed which will release one case to permit the moving belts to deliver it onto the guide members **13, 14** in proper timed relation with the movement of one of the flight elements **51** on the chain **50**. The flight element will move around sprocket **52** and up between the belts **32** and **33** to contact the trailing end wall of the case and propel it past the flap opening members. As shown in Figs. 1*a* and 2*a*, a stop **56**, carrying rollers **57** at its upper end, is secured on the end of a bar **58** pivoted on a pin **59** secured transversely of the conveyor frame. A spring **60**, having one end secured to the frame and the other end secured to the end of bar **58** beyond the pivot pin **59**, urges the stop **56** upward toward its case-holding position.

In order to cause the stop to be removed from its holding position in timed relation with the movement of the flights **51**, a rotating cam element **63** is provided bearing upwardly against a roller carried by the bar **58**. The cam is secured on a shaft **64**, journalled in suitable depending brackets on the frame members **24, 24**. This shaft carries a sprocket **66** driven through chain **67**, passing over a sprocket **68** of a suitable size on the end of shaft **27**. See Fig. 1*a*. The sizes of sprockets **66** and **68** are so selected that, for the passage of each flight around sprocket **52**, the stop **56** will move through one cycle. Thus, just prior to the movement of a flight **51** into upright position in its passage around sprocket **52**, the cam **63** will have moved so that its high side causes lifting of the rear end of bar **58** to withdraw the stop **56**, allowing the cases on conveyor **2**, which are abutted end to end, to move forward. The leading case will move onto the guides **13** and **14** with its trailing end approximately above the shaft **27** in position to be engaged by a flight **51**.

Just before the next advancing case, indicated at C1 in Fig. 2*a*, reaches stop **56** the timing is such that the stop will rise up against the bottom near the trailing end of the released case. This does not stop the case in its movement for the reason that it will be propelled forward by the oncoming cases even though its front portion may be lifted momentarily out of contact with the belts **32** and **33**. The released case will be moved forward and its rear end will slip off the top of the stop **56**. This movement is facilitated by the rollers **57** at the upper end of the stop. The belts **32** and **33** have a suitable friction surface so that the belts may move beneath the cases while the cases are held stationary but the cases will be caused to move promptly once the forward case is released. After the released case slips off the stop and drops back onto the belts such case will be caused to continue to move onto the guides **13** and **14** to a point where its rear end will be only lightly engaged

by the moving belts. In general practice the movement of the cases is rapid and the cases are not subjected to any substantial amount of abrasion by the belts.

The guides **13** and **14** are so related and constructed that cases may move relatively freely into position at the receiving end of conveyor **3**. Thereafter, during their forward movement, the cases will be somewhat restrained by a degree of pressure applied against the side walls, so that they will be at all times firmly contacted by one of the conveyor flights and will not be advanced out of contact with such flights by action of the flap treating elements. The guide member **14** may be in the form of a relatively light angle iron secured to the horizontal web of the angle iron frame member **15***a*. The guide member **13** is in two separate parts and comprises a vertical portion **13***a* and a horizontal portion **13***b*. This latter portion is secured to the underlying horizontal web of angle iron frame member **15**. The vertically disposed portion **13***a* is spring tensioned and adjustable laterally toward and from the opposite guide member **14**. For this purpose brackets **13***c*, **13***c* are secured on the frame members **15**. These brackets each have an upright portion apertured to receive a threaded stud **13***d* secured to the rear face of the element **13***a*. A coil spring **13***c* surrounds the stud and bears at one end against the bracket and at the other end against a nut on the stud. A nut on the end of the stud bearing against the outside of the bracket limits the inward movement of the stud. By proper adjustment of the nuts on stud **13***d* the vertical guide portion **13***a* may be positioned to exert the desired amount of frictional resistance against the case side wall.

In order to admit the case freely to a position between the guides, the vertical part **13***a* has an outwardly offset section **13***f*, preferably of a length somewhat in excess of the longest case the machine is designed to handle. Additionally, the horizontal part **13***b* and the horizontal web of the angle iron guide **14** may be curved downward at their ends, as indicated at **48** and **48***a*; and the vertical part **13***f* and the vertical web of the guide **14** may be flared outward, as indicated at **49** and **49***a*.

After each case is engaged and moved forward along the guides **13** and **14** by a flight **51** it is desirable to make certain that the side wall flaps are in at least a slightly raised position to permit the flaps to be engaged by flap raising means, herein shown as rearwardly diverging plow bars **71**, **71**, having their ends disposed centrally of the conveyor and spaced slightly above the upper edges of the end walls of the case. While various means may be employed for this preliminary raising of the side wall flaps it is preferred to apply inward flexing pressure on the side walls which will tend to flex or distort the hinge lines between the side walls and their attached flaps and by so doing cause the flaps to swing upward. To obtain this result cylinders **72**, **72** are positioned one on each side of the path of travel of the cases. Within each cylinder is a piston connected with a piston rod **73** bearing a head **74** having a roller **75** at its end. A supply of air under pressure is fed to each cylinder through a conduit **76**, a valve **77** and a conduit **78**. The valve **77** is a usual form of three-way valve. In one position air under pressure is directed through the valve behind the pistons to cause the rollers **75** to be thrust forward to engage the side walls of a case. In a second position the port admitting air under pressure is closed, the conduit **78** is opened to the atmosphere and air under pressure is admitted to the opposite side of the piston, causing retraction of the roller **75** from the case side wall. The operating stem **79** of the valve **75** is actuated in time with the conveyor **3**. For this purpose a cam **80** is secured on shaft **64** and, as shaft **64** rotates, produces periodic movement of the valve stem to the left as viewed in Fig. 2*a*. The valve stem is spring loaded to urge it to the right so that the roller **81** on the valve stem will at all times bear upon the surface of the cam. The timing is such that, as the mid-portion of each case passes the deflecting mechanism, the pistons will be extended into contact with the case side walls and held briefly in such contact until the side wall flaps leading edges have time to reach the rotary element next to be described.

Means are provided for swinging the leading end wall flaps either forwardly beneath the plows **71**, **71**, or rearwardly to substantially the plane of the top edges of the case walls so that the leading flap will not interfere with the action of the plows in swinging the side wall flaps upward and outward. This means in the present instance comprises a rotary element **83** having two symmetrical curved surfaces **84***a*, **84***b* each terminating in a finger portion, indicated at **85***a* and **85***b* respectively. The element **83** is fixed on a shaft **86** which is driven in time with the movement of flights **51** so that the finger portions **85***a* and **85***b* will move with the case. That is, the element **83** will rotate counterclockwise as viewed in the drawings, and finger element **85***a* will pass clear of the upper edge of the leading end wall of the case. If the flap on the leading wall is extending upward and outward, as shown in Fig. 8, the finger will engage the flap and move it downward, preferably somewhat past its horizontal position. Thus, as the leading edge of the flap advances to a point even with the ends of the plows **71**, the flap will be depressed sufficiently to pass beneath the plow ends. As the plow ends are somewhat spaced apart, the fingers **85***a* and **85***b* may readily pass between the plow ends.

In the event the flap on the leading end wall is folded inward and upward, the finger **85***a* of course, will not engage the flap, and the flap will be moved down and will be positively held down momentarily by the curved surface portion **84***a* until the case has advanced to a position where the plows are in effective contact with the side wall flaps. In the event that the flap **8** on the leading end wall is one that is disposed in a downward and inward inclined position, due to the lack of resistance of the hinge, or for other reasons, the element **83** will merely pass through this part of its cycle without influencing the flap.

The flap contacting and moving elements are illustrated in Figs. 8 to 13, inclusive, as they appear in passing through a complete cycle. Beginning in Fig. 8, a case designated A is shown on the left and traveling toward the right. This case has had its side walls deflected inward to cause the side wall flaps **7**, **7** to swing partially upward. Fig. 11, 12 and 13 are taken at a location somewhat farther advanced along the machine, so case A is shown in Fig. 11 also at the extreme left and advancing toward the center of the view in Figs. 12 and 13. The cases to the right of case A, designated as A2, indicate a preceding case which has advanced through all of the positions indicated by case A. The case A2 in Fig. 8 may be considered as a continuation of the representation of case A in Fig. 13.

As case A advances from the position shown in Fig. 9 to that shown in Fig. 10, the advancing end wall flap passes out from under the ends of the plows and is permitted to swing up if the hinge connection would naturally cause this movement. It is not necessary that this leading flap be held down during its movement in this area of the operation.

The element **83** is driven to make one complete rotation while the conveyor moves the length of the space between two adjacent flights. In the latter half of its cycle of rotation the finger **85***b* and curved surface **84***b* are moving downward and forward, see Figs. 11 to 13, so that if the flap on the trailing wall is projecting inward of the case and inclined upward the finger **85***b* will depress it to cause it to pass beneath the ends of the plows. If the trailing flap is in a rearward inclined position the curved surface **84***b* will swing it down to a sub-

stantially horizontal plane and it will be so maintained as it passes beneath the ends of the plows. In the event that the flap **9** on the trailing wall is one that maintains a downward and inward inclined position, due to the lack of resistance of the hinge, or for other reasons, the element **83** will merely pass through this part of its cycle without influencing the flap.

At the position of the case A as shown in Fig. 12 rotary member **83** has completed its functions on case A and the plows have swung the side wall flaps outward. Rods **88, 88,** which are preferably formed as extended portions of the plows **71,** serve to retain the side wall flaps in an outward extended position as the case continues in its travel along the conveyor **3.**

In the event the flap **9** on the trailing end wall is directed inward, it is necessary to swing this flap out of the case to an upright position. For this purpose a constantly rotatable, approximately S-shaped, element **89** is employed fixed on a stub shaft **90.** The end portions **91***a* and **91***b* are bent at substantially a right angle to the central part of the element **89** and the length of the central portion is sufficient to bring the ends **91***a* and **91***b* down into the case, as it travels, to a position somewhat below the lower free edge of the downward and inward inclined flap. See particularly Figs. 3 and 9. In the present instance the element **89** is rotated at one-half the speed of element **83,** and each end portion **91***a* and **91***b* individually operates on successive cases. Reference first to Figs. 11, 12 and 13 and next to Figs. 8, 9 and 10 makes clear how element **89** operates. As the case advances, one end of element **89,** herein shown as **91***a*, beings to swing down in a counterclockwise movement to enter the top of case A. As shown in Fig. 13 the end portion **91***a* is just beginning to enter the case. The next view of this sequence is shown at the right in Fig. 8 in which the case, now designated A2, is approximately centrally positioned beneath the shaft **90** on which element **89** is secured. The end portion **91***a* may still dip lower into the case as shown in the next view, Fig. 9. At this location the end of the flap begins to catch up with the portion **91***a* and begins to slide therealong with the result that the flap begins to swing upward. This action continues as the portion **91***a* begins to leave the top of the case. This may be seen by comparing Figs. 10 and 11.

When the flap **9** finally passes from contact with the end portion **91***a*, occurring shortly after the position is reached that is shown in Fig. 11, it is desirable to hold this flap at least momentarily from swinging back down toward a horizontal position. For this purpose pegs **94, 94** are employed (see particularly Figs. 1 and 3) which extend inward sufficiently to be contacted by the lateral edges of the flap. The pegs are adjustably attached to the side frames **11** by means of a base part **95** to which the peg is permanently secured. This base has a threaded opening to receive screws **96** which extend through a slot **97** in the frame. By loosening the screws **96** the base may be moved a small distance forward or rearward and, by retightening the screws, the peg may be secured in the desired position.

The principal function of the pegs **94** is to hold the flap **9** from swinging forward for enough time to permit the end of a rotary element **100** to come into position whereby one of its ends can bear against the upwardly presented surface of the flap. See Fig. 12. Element **100** is secured on shaft **101** driven to rotate counterclockwise at the same speed as element **89** and the end of the element **100** will follow along with flap **9** as the case advances until the flap enters beneath the curved end portion **102** of hold-down rail **103,** adjustable longitudinally by the slot and bolt connection indicated at **104.**

At approximately the same time as the flap **9** is being lifted by the element **89,** other means become operative to lift and swing upward and outward the flap **8** on the leading end wall of the case in the event that this flap has remained in an inward and downward inclined position from the time it was placed on conveyor **2** and has therefore not been influenced by rotary element **83.** This means as herein disclosed comprises a rotaable element **105** having a curved, hook-like portion **106** terminating in a bent end **108** extending approximately in a direction tangential to the arc described by such end. The element **105** is secured on a stub shaft **107** rotatable counterclockwise at the same speed as element **83.**

The movement of element **105** is so timed with the conveyor that its end **108** will reach a maximum distance into the case when the case approaches a central position beneath the shaft **107.** The curved end portion **106** is preferably of a length to extend a substantial distance into the case, so that the bent end portion **108** will engage beneath the leading end wall flap **8.** In Fig. 8 the curved portion **106** is to be seen moving down toward the top of the case. In Fig. 9 the end **108** of portion **106** is approaching the edge of the flap and in Fig. 10 the end **108** has contacted the flap and has raised it. This completes the function of the curved end **106** and the flap is now in a position to be acted upon by other means presently to be described.

In the event the flap **8** on the leading end wall has been swung forward by element **83** and has remained in such position, as shown in Figs. 8, 9 and 10, the curved end **106** will not influence the flap and therefore other means are provided to insure that the advancing edge of the flap will pass below the pegs **94, 94.** This means comprises an arm **109** extending from rotatable element **105** in a direction approximately at a right angle to the part from which the curved portion **106** extends. As shown in Fig. 13, the arm **109** engages the flap **8** and moves it somewhat forward and downward as shown at the right of Fig. 8, wherein the alternate position of flap **8** is shown in broken lines. The arm **109** stays in contact with the flap until its end has been brought beneath the pegs **94, 94.** It is thus apparent that the flap **8,** whether folded within the case or swung forwardly, will be brought to upright position by the rotary element **105,** either by the curved end portion **106** or by the arm **109.** Thus, by the time the forward end wall passes the pegs **94,** the flap **8** will be approximately upright and beyond the pegs.

When the flap **8** has thus been brought to raised position the next step is to move it to an approximately horizontal, outwardly extended position. For this purpose an arm **112,** having a transversely extending stud portion **111,** carrying a disc **113** near its outer end, is rotatable in a counterclockwise direction about shaft **101** and independently driven. The speed at which arm **112** is driven is preferably such that it will rotate twice during the passage of each flight **51** and by so doing, will contact the forward flap **8** of each passing case. As shown in Fig. 10 the disc **113** carried by arm **112** is almost in position to contact the flap **8.** In Fig. 11 the flap **8** is shown in full line position as having been contacted by the disc **113** and directed forwardly so that the free edge of the flap slides under the curved end **102** of the hold-down rail **103.** Two intermediate positions of the case are indicated by showing in broken lines only the leading wall **6** and the flap **8.**

After the leading wall flap **8** has been swung down and slid below the hold-down rail **103,** the case continues to move forward and the element **100** will contact the trailing wall flap **9,** as previously explained, and this flap will be swung rearward prior to its passage below the rail **103.**

Near the discharge end of conveyor **3** an outer pair of hold-down rails **114, 114** may be employed which are in effect continuations of the rods **88.**

The driving means for the various flap contacting elements will now be described. A motor **117** is connected through a gear box **118** to rotate a main drive shaft **119** journalled in suitable bearings on the machine

frame. Keyed to the shaft is a sprocket **120** around which passes the conveyor chain **50** of conveyor **3**. At the other end of conveyor **3** the chain passes around sprocket **52** on shaft **27**, as previously explained. A shaft **121** is journalled near the lower ends of the upright frame members **10, 10**, and is driven by a sprocket **122** thereon through a chain **123** passing over a sprocket **124** on the shaft **119**. At the other end of shaft **121** is secured a sprocket **126** which drives a stub shaft **127** through a chain **128** passing around sprocket **129** secured to the end of the stub shaft. The stub shaft **127** is journalled in the side frame **11** and in a supplemental bracket **130** secured at the upper part of the machine. See Figs. 1 and 2.

The shaft **101** to which rotary element **100** is secured extends across the machine and has its ends journalled in the side frame members **11, 11**. This shaft **100** carries a spur gear **132** which is keyed thereon and which meshes with a gear **133** keyed on stub shaft **127**. The gear ratio is such that shaft **101** will be caused to make one-half a revolution while the conveyor chain travels a distance equal to the spacing between flights.

In order to rotate the arm **112**, bearing the disc **113**, the arm is secured to a pinion **136** which is mounted on shaft **101** to rotate freely and is held in place by collars **137, 137** fixed on the shaft **101**. The pinion **136** meshes with a gear **138** keyed on stub shaft **127**. As shown in Fig. 1, the disc **113** as previously described is carried on the stud portion **111** extending at a right angle to the main part of the arm, and the arm is sufficiently long whereby the stud and disc **113** may pass around the gear **138** on the end of stub shaft **127** without interference. The gear sizes are selected so that the arm **112** will make two revolutions during the time the conveyor chain moves one flight spacing.

For the purpose of driving the hook-like element **105** secured to shaft **107**, the shaft has a sprocket **141** thereon which is driven by a chain **142** passing around sprocket **143** secured on shaft **101**. See Fig. 1. The sizes of the sprockets are selected so that element **105** will make one revolution while the conveyor chain moves one flight spacing. The stub shaft **107** is journalled at one end in frame **11** and intermediate its ends in a supplemental bracket **140** carried on the frame **11**.

For the purpose of driving the S-shaped element **89** on the stub shaft **90** a sprocket **144** is secured on this shaft. This sprocket is driven by a chain **145** which passes around a sprocket **146** fixed on shaft **101**. The sizes of the sprockets are selected so that element **89** will make one-half a revolution while the conveyor chain moves one flight spacing. The stub shaft **90** is journalled in frame member **11** and in a bracket **147** carried thereon.

In order to drive the rotary element **83** fixed on shaft **86** this shaft has a sprocket **149** keyed thereon, driven by a chain **150** passing around a sprocket **151** on shaft **90**. The sizes of the sprockets are selected so that the rotary element **83** will make one revolution while the conveyor chain moves one flight spacing.

Means are provided for adjusting the plows **71** and hold-down rails **88**. For this purpose threaded adjusting rods **154** are secured at their lower ends to short, bent bar sections **155** secured to the rear sides of the plows **71** by welding. The vertical threaded end of each screw is held in the horizontal web of a suitable angle bracket **156** by means of nuts which can be tightened against the horizontal web of the bracket. A somewhat similar arrangement is used for the holddown rails **88**. This comprises a threaded stud or rod **157** welded at its lower end to each rail **88** and having its other end adjustably secured in a bracket **158**. In practice the plows **71** and hold-down rails **88** may be formed of metal rods which have a degree of flexibility so that if desired each plow may be formed integral with its companion hold-down rail.

The piston-cylinder means for flexing the case side walls may be adjusted, both vertically and in and out transversely to the travel of the cases. For this adjustment each cylinder may be secured on a plate **161** slidable in and out on the horizontal portion of an angle iron bracket **162** provided with a pair of bolts **163** arranged to extend through a slot **164** in the plate. The bracket **162** has a vertical portion **165** including a web contacting flat against the frame member **11**. This vertical portion is slotted at **166** so that it may be held in various vertically adjusted positions by bolts held in the frame member **11** and extending through the slots.

To summarize the operation of the mechanism—the motor is started to operate the conveyors and flap treating devices. Empty paperboard cases, having their flaps either fully or partially folded over, as typified in Figs. 5 and 6, are then delivered to conveyor **2**, either manually or by a suitable conveyor. The empty cases are propelled in endwise abutted relation along conveyor **2** on the constantly moving belts **32** and **33** until the leading case reaches stop **56**. As soon as one of the flights **51** on the chain **50** of conveyor **3** approaches the sprocket **52** the stop will be withdrawn by the action of the continually rotating cam **63** and the belts will propel the leading case onto the guides **15** ready to be propelled forward along the guides by such flight **51**.

When the case propelled by flight **51** travels a short distance along the guides the side walls are deflected inward by the action of the rollers **75, 75** on the pistons **73, 73**, controlled by the cam actuated valve **77**. This deflection of the side walls causes inward bending of the flap hinge lines with the result that the flaps, if folded over the top of the case, will be caused to swing upward. Pressure is maintained on the side walls through only a brief period but sufficiently long so that the forward corner portions of the flaps will be brought into positions where they can engage the element **83**. Thus, if there should be a tendency for the flaps to reassume a flat position over the case, they will be held up by their engagement against the rotary element.

The rotary element **83** rotates once in a counterclockwise direction, as viewed in the drawings, while the conveyor chain moves the distance of one flight spacing. By so doing, both the leading and trailing end wall flaps may be influenced by one of the two fingers **85***a* or **85***b*, which serve to fold the flap toward a horizontal plane if the flap is directed forward and will cause it to slide beneath the ends of plows **71, 71**. If either end flap is directed rearward and not engaged by a finger as it moves past the end of the case one of the curved surfaces **84***a* or **84***b* will fold the flap further rearward to approximately a horizontal position.

The side wall flaps in passing the plows **71** are caused to assume an outward extended position and will be so held by the rails **88** during further travel of the case along conveyor **3**.

The case next passes beneath the S-shaped element **89** rotating counterclockwise one revolution while the conveyor chain travels the distance of two flight spacings so that the opposite ends will enter successive cases. If the trailing end wall flap is directed inward and downward the end of element **89** will be engaged by the edge of the flap and the flap will be swung to an upright position as shown in Figs. 9, 10 and 11.

At approximately the same time the S-shaped element acts upon the trailing wall flap, the hook shaped element **105** will act upon the leading wall flap, assuming such flap is directed inward. This element turns counterclockwise one revolution while the conveyor chain travels the distance of one flight spacing. The action of element **105** is best indicated in Figs. 8, 9 and 10.

In the event the flap on the leading wall is directed forwardly and outwardly, as shown in the alternate broken line position in Fig. 8, the finger **109** on element

105 will engage the flap, as shown in Figs. 13 and 8, and will swing it forward, causing it to pass to the right of the pegs 94, 94 as viewed in Fig. 8.

When the flap on the trailing wall has been released by the S-shaped member 89 it will pass beneath the pegs 94, 94 and, prior to passing from contact with the pegs, it will be engaged by one end of element 100. This element like element 89 makes a full revolution while the conveyor chain moves the distance of two flight spacings.

After the hook shaped portion 106 of element 105 passes out of contact with the leading wall flap leaving the flap projecting upward, it is almost immediately engaged by the disc 113 on arm 112 and swung forward and downward so that the outer free end of the flap will pass beneath the curved end of holddown rail 103. See Figs. 10 and 11. The arm 112 rotates twice during the time the conveyor chain travels one flight spacing.

The flap on the trailing wall, having been brought to upright position, will be swung down to horizontal position by contact with element 100. Then, after it passes beyond the influence of element 100, it will move in beneath the end 102 of hold-down rail 103. At the end of conveyor 3 all of the flaps of the case have been brought to an outward extended position and are so held by the side and central hold-down rails, as indicated in Fig. 7. At this point the case is ready to be delivered to additional mechanism designed to load the case with its contents.

From the foregoing it is apparent that there has been provided a combination of operating devices adapted to receive and convey empty cases which have had their flaps temporarily turned inward. The conveyor for retention of a supply of empty cases is designed to feed one case at a time in coordination with the conveyor designed to carry the cases past flap treating devices which operate in such a manner and such sequence as to lift up and swing outward all four hinged closure flaps of a paperboard case of the type known as "regular slotted containers," within wide limits of flap positioning. By first applying inward pressure to the case side walls the side wall flaps are caused to swing up and immediately thereafter the leading end wall flap is either swung forward, if it happens to be outside the side flaps, as shown in Fig. 5; or swung rearward and downward if this flap is inside the side flaps, as shown in Fig. 6. By clearing the area at the upper end of the leading end wall the plows for the side wall flaps can perform their functions without interference which might otherwise cause the case to be torn and rendered useless.

Due to the employment of stub shafts for the elements 89 and 105, and by mounting the element 112 for movement independently about the shaft 101 on which element 100 is fixed to rotate with the shaft 101 there is obtained a very important degree of compactness of the mechanism which minimizes the length of the machine.

By the provision of means for vertically adjusting the guides 15, 15 of conveyor 3 and the adjusting means for the piston-cylinder mechanism for side wall deflection the mechanism is well adapted to handle cases of varying heights. By the provision of the adjustable connection indicated at 104 the curved end 102 may be moved forward or rearward to accommodate end wall flaps of varying lengths and assure that the edges of the flaps will be brought under the curved end 102 at the proper time in the movement of the case.

While the present description sets forth a preferred embodiment of the invention, numerous changes may be made in the construction without departing from the spirit of the invention, and it is therefore desired that the present embodiment be considered in all respects as illustrative and not restrictive, reference being had to the appended claims rather than to the foregoing description to indicate the scope of the invention.

What is claimed is:

1. Flap opening mechanism for elongated, rectangular cases of the type having side and end walls with closure flaps hinged to the top edge of each wall, said mechanism comprising a conveyor for advancing the cases in upright position and in a direction aligned with their longitudinal axes, means for flexing the case side walls inward to cause the side wall flaps of each case to swing upward from flat position over the case to an upward and inward inclined position, stationary plow means disposed centrally over the conveyor at a height closely spaced above the upper edges of the case walls and adapted to engage the inner advancing edges of each of the upward and inward inclined side wall flaps and swing them outward as the case is advanced, movable means located over the conveyor adapted to engage and swing outward and downward the end wall flap on the advancing end of the case to cause it to pass beneath the plow means, retaining members extending beyond the plow means, located above the conveyor and laterally of the side walls of the case to retain the side wall flaps in outwardly extended position as the case is advanced, said retaining members being separated laterally a sufficient distance to permit the leading end wall flap to swing upwardly after the flap has advanced beyond the plow means, movable means adapted to enter the open case and to engage the end flap on the trailing edge of the case and swing such flap upward in the event such end flap is folded inwardly, such means completing its function when such flap has been swung approximately to fully raised position, stationary hold-down means for the leading and trailing end wall flaps, movable means for engaging and swinging the leading end wall flap forward and downward below such hold-down means, and additional movable means for engaging and swinging the trailing end wall flap rearward prior to its contact with the hold-down means.

2. Flap opening mechanism for rectangular cases made of foldable material, such as paperboard, and of the type provided with closure flaps hinged to the top edges of each wall, said mechanism comprising a conveyor for advancing the cases with their closure flaps folded inward in at least partial overlapping relation, plow means located in spaced relation to the conveyor in position to engage and swing outward the closure flaps on the case walls extending parallel with the conveyor travel when such flaps are in a partially raised position, means ahead of the plow means for causing the last mentioned flaps to be partially raised, and means movable in the same direction as the conveyor for swinging the flap on the leading case wall to substantially the plane of the top edges of the walls to cause it to pass clear of the plow means, whereby the plow means can act upon the two side closure flaps without interference with the leading wall closure flap.

3. Flap opening mechanism for four-wall, rectangular cases made of foldable material, such as paperboard, and of the type provided with closure flaps hinged to the top edges of each wall, said mechanism comprising a conveyor for advancing the cases in an upright position with their closure flaps folded inward in at least partial overlapping relation, plow means located over the conveyor in position to engage the side closure flaps on the case walls extending parallel with the conveyor travel when such flaps are in a partially raised position, means ahead of the plow means for causing the last mentioned flaps to be partially raised, and means movable in the same direction as the conveyor for swinging to horizontal position the flap on the leading case wall to cause it to pass beneath the plow means, whereby the plow means can act upon the two side closure flaps without interference with the leading wall closure flap, said last mentioned means including surface portions for contacting and retaining the side closure flaps in their partially raised position until the case advances sufficiently for the plow means to engage beneath the advancing edge of said flaps.

4. Flap opening mechanism for four-wall, rectangular cases made of foldable material, such as paperboard, and

of the type provided with closure flaps hinged to the top edges of each wall, said mechanism comprising a conveyor for advancing a case in upright position with the closure flap on the leading wall extending upward and with the flaps on the side walls inclined upward and inward, plow means disposed centrally over the conveyor with the front end of the plow means located in a position closely spaced above the top edges of the case walls, and means in advance of the plow means and operable in timed relation to the conveyor for contacting the flap on the leading wall at a predetermined location on the conveyor and for moving such flap downward to a position at least no higher than the top edge of the leading wall, whereby such flap will pass below the front end of the plow means, said plow means having outward diverging portions extending to lines laterally outside the vertical planes of the side walls, whereby, when the case is advanced the plow means will engage beneath the edges of the side wall flaps and swing them upward and outward of the case.

5. In flap opening mechanism for empty, four-wall, rectangular cases made of foldable material, such as paperboard, and of the type provided with closure flaps hinged to the upper edges of each of the walls, said mechanism comprising in combination, a conveyor for advancing the cases with their closure flaps folded inward in at least partial overlapping relation, means for driving the conveyor, means operative during travel of the cases on the conveyor for raising and swinging outward the flaps on the case walls that are hinged in alignment with the travel of the cases, a rotatable arm mounted on pivot means spaced from the tops of cases carried by the conveyor and rotatable in the direction of travel of the conveyor, said arm having an angularly disposed end portion projecting in a direction rearwardly of the travel of the conveyor and adapted to enter a substantial distance into the top portion of the case, means for rotating the arm in time with the conveyor to cause the extremity of the arm and the rearwardly projecting portion to enter a case, whereby the rearwardly projecting portion can receive contact by the free edge portion of a downwardly inclined flap on the trailing case wall and cause lifting of the flap as the case advances.

6. In flap raising mechanism for empty, four-wall, rectangular cases, such as paperboard, and of the type provided with closure flaps on at least two opposed walls, said mechanism comprising in combination a conveyor for advancing a case with the closure flaps carried on the leading and trailing walls and the flap on the trailing wall being folded inward of the case at a downward inclination, means for driving the conveyor, a rotatable arm mounted on pivot means spaced from the tops of cases carried by the conveyor and rotatable in the direction of travel of the conveyor, said arm having an angularly disposed end portion projecting in a direction rearwardly of the conveyor travel and adapted to enter a substantial distance within the case, means for rotating the arm in time with the conveyor to cause the extremity of the arm and the rearwardly projecting portion to enter a case, whereby the rearwardly projecting portion can receive contact of the free edge portion of a downwardly inclined flap on the trailing wall of a case and cause lifting of the flap as the case advances.

7. In flap raising mechanism for empty, four-wall, rectangular cases made of foldable material, such as paperboard, and of the type provided with closure flaps on at least two opposed walls, said mechanism comprising in combination, a conveyor for advancing a case with the closure flaps carried on the leading and trailing walls and the flap on the leading wall being folded inward of the case at a downward inclination, means for driving the conveyor, a rotatable arm having a hook-shaped outer end portion mounted on pivot means spaced from the open tops of cases carried by the conveyor and rotatable in the direction of travel of the conveyor, the hook portion on the arm projecting forwardly of the conveyor travel and adapted to enter a substantial distance within the case, means for rotating the arm in time with the conveyor to cause the extremity of the arm and its forwardly projecting hook portion to enter a case during its forward movement and contact beneath the lower free edge of an inwardly and downwardly inclined flap on the leading wall of a case and cause lifting of the flap as the case advances.

8. In flap raising mechanism for empty, four-wall, rectangular cases of the type provided with closure flaps hingedly carried on at least two opposed walls, said mechanism comprising in combination a conveyor for advancing a case with its closure flaps on the leading and trailing walls inclined downward inside the case, means for driving the conveyor, a pair of rotary arms mounted on parallel axes extending laterally of the conveyor and spaced from the tops of the cases carried thereby, each rotary arm having a part extending longitudinally of the conveyor, in opposite directions and adapted to enter a substantial distance inside a case on the conveyor, and means for rotating said arms in time with the conveyor travel, the extending parts on said arms being adapted respectively to engage the flaps on the leading and trailing walls of a case during rotation of the arms while the case is advancing on the conveyor and swing said flaps to upwardly inclined positions.

9. Flap raising mechanism for four-wall, rectangular cases made of foldable material, such as paperboard, and of the type provided with closure flaps hinged to the top edges of at least two opposite walls, a continuously operable feeding conveyor for advancing a case in upright position with the walls that carry the flaps extending in alignment with the container travel, a movable stop associated with the conveyor, a main conveyor for receiving cases from the feeding conveyor, said main conveyor having spaced flight elements adapted to engage and propel cases received from the feeding conveyor, means timed with the travel of the main conveyor for releasing the stop and causing delivery of a case to the main conveyor and for subsequently causing the stop to move to case-holding position to stop the next advancing case, and means located beyond said stop and timed with the main conveyor for causing initial swinging of the side wall flaps to inclined position over the case.

10. Flap raising mechanism for four-wall, rectangular cases made of foldable material, such as paperboard, and of the type provided with closure flaps hinged to the top edges of at least two opposite walls, a continuously operable feeding conveyor for advancing a case in upright position with the walls that carry the flaps extending in alignment with the container travel, a movable stop associated with the conveyor, a main conveyor for receiving cases from the feeding conveyor, said main conveyor having spaced flight elements adapted to engage and propel cases received from the feeding conveyor, means timed with the travel of the main conveyor for releasing the stop and causing delivery of a case to the main conveyor and for subsequently causing the stop to move to case-holding position to stop the next advancing case, means located beyond said stop and timed with the main conveyor for causing initial upward swinging of the side wall flaps to inclined position over the case, and common control means for said last mentioned means and the stop actuating means.

11. Flap raising mechanism for four-wall, rectangular cases made of foldable material, such as paperboard, and of the type provided with closure flaps hinged to the top edges of its walls, a main conveyor for conveying a case in upright position, equi-spaced flights on the conveyor, each adapted to propel a case, means for driving the conveyor, flap raising means associated with the conveyor, means for operating the flap raising means in time with the flight movement, and a feeding conveyor driven from

the main conveyor and operable to deliver a case to the main conveyor in advance of each flight.

12. Flap raising mechanism for four-wall, rectangular cases made of foldable paperboard, and of the type provided with closure flaps hinged to the top edges of its walls, a main conveyor disposed horizontally for carrying a case in upright position, equi-spaced flights on the conveyor each adapted to propel a case, means for continuously driving the conveyor, means operable in time with such conveyor for swinging upward at least certain flaps from inward extended positions over the case, a feeding conveyor aligned with the main conveyor, means for continuously driving the feeding conveyor, a movable stop near the discharge end of the feeding conveyor, and means timed with the travel of the main conveyor for moving the stop periodically from operative to inoperative position to release a case for delivery to the main conveyor in position to be engaged by a flight thereon.

13. A conveyor combination comprising a main conveyor adapted to carry rectangular cases in upright position, said conveyor including guides for the cases and a conveyor chain having spaced flights for propelling cases along the guides, a feeding conveyor having guides aligned with the main conveyor guides and having a belt for propelling cases along the guides in abutted relation, a movable stop for the feeding conveyor, means for continuously driving the main conveyor and the feeding conveyor, and means timed with the travel of the flights on the main conveyor for moving the stop to inoperative position to deliver one case to the main conveyor guides prior to the movement of a flight into position to propel the case on the main conveyor, said stop moving means causing the return of the stop to operative position prior to the passage of the trailing end portion of the released case past the stop, whereby the stop is in position to halt the next advancing case.

14. A conveyor combination comprising a horizontally disposed main conveyor adapted to carry cases in upright position, said main conveyor including laterally spaced guides for the cases and an endless conveyor chain arranged to travel between the guides, a sprocket for the conveyor chain rotatable on a horizontal axis, a feeding conveyor including guides aligned with the main conveyor guides and a pair of spaced endless belts on which cases may be propelled in abutted relation toward the main conveyor, said spaced belts being arranged between the guides of the feeding conveyor and passing individually over spaced pulleys rotatable on a common horizontal axis, spaced flights on the main conveyor chain adapted to engage against the trailing wall of a case to propel it, said flights being sufficiently narrow to travel up between the belts for a distance ahead of the discharge ends of the belts, means for continuously driving the main conveyor and the feeding conveyor, a movable stop associated with the feeding conveyor, means timed with the travel of the flights on the main conveyor for moving the stop to inoperative position to deliver one case to the main conveyor guides prior to the movement of a flight into position to propel the case along the main conveyor, said stop moving means causing the return of the stop to operative position prior to the passage of the trailing end portion of the released case past the stop, whereby the stop momentarily displaces the case at its trailing end and moves into position to halt the next advancing case.

References Cited in the file of this patent

UNITED STATES PATENTS

2,620,961	Wahl et al.	Dec. 9, 1952
2,656,060	Fischer et al.	Oct. 20, 1953
2,684,799	Holstein	July 27, 1954
2,685,975	Bruce	Aug. 10, 1954