Jan. 1, 1924 1,479,739

J. F. RADTKE

LAMP HOLDER

Filed March 2, 1922

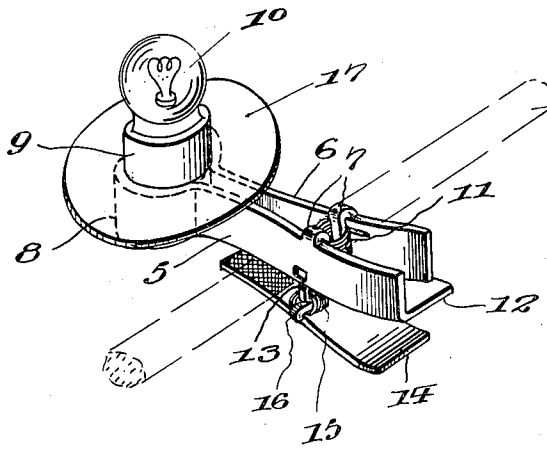

Fig. 1.

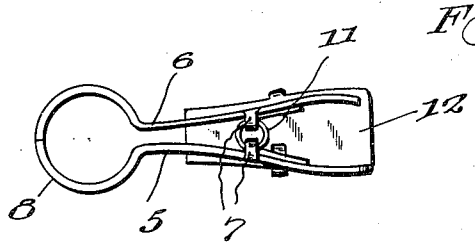

Fig. 2.

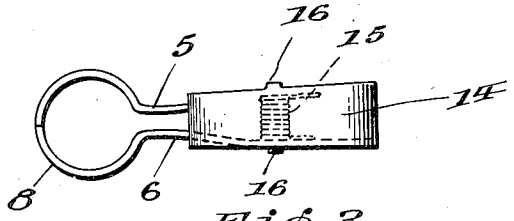

Fig. 3.

Fig. 4.

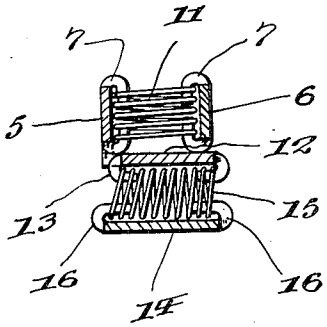

Inventor:
Julius F. Radtke.

By Milo B. Stevens & Co.

Attorneys.

Patented Jan. 1, 1924. 1,479,739

UNITED STATES PATENT OFFICE.

JULIUS F. RADTKE, OF CHICAGO, ILLINOIS.

LAMP HOLDER.

Application filed March 2, 1922. Serial No. 540,557.

To all whom it may concern:

Be it known that I, JULIUS F. RADTKE, a citizen of the United States, residing at Chicago, in the county of Cook and State of Illinois, have invented new and useful Improvements in Lamp Holders, of which the following is a specification.

My invention relates to electric lamp holders, and has for its primary object to provide a device whereby electric lamps may be readily attached to the branches of a tree or to other objects which are desired to be illuminated.

A further object of the invention is to furnish a lamp holder which is strong and durable, exceedingly simple in construction, highly efficient and convenient in practical use, and which may be cheaply manufactured.

With the above and other objects in view, the invention comprises a novel combination and arrangement of parts to be hereinafter described and claimed, and in order that the same may be better understood, reference is had to the accompanying drawing, forming a part of this specification, and wherein the preferred embodiment of the invention is disclosed.

In the drawing,

Figure 1 is a perspective view showing my device with a lamp in place;

Fig. 2 is a top plan view with the lamp removed;

Fig. 3 is a bottom plan view similar to Fig. 2, and

Fig. 4 is a transverse section through Fig. 2.

Referring specifically to the drawing, wherein like characters of reference designate like parts throughout the several views, numerals 5 and 6 denote sheet metal clamping strips having intermediate their ends, diametrically opposite pairs of fingers 7 the free ends of which are bent inwardly and backwardly through an angle of 180° to form substantially loop-like members, the purpose of which will be presently described. The strips 5 and 6 are formed at one end with arcuate clamping portions 8 between which the socket 9 of an electric lamp 10 is adapted to be held.

The clamping strips 5 and 6 are pivotally connected and normally held in clamping position with their dished ends in contact through the medium of a coil spring 11 which is securely and detachably held in position between the strips 5 and 6 by means of the fingers 7 as clearly shown in the drawing. By this construction it will be evident that the spring 11 performs a dual function in that it not only serves to maintain the strips 5 and 6 normally in clamping position but also serves as a bearing or pivot for the strips.

At the end opposite its dished portion 8, and for a substantial distance toward said dished portion, the clamping strip 5 is formed with a lateral inturned flange 12 which carries intermediate its ends a pair of diametrically opposite fingers 13 which are bent downwardly and inwardly with their free ends in alinement to form a loop-like retainer to which there is pivotally secured a clamping strip 14 by means of a coil spring 15 which engages similar fingers 16 carried by the clamping strip 14. It will be evident that this spring 15 also performs a dual function as previously described in connection with the spring 11 and that it may be readily detached if desired. The strip 14 will be normally held in clamping position to effectually grip a limb of a tree or other support between its clamping end and the flange 12 and maintain the clamping strips 5 and 6 in vertical position. The flange 12 also serves as a rest for the clamping strip 6.

Numeral 17 designates an annular, apertured reflector which may be placed above the circumferential opening formed by the arcuate portions 8 when in clamping position, and through the aperture of which the socket 9 of the electric lamp may be inserted, as clearly shown in Fig. 1. By this arrangement it will be seen that the reflector will be securely held against displacement and may be readily positioned or removed as desired.

From the foregoing description, taken in connection with the accompanying drawing, the operation of the device will be apparent and further elaboration is thought to be unnecessary. While I have described and shown the preferred embodiment of my invention, it will be understood that I do not limit myself thereto, since various changes and modifications may be made in the same within the spirit and scope of the invention as defined in the appended claims.

I claim:

1. An electric lamp holder comprising a pair of clamping members having opposed

lamp engaging portions at one end thereof, a pivotal and yieldable connection between said clamping members for yieldingly holding said lamp engaging portions in engaging position, a laterally extending flange carried by one of said clamping members and extending transversely of and beyond one longitudinal edge of the other clamping member forming a support therefor, and clamping means associated with the outer face of said flange for securing said holder to a support.

2. An electric lamp holder comprising a pair of clamping members having opposed lamp engaging portions at one end thereof, a pivotal and yieldable connection between said clamping members for yieldingly holding said lamp engaging portions in engaging position, a laterally extending flange carried by one of said clamping members and forming a support for the other clamping member, and a clamping member yieldably and detachably carried by said flange for securing said holder to a support.

3. An electric lamp holder comprising a pair of separably connected clamping members having opposed lamp engaging portions at one end thereof, a pair of fingers carried by the longitudinal edges of each of said clamping members, said fingers being inturned, a coil spring engaging the fingers of each of said clamping members forming a pivotal and yieldable connection between said clamping members for separably connecting and yieldably holding said lamp engaging portions in engaging position, and a hinge carried by one of said clamping members for securing said holder to a support.

In testimony whereof I affix my signature.

JULIUS F. RADTKE.