May 26, 1936. F. PALMITER 2,042,120

SANDBLAST DEVICE

Filed Oct. 1, 1934

FIG. 1.

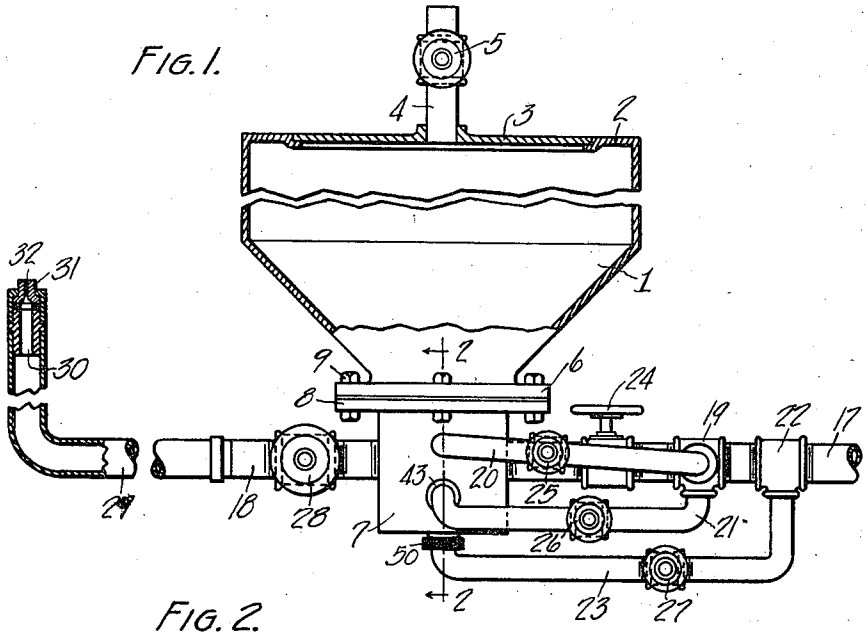

FIG. 2.

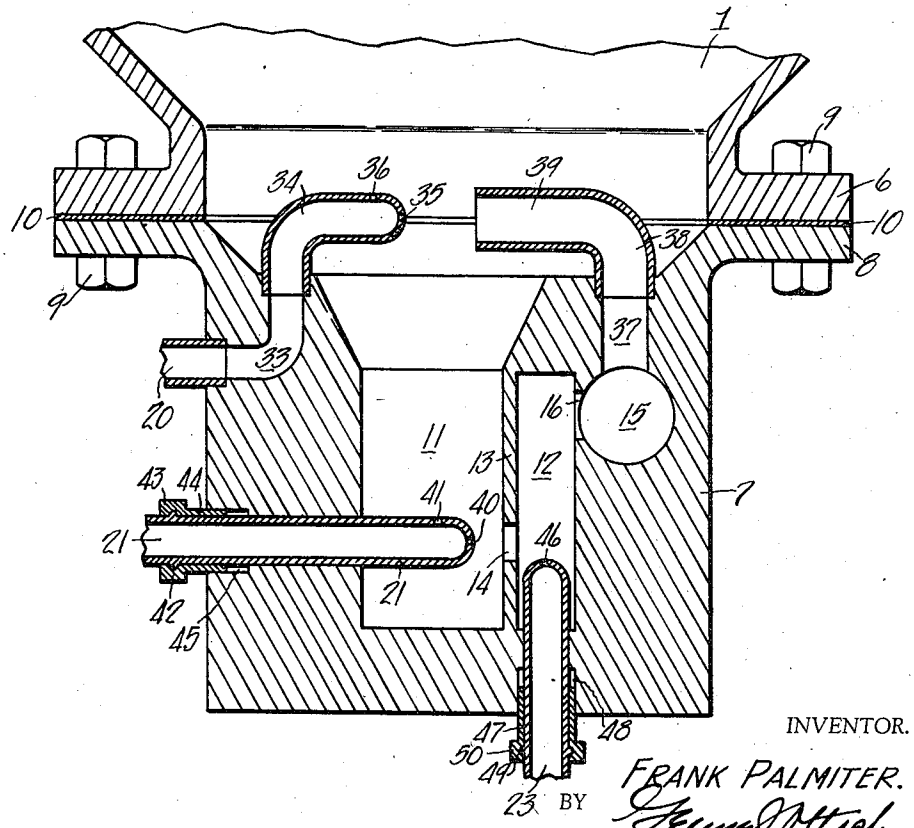

INVENTOR.

FRANK PALMITER.

BY

ATTORNEY.

Patented May 26, 1936 2,042,120

UNITED STATES PATENT OFFICE

2,042,120

SANDBLAST DEVICE

Frank Palmiter, South Bend, Ind.

Application October 1, 1934, Serial No. 746,377

5 Claims. (Cl. 51—12)

The invention relates to a sandblast device, and particularly to a device by which water under pressure may be charged with sand to provide a wet sand blast for cleaning purposes, as for cleaning the exteriors of brick, stone or cement buildings, or for cleaning paint.

The primary object of the invention is to provide a device of this character by which an effective charge of sand may be supplied to a water line subjected to any pressure within a wide pressure range.

A further object is to provide a device of this character by which a water line may be charged with any desired amount of sand.

A further object is to provide a device of this character which cannot be rendered inoperative by clogging or caking of sand therein.

A further object is to provide a device of this character, having a sand container, with means for loosening the sand in the container.

A further object is to provide a device of this character utilizing a sealed sand container and means for directing water under pressure therethrough and to a main water line, with a relief valve for said container which may be opened to permit passage of water into said container from said means and said main water line to loosen the sand in the container.

Other objects and advantages will appear in the following specification, and the novel features of the invention will be particularly pointed out in the appended claims.

In the drawing:

Figure 1 is a view of the device in side elevation, with parts shown in section.

Figure 2 is a fragmentary vertical transverse sectional view taken on line 2—2 of Fig. 1.

Referring to the drawing, the numeral 1 designates a suitable container or hopper adapted to contain sand, said container having a top 2 provided with an opening in which a cover 3 fits to seal the container. A pipe 4 is mounted in the cover 3, said pipe communicating with the interior of the container and being open at its upper end. A valve 5 is mounted in said pipe 4. The container is open at its bottom and is provided with an outwardly directed flange 6 at its lower end.

A casing 7 open at its upper end and provided at its upper end with an outwardly directed flange 8 is secured to the lower end of container 1 by means of bolts 9 passing through the flanges 6 and 8. A gasket 10 is interposed between said flanges to seal the interconnection of said container and casing. Casing 7 is provided with a main chamber 11 open to the interior of container 1, and a secondary chamber 12, the wall 13 between said chambers being provided with an opening 14 establishing communication between said chambers adjacent the bottoms thereof. A passage 15 extends through said casing adjacent the upper end of chamber 12 and communicates with said chamber by means of an opening 16 spaced above opening 14.

A water intake pipe 17 and a water outlet pipe 18, each connected with said casing in communication with the ends of passage 15, form a main water line for the device. A branch fitting 19 is carried by pipe 17 from which extends conduits 20 and 21; and a second fitting 22 is carried by pipe 17 from which extends a third conduit 23. A valve 24 is mounted in the pipe 17 intermediate casing 7 and fitting 19. Valves 25, 26 and 27 are carried by the pipes or conduits 20, 21 and 23, respectively. A valve 28 is mounted in the outlet pipe 18. An elongated flexible hose 29 is connected to the end of outlet pipe 18 which carries a suitable fitting 30 on which is mounted a nozzle 31 having a restricted outlet 32. The intake pipe 17 is connected to a pump or other suitable source of pressure (not shown).

The conduit 20 is fixedly secured to the casing 17 in communication with a passage 33 formed therein adjacent the upper end of said casing. A pipe 34 is secured to the casing interiorly thereof in communication with passage 33 and terminates in a horizontally disposed portion positioned in the upper end of the casing. Pipe 34 is provided with a restricted outlet opening 35 in its end and with a second restricted outlet opening 36 in its upper side. A vertically disposed passage 37 is formed in casing 7 with its lower end communicating with passage 15 of the main water line. A pipe 38 is secured to the casing 7 at the interior thereof in communication with the upper end of passage 37 and includes a horizontally disposed open-ended portion 39 positioned in axially aligned relation to the horizontally disposed portion of pipe 34 and in spaced relation thereto, whereby the open end thereof is disposed opposite the outlet opening 35 of pipe 34.

The conduit 21 extends slidingly through a suitable opening in casing 7 in spaced relation below conduit 20, and terminates within the chamber 11 adjacent the bottom thereof and opposite the passage 14. The inner end of conduit 21 is horizontally disposed and is provided with a restricted end outlet opening 40 and with a second restricted outlet opening 41 at its upper side adjacent its end. Any suitable means for

longitudinally sliding or adjusting the end of conduit 21 may be provided, there being here illustrated a construction comprising a circumferential bead 42 carried by said conduit at a point exteriorly of and adjacent the casing 7. Over this bead 42 fits the head 43 of an elongated externally threaded cylindrical member 44 having threaded engagement with an enlarged outer portion 45 of the opening through which the conduit 21 extends. It will thus be seen that, by rotating the member 44 to shift the same inwardly or outwardly relative to casing 7, the conduit 21 will be longitudinally shifted to vary the spacing of the inner end thereof with respect to the opening 14, for purposes to be hereinafter set forth.

The conduit 23 extends vertically upwardly through the casing 7 and into the chamber 12 thereof to terminate adjacent the passage 14, said conduit being provided with a restricted end outlet opening 46. The conduit 23 is also mounted for longitudinal sliding movement relative to said casing which is adapted to be adjusted by suitable means, illustrated as an elongated cylindrical member 47 having external threaded engagement with an enlarged outer end opening 48 of the passage through which the conduit 23 extends, and a circumferential bead 49 on conduit 23 over which a head 50 of member 47 fits.

The operation of the device is as follows: Relief valve 5, and valves 26 and 27, are normally closed; and valves 24, 25, and 28 are normally open. Water under any desired pressure, from a pressure of 25 pounds to one of 800 pounds, is supplied to the pipe 17. A portion of this water determined by the setting of valve 25 passes through conduit 20, and the remainder passes through pipe 17, passage 15, and pipe 18, to the hose 29 and nozzle 31. The water passing through conduit 20 is directed through passage 33 and conduit 34 to be expelled through restricted outlet 35 in a restricted jet of high velocity directed toward the open end of portion 39 of conduit 38. A portion of the water passing through conduit 20 is also exhausted through the restricted opening 36 in an upwardly directed jet of high velocity. Container 1 is sealed, and hence there is built up in the same a pressure equal to that in the main water line which prevents entry therein of water from the main water line through passage 37 and pipe 38. The high velocity jet of water issuing from the restricted opening 35 of pipe 34 carries with it the sand in its path and discharges into conduit 38 through which and the passage 37 it passes to deliver its charge of sand to the main water line in passage 15. The water issuing from the restricted opening 36 in pipe 34, acts in a high velocity upwardly directed jet against the sand in container 1 to loosen said sand and cause it to fall downwardly between the adjacent ends of conduits 34 and 39, whereby the sand continually moves to a position in the path of the water jet issuing from restricted opening 35 of pipe 34. The device is thus rendered self charging, and danger of caking of the sand to render the device inoperative for its purpose of charging the main water line with sand is eliminated. It will be seen that, the pipe 34 being closed except for its restricted openings 35 and 36 which are of a size through which little or no sand can pass, there is no danger of sand clogging the device while the same is shut off and sand is being supplied to the container. Likewise, the horizontal positioning of open-ended portion 39 of conduit 38 permits only a small amount of sand to enter therein while the container is being filled with sand, and this small amount of sand is easily penetrated and dispersed by the high velocity jet of water issuing from opening 35 of pipe 34 and directed into the open end of portion 39 of conduit 38 in the operation of the device.

When it is desired to clean out the container 1, or to loosen sand caked in the upper portion of the container beyond the effective reach of the jet of water issuing from restricted opening 36 of pipe 34, the relief valve 5 of the container may be opened. This destroys the equality of pressure between the container and the main water line, whereby water is directed into said container through pipe 34 as before, and also from the main water line through passages 15 and 37 and pipe 38, and the caked sand is quickly and effectively dislodged and loosened by the water flow.

It will be understood that the charge of sand to be supplied to the main water line may be controlled by the setting of the valve 25.

When it is desired to charge the water with only a small amount of sand, the valves 24, 26, 27, and 28 are opened, and valve 25 is closed. By this valve setting, water is directed through the main water line and through the conduits 21 and 23. The water passing through conduit 21 issues in a high velocity jet through restricted opening 40 of said conduit and directed toward the passage 14, which jet picks up the sand in its path and carries the same with it into chamber 12. The restricted opening 41 in conduit 21 provides a high velocity upwardly directed water jet to loosen the sand in chamber 11 and cause it to move downwardly into the path of the jet issuing from opening 40 in the same manner as described above relative to opening 36 of pipe 34. The sand charged water directed into chamber 12 as above described is then forced upwardly in said chamber by a high velocity jet of water issuing from the restricted opening 46 of conduit 23, whereby said sand charged water passes through passage 16 into passage 15 of the main water line. The equality of pressure between the casing and container and the main water line is provided by this arrangement in the same manner as heretofore described when the relief valve 5 of the container is closed. Adjustment of the amount of sand with which the water line is charged by the water passing through conduits 21 and 23 may be made by varying the position of said conduits with respect to passage 14. Thus, if the members 44 and 47 are actuated to longitudinally shift said conduits away from passage 14, the charge of sand will be increased; and if said members are actuated to longitudinally shift said conduits toward the passage 14, the charge of sand will be decreased. It will be seen that, the conduits 21 and 23 being closed except for the restricted openings therein, sand cannot enter therein to clog the device; and that the only sand which can enter the chamber 12 must pass through the passage 14 at the lower end thereof and therefore be restricted to an amount small enough to be effectively dislodged and dispersed by the high velocity jets issuing from the restricted openings 40 and 46 of conduits 21 and 23, respectively.

If desired, the valves 25, 26, and 27 may be simultaneously opened in the operation of the de-

vice to provide a high charge of sand to the main water line.

By this construction of device a wet sand blast is provided, which eliminates the dust and dirt incident to use of a dry sand blast, and which prevents burned spots which often result from the use of a dry sand blast. Applicant has found that this device is effectively operable under a wide range of applied pressure, so that it may be used for a wide variety of purposes, as for removing paint from wood, etc., where only low pressure can be used; for cleaning brick and limestone, where a pressure of from 250 to 500 pounds is required; and for cleaning marble and granite, where a pressure of from 500 to 700 pounds is required. It is also been found that the wet sand blast provided by the device at high operating pressures is effective as a cutting implement for brick and stone.

The invention having been set forth, what is claimed as new and useful is:—

1. In a sand blast device, a sand container, a pair of vertically spaced individually controllable means each directing a stream of water through said container, a water line intermediate said first named means, means communicating with said water line and with said container for conveying said streams of water and the sand carried thereby to said water line and means interposed in the sand conveying means juxtaposed to the lower of said first named means for supplementing the same by upwardly discharging a supplemental water stream in said conveying means.

2. In a sand blast device, a sand container, a water line, means communicating with said water line and with said container adjacent the lower end thereof, and means for directing one stream of water through the lower part of said container in the direction of said last named means and a second stream of water in angular upwardly directed relation to and adjacent said first stream to strike and loosen the lowermost of the sand in said container which is above said water discharging means.

3. In a sand blast device, a container having a pair of chambers and a passage therebetween adjacent the lower ends thereof, one of said chambers containing sand, a water line communicating with the other chamber above said passage, and a pair of secondary water lines, one of said secondary water lines extending into said sand chamber to direct a stream of water therein and through said passage, and the other secondary water line extending into the other chamber to direct a stream of water upwardly therein.

4. In a sand blast device, a sand container, a main water line, means establishing communication between said line and the lower end of said container, and a second water line terminating in a nozzle portion within said container and adjacent said means, said nozzle portion having an opening for directing a stream of water through said container and into said means and a second opening adjacent said first opening for directing a stream of water upwardly in said container to strike and loosen the lowermost of the sand above said nozzle.

5. In a sand blast device, a sand container, a main water line, means establishing communication between said main water line and the lower end of said container, and a second water line extending into the container at the lower end thereof opposite said means and having a restricted opening aligned with said means and an upwardly directed opening adjacent said first opening.

FRANK PALMITER.