CLAIMS:

We claim,

1. The Anterior Maxillary Distraction device is an intraoral device to cause distraction osteogenesis in treating adult patients with maxillary deficiency and it comprises the following parts (a) Posterior plate (b) Anterior plate (c) Connector rod (d) Measuring rod (e) coil spring (f) Sliding jig with a screw.
2. The device of claim 1 is fabricated using any biocompatible metal like stainless steel, Titanium, and the like.
3. The posterior plate of claim (1) is a plate fixed to the posterior part of the maxilla below the gingiva, posterior to the distraction bone cut, using two or more bone screws.
4. The anterior plate of claim (1) is the plate fixed to the anterior part of the maxilla in front of the distraction bone cut, using two or more bone screws.
5. The connecting rod of the claim (1) is connected to the fixed posterior plate. This connects the measuring rod which is in the vestibular sulcus over the gingiva, to the posterior plate which is below the gingiva.
6. The measuring rod of the claim (1) extends from the fixed posterior jig to the region of the lateral incisor anteriorly. The rod has measurements calibrated to 0.5mm which aids the operator in accurately measuring the amount of distraction taking place.
7. The low-tension open coil spring of claim (1) coils around the measuring rod and is posterior to the sliding jig. This coil spring prevents any fall back or sliding back of the sliding jig thereby assuring only anterior movement of the Sliding jig and thus, aiding the distraction process. The spring can be made up of NiTi, Stainless steel or other alloys

8. The sliding Jig with the screw of the claim (1) is connected to the anterior fixed plate. It can slide over the measuring rod. The sliding jig has a locking screw, which can be loosened to move the jig, and tightened in the desired position. The movement of the sliding jig, in turn, moves the bone-fixed anterior plate with it causing the gradual distraction process.

24-Nov-2022/114287/2022410675 12/Form 2(Title Page)

PATENT OFFICE CHENNAI 25/11/2022 14:08

SUMMARY OF INVENTION:

Today, distraction osteogenesis is considered to be a standard treatment in the reconstruction of congenitally deficient mandibles and the deficient maxilla.. The distraction device is required to transmit the distraction forces to the bone. However, the distractors which are already available today are either bulky, or difficult to use thereby hampering the day to day activities of the individual .

"The anterior maxillary distractor" is a new intraoral distractor design that can help in advancing the anterior part of the maxilla through distraction osteogenesis. This device has been invented to overcome the shortcomings of the previously available devices and is thus more sleek making it less bulky and less conspicuous, allowing the patient to go about with his regular activities with minimum discomfort to speech and occlusion. This device also has a way of direct estimation of the amount of advancement being carried out making it more accurate and quantifiable.

24-Nov-2022/114287/2022241067512/Form 2(Title Page)

PATENT OFFICE CHENNAI 25/11/2022 14:08

FIELD OF INVENTION:

In Orthodontics, one of the most commonly encountered developmental anomalies of the face is the cleft of the lip and palate. In cases of the upper jaw (maxilla) and lower jaw (mandible) deficiency distractors are used to bring about skeletal correction so as to achieve a normal size of the maxilla and mandible. "The anterior maxillary distractor for cleft " is a new intraoral distractor design that can help in advancing the anterior part of the maxilla through distraction osteogenesis.

24-Nov-2022/114287/2022241067512/Form 2(Title Page)

PATENT OFFICE CHENNAI 25/11/2022 14:08

BACKGROUND OF INVENTION:

In patients with maxillary(upper jaw) deficiency in an adult, the maxilla has to be advanced using surgical means to bring about proper function and aesthetics. The surgical options available are (a) surgical osteotomies and (b) Distraction osteogenesis.

Distraction osteogenesis is a process of sequentially advancing the maxilla using the distraction device. The distraction device can be either an extraoral or an intraoral device that is surgically fixed to the bone after creating the distraction osteotomy cuts.

The device is then activated sequentially every day by a certain distance, which brings about the advancement of the maxilla. Most of distraction devices can be classified as extraoral and intraoral devices. The extraoral devices are bulky and are fitted over the face making them unaesthetic and the patient cannot continue with his day-to-day activities because of it. The existing intraoral devices through esthetic, are bulky and uncomfortable for the patient. These distractors do not also allow for direct measurement of the amount of advancement. Our new device, " The anterior maxillary distractor " is less bulky and is designed to be less conspicuous, allowing the patient to go about with his regular activities with minimum discomfort to speech and occlusion. This device has a way of direct estimation of the amount of advancement being carried out.

24-Nov-2022/114287/2022241067512/Form 2(Title Page)

PATENT. OFFICE CHENNAI 25/11/2022 14:08

DESCRIPTION OF INVENTION:

This device is used in adult patients suffering from maxillary deficiency. For placement of the device, A flap is raised and cuts on the bone for anterior maxillary distraction are given in the maxilla. The new device -" The Anterior Maxillary distractor " consists of the (a) Posterior plate (b) Anterior plate (c) Connector rod (d) Measuring rod (e) low tension open coil spring (f) Sliding jig with a screw.

The Anterior plate (b) is fixed on the bone in the anterior segment (in front of the distraction cut) and the posterior plate (a) is placed on the posterior segment of the maxilla, behind the distraction cut with two or more bone screws.

This device also has an extra-osseous component that lies above the gingival flap in the vestibule and consists of a measuring rod that is fixed to the posterior plate through the connecting rod. The anterior plate is connected to a sliding jig, which slides over the measuring rod. The sliding jig has a screw that can allow it to be fixed in any position on the measuring rod.

The measuring rod has measurements marked on it with every sequential marking corresponding to a 0.5mm increase. There is an open coil spring that is wound around the measuring rod, which prevents the recoil / posterior sliding of the anterior jig when in use.

For the advancement of the maxilla, the screw on the sliding jig is loosened, and the sliding jig is brought forward to advance the maxilla. The amount of advancement can vary depending on the operator and the amount of advancement can be directly measured using the measurements on the measuring rod. The sliding jig is activated every day till the forward placement of the maxilla is achieved.

24-Nov-2022/114287/202241067512/Form 2(Title Page)

PATENT OFFICE CHENNAI 25/11/2022 14:08

THE ANTERIOR MAXILLARY DISTRACTOR

ABSTRACT:

Distraction osteogenesis has become increasingly popular for the reconstruction in craniomaxillofacial surgery. Today, distraction osteogenesis is considered to be a standard treatment in the reconstruction of congenitally deficient mandibles and the deficient maxilla.. The distraction device is required to transmit the distraction forces to the bone. The experience gained by external distractors in various applications has aided the development of internal distraction devices in the field of maxillofacial distraction osteogenesis, particularly in the maxillary and midface regions. The Anterior Maxillary distractor is made up of a bioinert metal like stainless steel or titanium, and consists of two plates that are placed subperiosteal directly on the bone with the help of bone screws and are covered by facial or mucosal soft tissues. On activation this plate brings about the separation of the two segments of the AMO cut, to bring about distraction

24-Nov-2022/114287/202241067512/Form 2(Title Page)

PATENT OFFICE CHENNAI 25/11/2022 14:08

24-Nov-2022/114287/2022241067512/Form 2(Title Page)

710016396

FORM 2

THE PATENT ACT 1970
(39 of 1970)
&
The Patents Rules, 2003
PROVISIONAL/COMPLETE SPECIFICATION
(See section 10 and rule13)

1. TITLE OF THE INVENTION THE ANTERIOR MAXILLARY DISTRACTOR.

2. APPLICANT (S)
(a) NAME: SAVEETHA INSTITUTE OF MEDICAL AND TECHNICAL SCIENCES
(b) NATIONALITY: INDIAN.
(c) ADDRESS: 162, POONAMALLEE HIGH ROAD, VELAPANCHAVADI, CHENNAI - 600077

3. PREAMBLE TO THE DESCRIPTION

PROVISIONAL	✓ COMPLETE
The following specification describes the invention.	The following specification particularly describes the invention and the manner in which it is to be performed.

4. DESCRIPTION (Description shall start from next page.)

5. CLAIMS (not applicable for provisional specification. Claims should start with the preamble "**I/we claim**" on separate page)

6. DATE AND SIGNATURE (to be given at the end of last page of specification)

7. ABSTRACT OF THE INVENTION (to be given along with complete specification on separate page)

Saveetha Dental College * Associate Dean of Innovations Development *

Note: -
*Repeat boxes in case of more than one entry.
*To be signed by the applicant(s) or by authorized registered patent agent.
*Name of the applicant should be given in full., family name in the beginning .
*Complete address of the applicant should be given stating the postal index no./code, state and country.
*Strike out the column which is/are not applicable

Bank:- Indusind Bank
Branch:- Nungambakkam [Saveetha university]
DD No- 004660 56
DD DATE:- 23/11/2022
DD Amt:- 8900/-

PATENT OFFICE CHENNAI 25/11/2022 14:08

DESIGN:

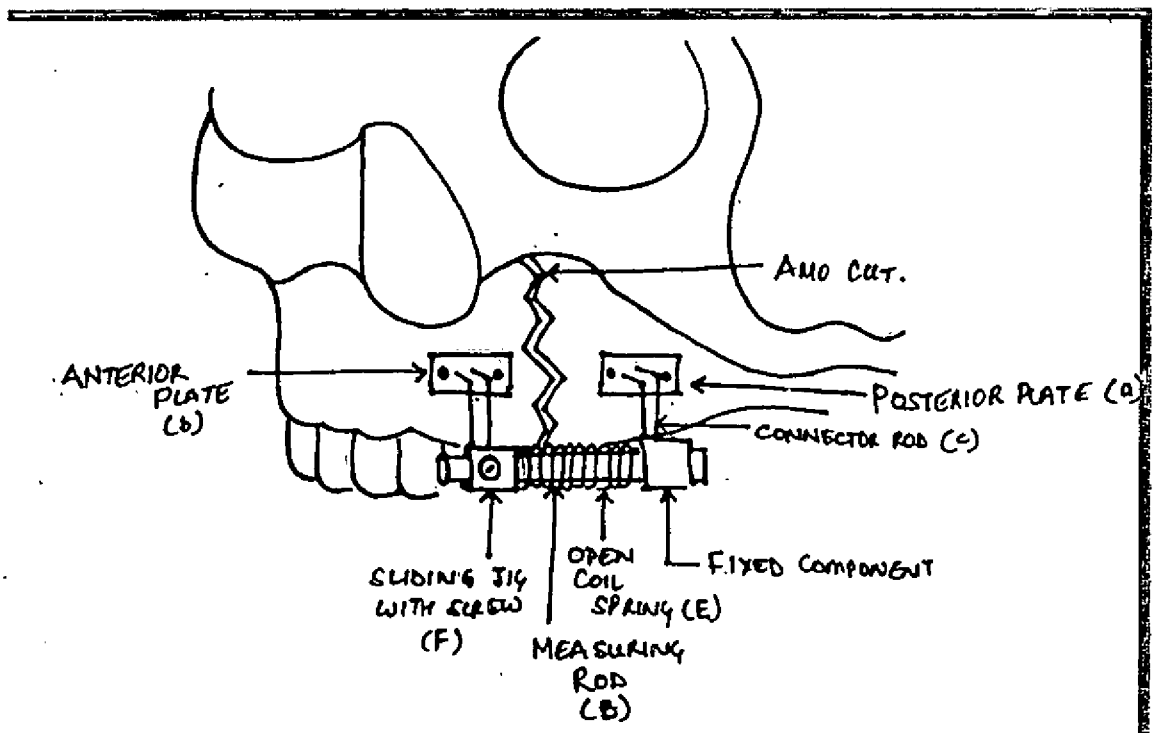

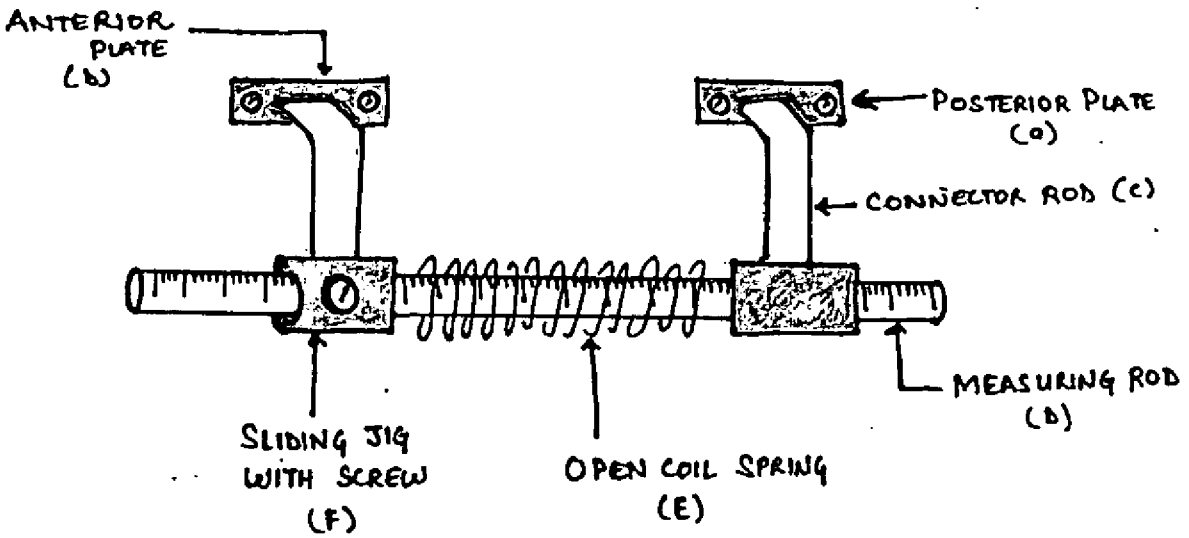

PATENT OFFICE CHENNAI 25/11/2022 14:08

24-Nov-2022/11428/2022410675 12/Form 2(Title Page)