Jan. 5, 1954 J. MEINDL 2,664,601

WINDOW CONSTRUCTION

Filed May 12, 1950 2 Sheets-Sheet 1

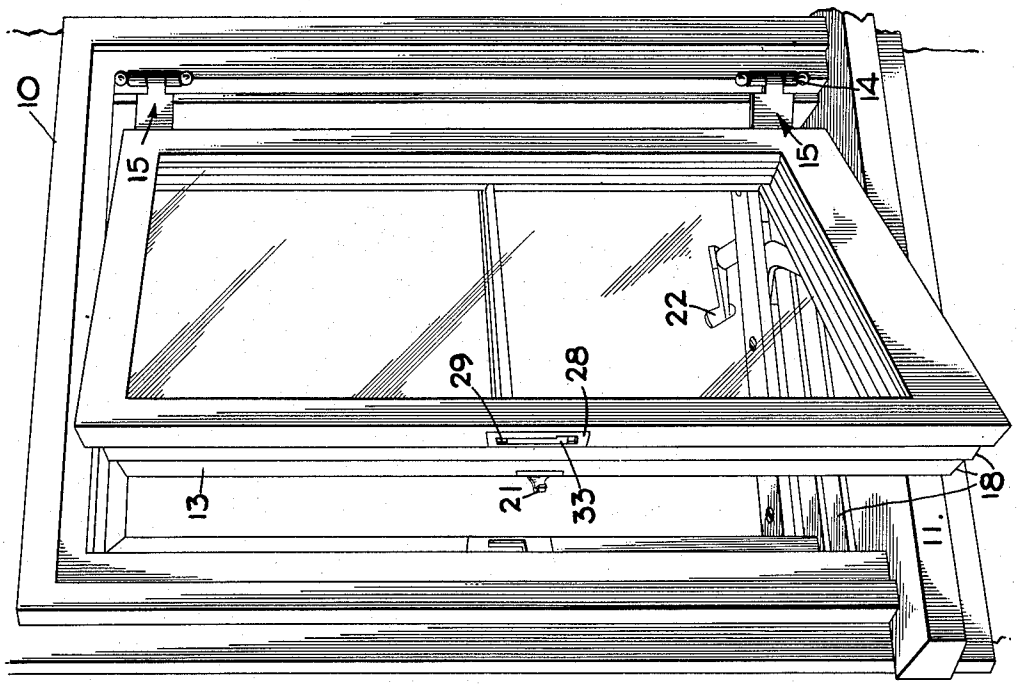

FIG. 2.

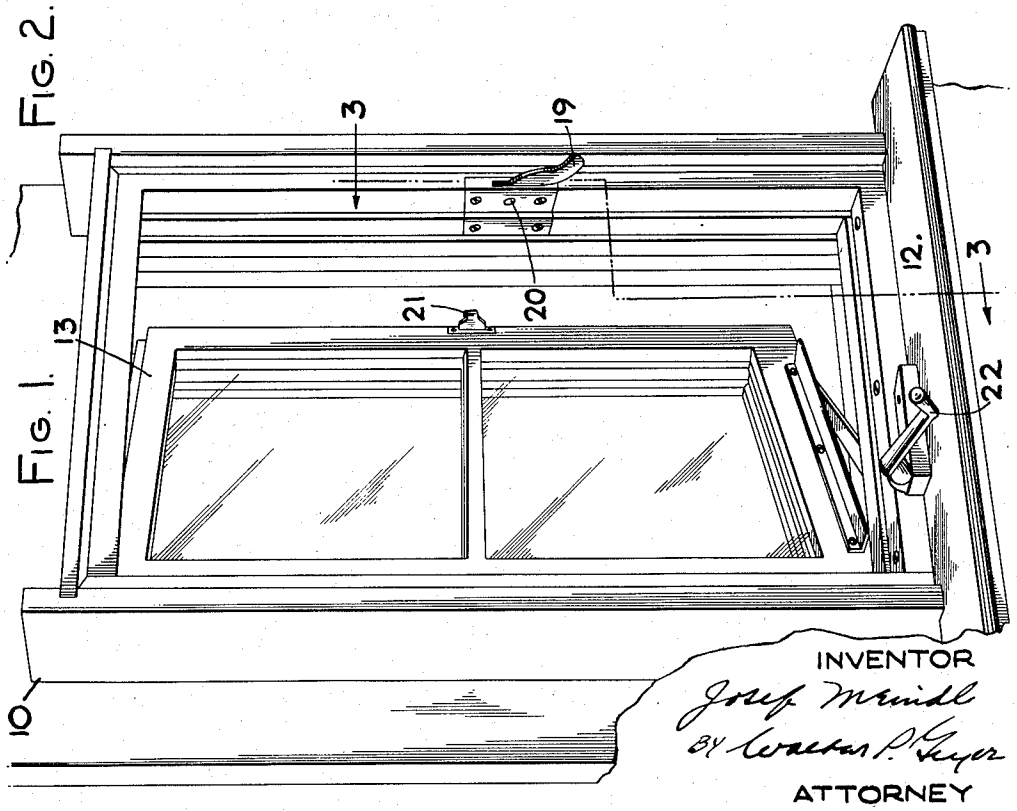

FIG. 1.

INVENTOR
Josef Meindl
BY Walter P. Sayer
ATTORNEY

Jan. 5, 1954 J. MEINDL 2,664,601

WINDOW CONSTRUCTION

Filed May 12, 1950 2 Sheets-Sheet 2

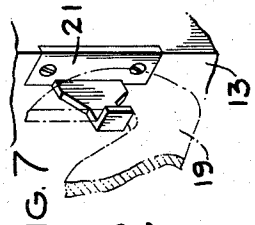

FIG. 7

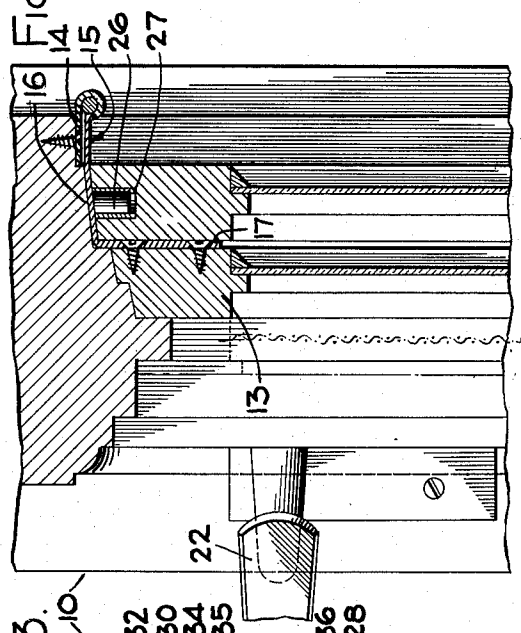

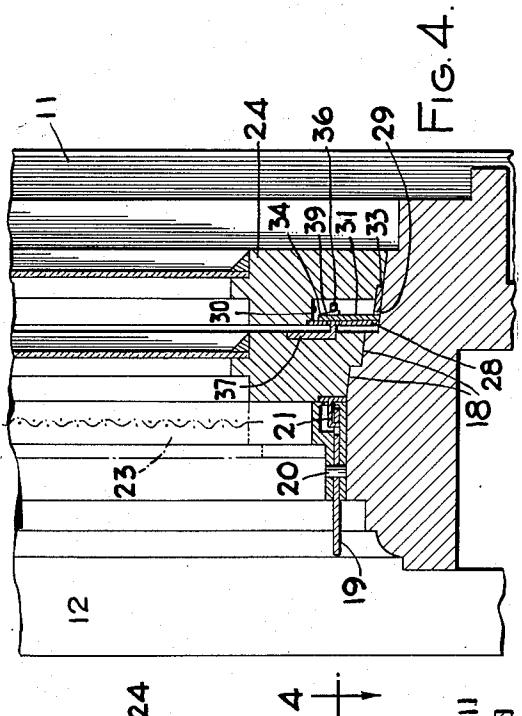

FIG. 4.

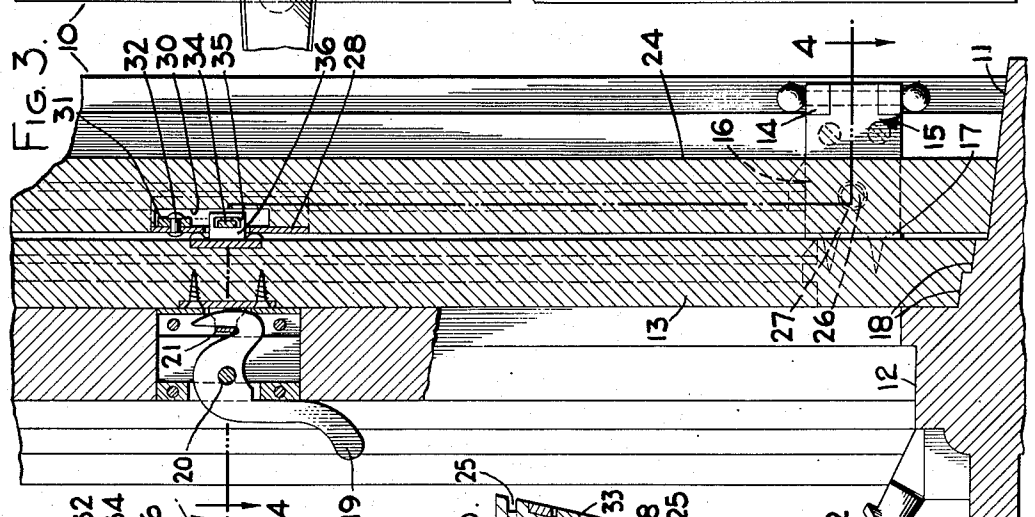

FIG. 3.

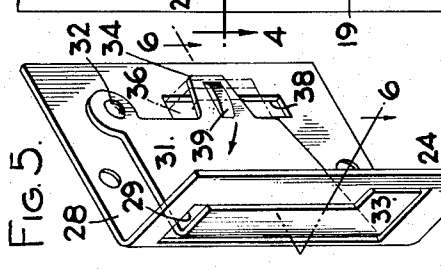

FIG. 5.

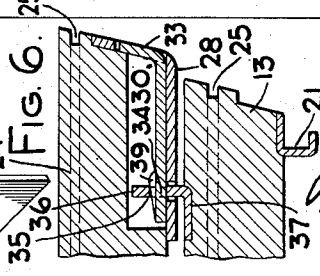

FIG. 6.

INVENTOR

Joseph Meindl

by Walter S. Geyer

ATTORNEY

Patented Jan. 5, 1954

2,664,601

UNITED STATES PATENT OFFICE

2,664,601

WINDOW CONSTRUCTION

Josef Meindl, Buffalo, N. Y.

Application May 12, 1950, Serial No. 161,693

6 Claims. (Cl. 20—53)

1

This invention relates to certain new and useful improvements in window sash construction.

It has for one of its objects to provide a combination sash and storm window construction which is simple, compact and inexpensive in construction, and which is so mounted in the frame as to swing horizontally relatively thereto to a position for ventilating or to facilitate washing the window sash or storm window from the inside of the building.

Another object of the invention is to provide simple and effective means for detachably mounting and clamping the storm sash on the window sash.

Other features of the invention reside in the construction and arrangement of parts hereinafter described and particularly pointed out in the appended claims.

In the accompanying drawings:

Figure 1 is an inside perspective view of my window construction showing the same in a partially open position. Figure 2 is an outside perspective view showing the same in a partially open position. Figure 3 is an enlarged fragmentary cross section taken on line 3—3, Figure 1. Figure 4 is a fragmentary horizontal section taken on line 4—4, Figure 3. Figure 5 is a detached perspective view of the fitting for detachably clamping the storm window to the sash. Figure 6 is a transverse section taken on line 6—6, Figure 5, showing the parts in clamping position. Figure 7 is a perspective view of the sash-lashing fitting.

Similar characters of reference indicate corresponding parts throughout the several views.

In the preferred embodiment of my invention shown in the drawings, 10 indicates the window frame of ordinary construction, which is supported in the building walls in the usual manner, and 11 indicates the outside sill and 12 the inside sill. The main sash 13 of the window is of the casement type hinged to swing horizontally and outwardly on upper and lower hinges whose fixed leaves 14 are secured to the inside face of the window frame. The companion movable hinge leaves 15, which are of angular or L-shape in cross section, each include an outer flange or portion 16 connected at its outer end to the companion hinge-pintle and adapted to lie flatwise against the adjoining side of the window frame in the closed position of the sash, and an inner flange or portion 17 at substantially right angles to said outer flange and connected to the adjoining outer face of the sash 13, as shown in Figure 4. The joint faces of the sash

2

and window frame are stepped, as indicated at 18, to limit the inward movement of the sash and provide a weather-proof seal therefor. A vertically-swinging latching lever 19 is pivoted at 20 to the inner side face of the window frame 10 for releasably interlocking engagement with a companion catch 21 applied to the opposing side face of the sash and designed to draw the sash snugly and firmly against the abutting frame-stop. If desired, a hand-crank controlled assembly 22 of any suitable construction may be operatively interposed between the lower end of the sash and the sill 11 for regulating the opening and closing of the swinging sash from the inside and for retaining it in predetermined open positions for ventilating purposes. In Figure 4 is shown, by dotted lines, a screen frame 23 which may be removably applied to the frame inwardly of the sash during the summer months, and which does not interfere with the opening and closing of the sash.

Detachably fitted to the outside of the main sash 13 to provide an air or insulating space therewith and to swing jointly therewith on the hinges 15, 16 is a storm sash 24 of substantially the same shape and area as such main sash and which fits firmly and snugly in its closed position against the face of the outer sill 12 and the adjoining side and top inner faces of the window frame 10. Furthermore, as shown in Figure 6, the edges of both the main and storm sash are preferably grooved, as indicated at 25, to intercept and shed any rain which might find its way between the joint edges of the sash and the frame. The flange portion 16 of each hinge leaf 15 has a pin or dowel 26 projecting therefrom with its axis substantially parallel to that of the companion sash-connected flange portion 17 of said hinge leaf and the opposing edge of the storm sash 24 has ferrule-fitted openings 27 therein for receiving such companion hinge-bearing pins 26 to support the hinged side of the storm sash thereon. The opposite or free side edge of the storm sash, substantially centrally between its top and bottom edges, is provided with a means for effectually detachably clamping it to the outside of the main sash as well as urging it into firm coupling engagement with the hinge-pins 26. This clamping unit consists of an L-shaped bracket 28 fitted by screws about the joint edge and adjoining inner or marginal face of the storm sash, as shown in Figures 2 and 6. That flange of the bracket overlying the joint edge of the sash has an upright slot 29 therein and the sash has a recess or mortise 30

in register with such slot in which a vertically-swinging latching plate 31 operates. This latching plate is pivoted at 32 to the inner bracket-flange and terminates at its free or outer end in a laterally-bent operating lug or handle 33, which, in its latched or operative position, shown in the drawings, registers with the bracket-slot 29 and is flush with the joint edge of the sash so as not to interfere with its closing. At its opposite or pivoted end the latching plate has a tongue 34 projecting therefrom for latching engagement with an opening 35 formed in the transverse lug 36 of a companion angle-shaped bracket 37 secured to and projecting from the opposing outer side of the sash 13, said lug being free to pass, during the closing and opening movements of the storm sash, into and out of a registering opening 38 formed in the opposing flange of the bracket 28 and in the operating plane of the latching plate tongue 34. The latter has a cam face or raised portion 39 thereon which, in the latching position of the parts, bears against the opposing edge of the lug-opening 35 in the companion main sash bracket 37 to thereby firmly draw the storm sash toward the main sash as the latching plate is swung to its operative position. Simultaneously with this action, those inner edges of the latch plate above and below its tongue 34 abut against the opposing face of the bracket-lug 36 while the opposite face of the latter abuts against the opposite edge of the bracket-opening 38.

When it is desired to remove the storm sash 24 from the main sash 13, the combination window is unlatched by raising the lever 19 to release it from the companion catch 21 and then opened to the position shown in Figures 1 and 2 through the medium of the hand crank assembly 22, it being noted that both sash swing as a unit on the hinges 15, 16. The latching plate 31 is now swung upwardly to withdraw its tongue 34 from the opening in the lug 36 of the main sash bracket 37, after which the free end of the storm sash is fulcrumed outwardly to free said tongue 34 from the sash bracket-opening 38. The storm sash is then pulled away from the hinges to uncouple the same from the hinge-pins 26. The mounting of the storm sash on the main sash is accomplished by a reversal of procedure just described. It should also be mentioned that in the open position of the window, the window-panes can be conveniently washed on their outside from within the house, there being sufficient space at its hinged end to allow the arm to extend therethrough to wash the adjoining portion of the window.

I claim as my invention:

1. In a window construction, a main sash, a storm sash, common hinge means for said sashes each including a moving leaf consisting of a one-piece metal plate composed of two portions at substantially right angles to each other and to which the respective sashes are connected, the main sash being fixedly connected to one of the hinge-leaf portions and the storm sash being removably connected to the complemental hinge-leaf portion, and complementary means on said main sash and said storm sash and said last-named hinge-leaf portion for detachably connecting the storm sash edgewise against the latter and flatwise against the main sash.

2. In a window construction, a main sash, a storm sash, common hinge means for said sashes each including a moving leaf consisting of a one-piece metal plate composed of two portions at substantially right angles to each other and to which the respective sashes are connected, the main sash being fixedly connected to one of the hinge-leaf portions and the storm sash being removably supported on the complemental hinge-leaf portion, the latter and the opposing end of the storm sash having registering, interengaging pins and openings therein, and complementary means on said main sash and said storm sash for releasably clamping the latter in adjoining unitary relation to the main sash.

3. In a window construction, a main sash including hinges for swingingly mounting it on the window frame, each of the hinges including a medial portion between its fulcrum and its point of attachment to the main sash, a storm sash applied to the main sash to move therewith, complementary registrable means on the medial portions of said hinges and the opposing abutting edges of said storm sash for detachably supporting the hinged end of the latter on the hinges, and complemental latching means adjacent the free ends of the main sash and the storm sash for detachably clamping the latter to the former and for urging the storm sash edgewise toward the medial portion of said hinge into its detachably supported position.

4. In a window construction, a hingedy-mounted main sash, a storm sash in adjoining parallel relation to the main sash and detachably supported at one end on the hinge-mountings of said main sash to swing therewith, and complementary means on both of said sash adjacent the free ends thereof for releasably clamping the storm sash to the main sash, said means including a catch on one of the sash and a latching lever on the companion sash engageable with said catch for drawing the storm sash toward the opposing face of the main sash.

5. A hinge mounting for a combination sash and storm window construction, comprising a common hinge member consisting of a one-piece metal plate composed of two portions which are at substantially right angles to each other, the sash being connected facewise to the inside face of the inner portion of the hinge member and the storm window being detachably connected edgewise to the outside face of the outer portion of said hinge member.

6. A hinge mounting for a combination sash and storm window construction, comprising a common hinge member consisting of a one-piece metal plate composed of two portions which are at substantially right angles to each other, the sash being connected facewise to the inside face of the inner portion of the hinge member, the outside face of the companion outer portion of said hinge member having a dowel projecting therefrom with which the opposing edge of the storm window is removably engageable.

JOSEF MEINDL.

References Cited in the file of this patent

UNITED STATES PATENTS

Number	Name	Date
2,142,907	Mains	Jan. 3, 1939

FOREIGN PATENTS

Number	Country	Date
14,220	Great Britain	1907
47,917	Switzerland	1909
60,922	Switzerland	1912
226,302	Germany	1909
294,835	Italy	1932
438,850	France	1912
612,724	France	1926