Nov. 26, 1940. J. H. SNELL 2,223,233

FEEDING MACHINE FOR MAKING TACKS, NAILS, AND THE LIKE

Filed March 15, 1939 5 Sheets-Sheet 1

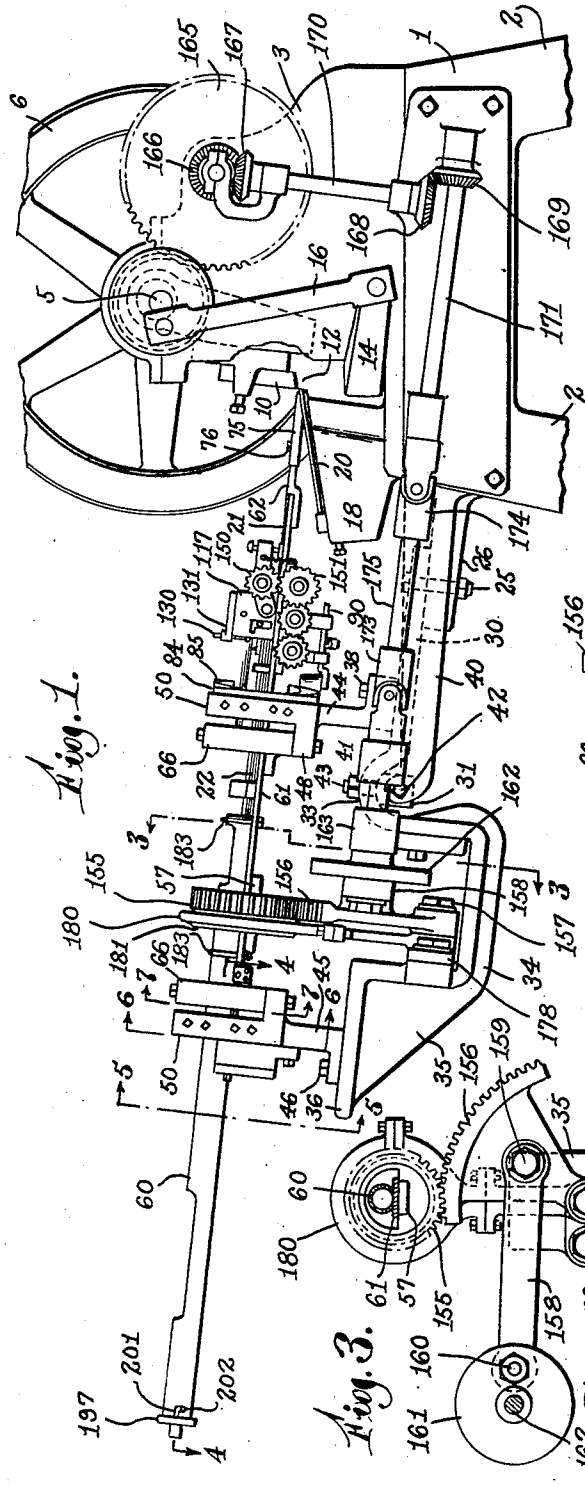

Fig. 1.

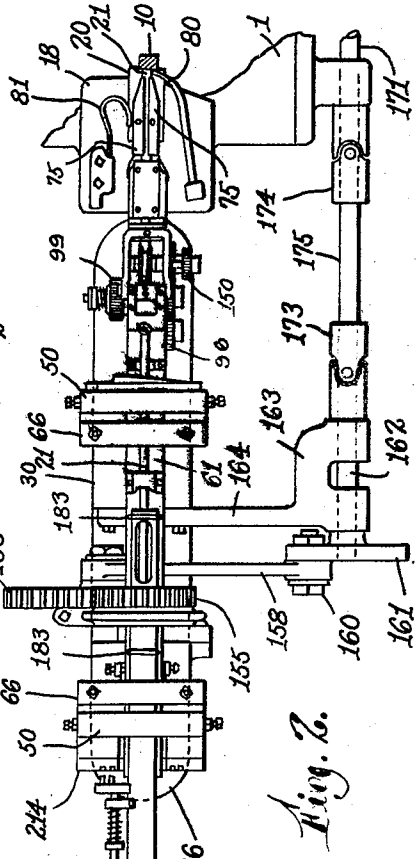

Fig. 2.

Fig. 3.

Inventor
J. Henry Snell
by James R. Hodder
Attorney

Nov. 26, 1940. J. H. SNELL 2,223,233

FEEDING MACHINE FOR MAKING TACKS, NAILS, AND THE LIKE

Filed March 15, 1939 5 Sheets-Sheet 2

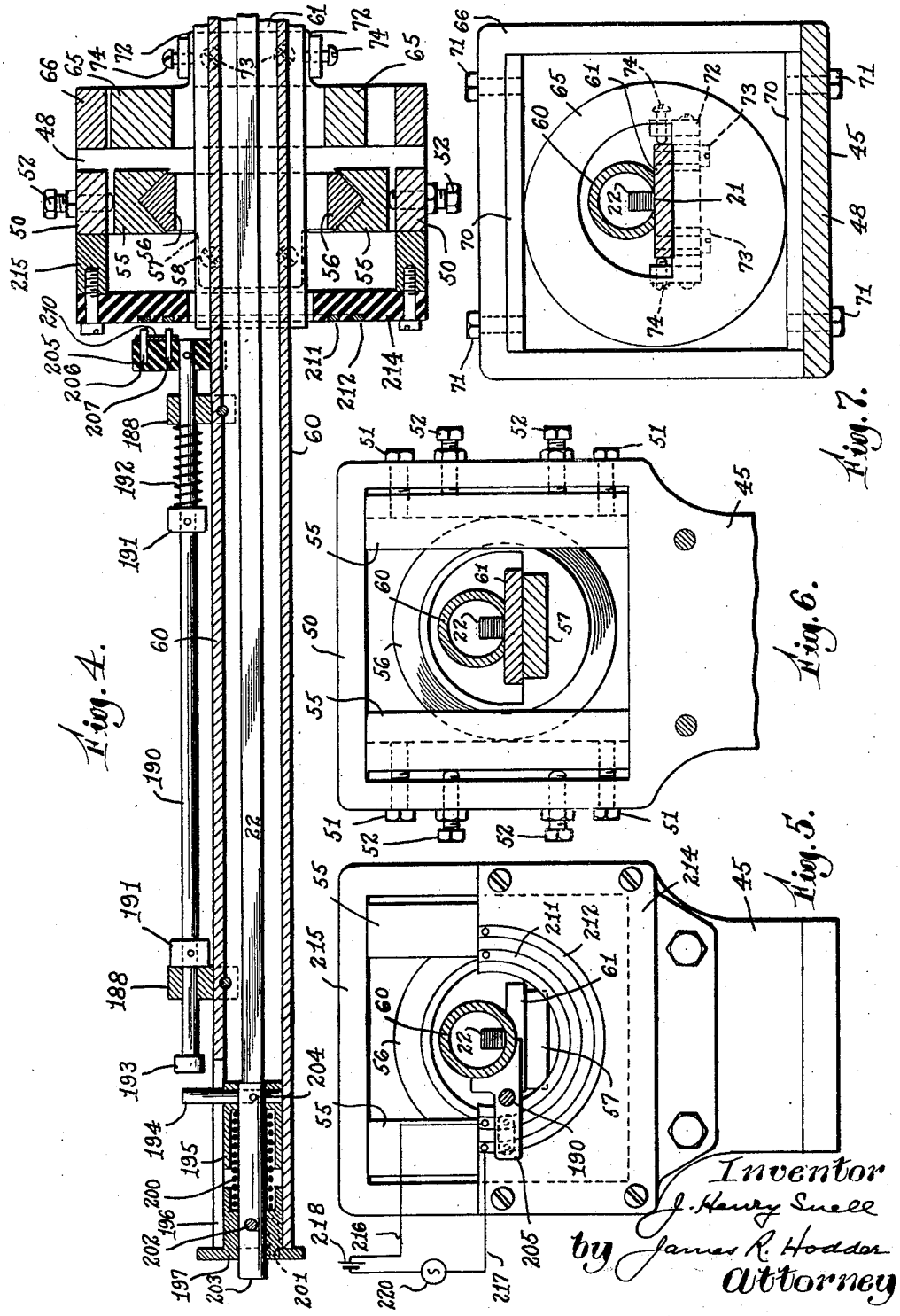

Fig. 4.

Fig. 7.

Fig. 6.

Fig. 5.

Inventor
J. Henry Snell
by James R. Hodder
Attorney

Nov. 26, 1940. J. H. SNELL 2,223,233

FEEDING MACHINE FOR MAKING TACKS, NAILS, AND THE LIKE

Filed March 15, 1939 5 Sheets-Sheet 3

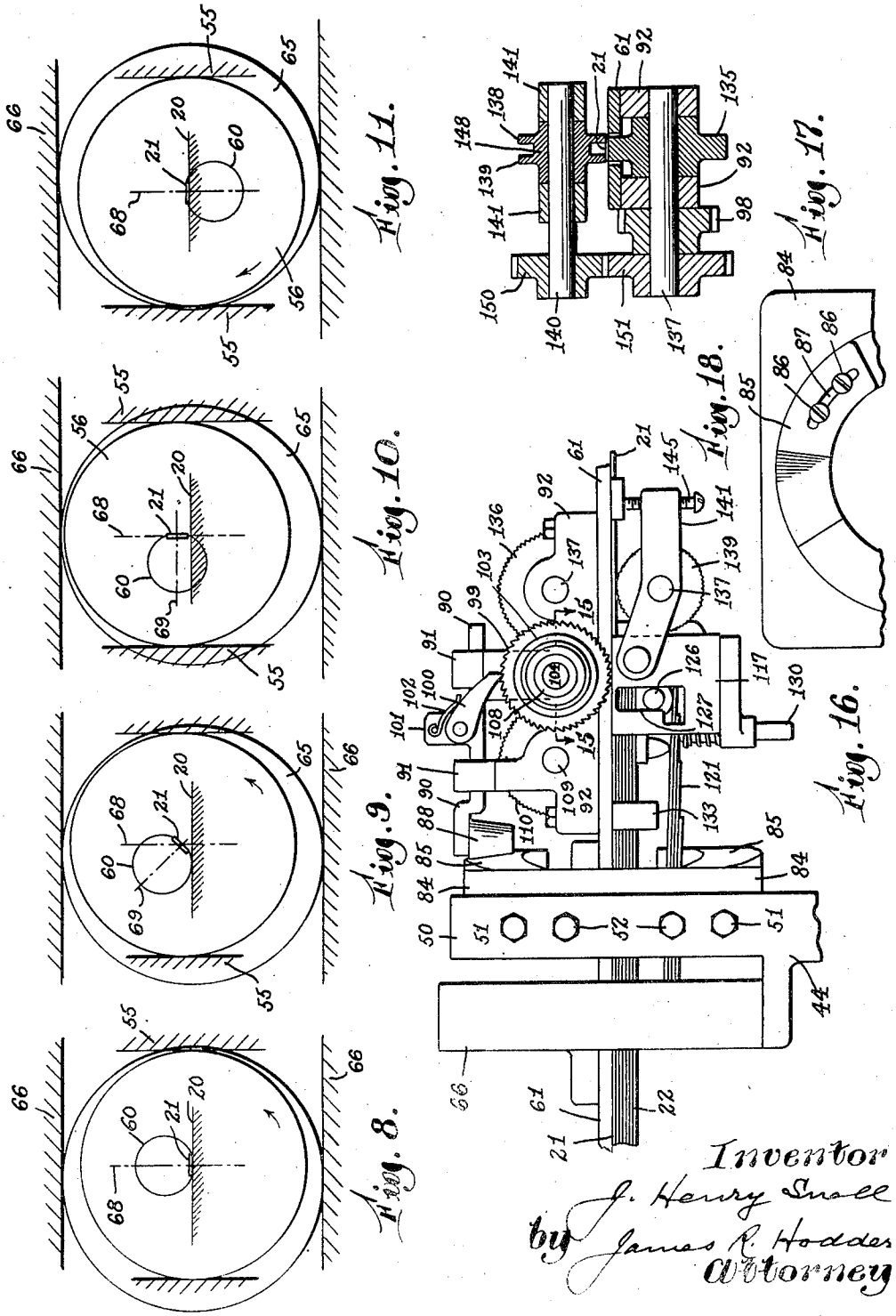

Nov. 26, 1940. J. H. SNELL 2,223,233

FEEDING MACHINE FOR MAKING TACKS, NAILS, AND THE LIKE

Filed March 15, 1939 5 Sheets-Sheet 4

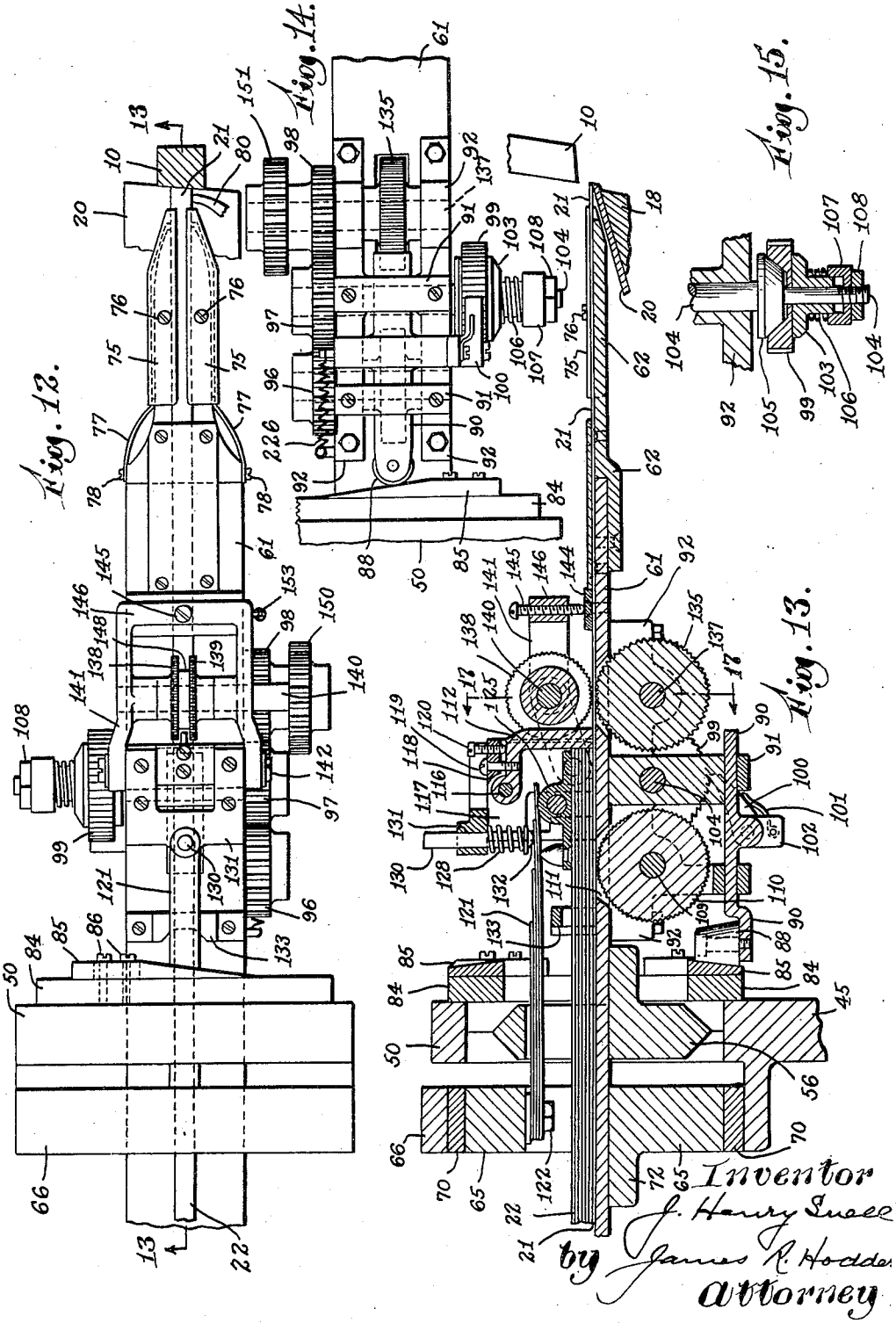

Nov. 26, 1940. J. H. SNELL 2,223,233

FEEDING MACHINE FOR MAKING TACKS, NAILS, AND THE LIKE

Filed March 15, 1939 5 Sheets-Sheet 5

Fig. 21.

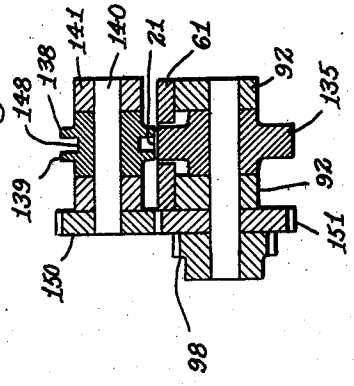

Fig. 19.

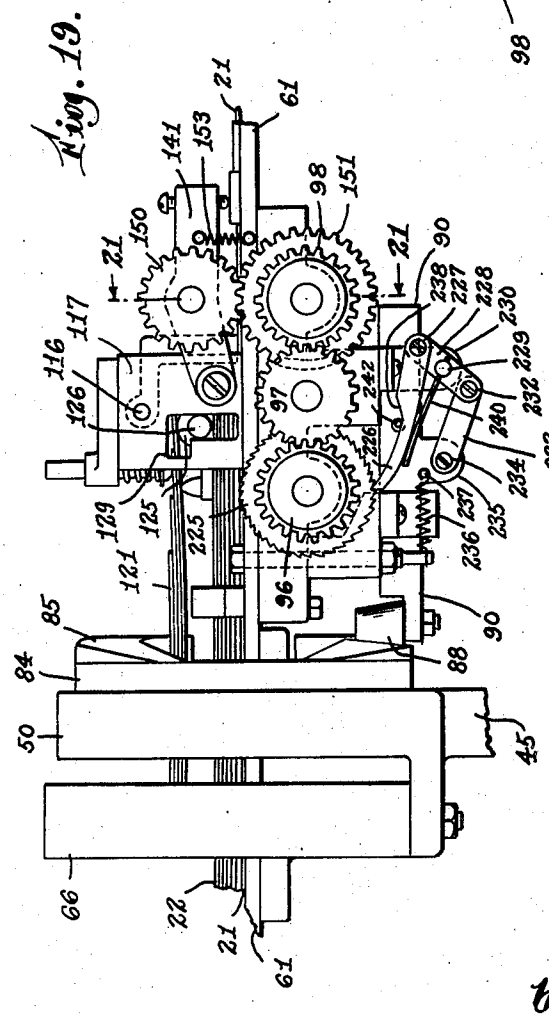

Fig. 20.

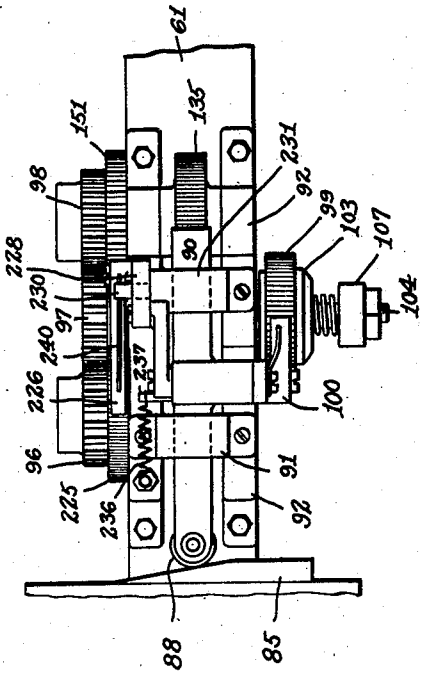

Inventor
J. Henry Snell
by James R. Hoddes
Attorney

Patented Nov. 26, 1940

2,223,233

UNITED STATES PATENT OFFICE

2,223,233

FEEDING MACHINE FOR MAKING TACKS, NAILS, AND THE LIKE

J. Henry Snell, Brockton, Mass.

Application March 15, 1939, Serial No. 262,023

1 Claim. (Cl. 10—171)

My present invention relates to the art of tack and nail-making, and relates more particularly to automatic feeding mechanism for handling the metallic strips or wire to the cutting, heading, and forming dies.

Prior to my present invention it has been customary in the making of tacks, nails, or the like to provide a cutting and heading machine which will cut short lengths of metal from a strip being fed into the machine, and head, hammer, or swage one end into a head of the completed tack or nail. Also, prior tack-feeding devices have usually relied upon the action of a follower, in the shape of a rod, which would abut against the outer end of a strip of material and exert a pushing or feeding action thru a weight swung over a pulley and connected by a cable to the follower, thus forcing the strip into the cutting and heading devices.

As it is usually desirable to form the tack or nail with the end opposite from that which is being formed into the head, to a taper to simulate a point, it has previously been customary to present the metal strip at an angle and rotate the same thru 180° between successive cutting off and heading operations.

Various attempts have been made to provide a feeder carrying a plurality of strips, but such prior feeders, as far as I am aware, relied upon cylindrical barrels or the like carrying strips of material and adapted to be brought successively into cutting position by a partial rotation of the barrel or magazine carrier.

Numerous difficulties have been experienced with all such prior methods, which involved considerable time for refilling the magazine, resetting the weight-driven follower, as well as constant difficulties with the partial rotation of the metal during successive cutting and heading actions.

My present invention aims to obviate the difficulties above briefly outlined and, furthermore, to provide novel, improved, efficient, and positive-acting mechanism for handling the metal strip by providing positive feeding means in place of the prior gravity-actuated devices, arranging a novel and improved magazine structure carrying a large plurality of metal strips, providing effective and positive means for the oscillation or rotation of the strips and, furthermore, eliminating the difficulties during the strip-rotating operation between cutting actions, by mechanism automatically actuated to lift and to move rearwardly the metal strip from engagement with the cutting die during successive strip-cutting operations.

A further important feature of my present invention consists in the construction and arrangement whereby the feeding mechanism is so efficient that a single operator can attend to a larger number of machines than has heretofore been possible.

A still further important feature consists in the feeding devices and the speed of operation possible, giving my present mechanism a greatly increased capacity of output, together with a more uniform product.

Additional features consist of means and mechanism for moving the entire strip-holding and feeding devices rearwardly between successive cutting actions and during the rotation, or partial rotation, of the strip-feeding means to prevent contact of the end of the strip being cut with the cutting dies and, hence, to prevent injury, damage, or scarring of the edge of the strip about to be cut.

In my present application I have elected to illustrate and claim broadly the machine and method wherein the rotation or oscillation of the strip-holding and feeding mechanism, between successive cutting operations, is effected; and in my copending application Ser. No. 340,255, filed June 15, 1940, I have illustrated and claimed my improved mechanism wherein a complete rotation thru 180° of the strip-holding and feeding mechanism is provided.

While I have also herein shown, for illustrative purposes, a magazine and feeding means utilizing straight, flat strips applied to the carrier in stack or magazine formation, I may also utilize rolls or coils of strip material, feeding and rotating, or partially rotating, the same to the cutting dies for the cutting and heading operations.

An important advantage is that my mechanism enables substantially the entire material, whether strips or coils, to be cut and headed, thus utilizing the same and eliminating waste ends which were formerly thrown away. This feature alone is of great importance and advantage.

Other features, novel combinations, and advantages will be hereinafter more fully pointed out and claimed.

Referring to the drawings illustrating a preferred embodiment of my invention, showing my improved machine adapted to carry out my improved process,

Fig. 1 is a side view illustrating in diagrammatic form a typical type of tack or nail-cutting and heading machine with my improved strip-handling and magazine structure;

Fig. 2 is a plan view embodying the cutting and heading machine;

Fig. 3 is a cross-sectional view on the line 3—3 of Fig. 1;

Fig. 4 is an enlarged plan view shown in cross-section on the line 4—4 of Fig. 1;

Fig. 5 is an enlarged cross-sectional view on the line 5—5 of Fig. 1;

Fig. 6 is an enlarged cross-sectional view on the line 6—6 of Fig. 1;

Fig. 7 is an enlarged cross-sectional view on the line 7—7 of Fig. 1;

Figs. 8, 9, 10, and 11 are progressive diagrammatic views illustrating the movement of the strip-holding instrumentalities during the rotating action thru 180°;

Fig. 12 is an enlarged plan view of the strip-gripping and feeding devices;

Fig. 13 is a vertical cross-sectional view on the line 13—13 of Fig. 12;

Fig. 14 is a fragmentary bottom plan view of the strip-gripping and operating means as shown in the top plan view of Fig. 12;

Fig. 15 is a fragmentary view partly in cross-section of the yielding clutch structure;

Fig. 16 is a side view of the strip-gripping and feeding devices when in inverted position;

Fig. 17 is a cross-sectional view on the line 17—17 of Fig. 13;

Fig. 18 is a fragmentary view illustrating an adjustable cam structure;

Figs. 19, 20, and 21 are, respectively, side, bottom plan, and cross-sectional views on the line 21—21 of Fig. 19 illustrating the strip-retracting mechanism.

As shown in the drawings, I have illustrated in diagrammatic form a well known and standard type of nail and tack-cutting and heading machine, comprising a base 1, supported on suitable standards 2—2, and carrying a pair of upstanding side brackets 3 to which is journaled a shaft 5 carrying a driving wheel 6, adapted to be rotated from any suitable source of power, and operating the movable cutting die 10 thru an eccentric and the heading die 12 thru a rocker arm 14, rocked by a link 16 also actuated by an eccentric on the shaft 5, as is usual. A forwardly extending bracket 18 carries the lower fixed shearing die 20 adjustably positioned on the bracket 18 and on which the metal strip 21 rests during the cutting action.

This strip 21 is the lowermost of a stack or pile of corresponding strips, designated generally at 22 constituting the magazine, the lowermost strip of the stack 22 becoming the directly fed strip 21 when the rear end of the strip 21 has been fed forwardly beyond a gate, as will be described.

The entire strip-feeding, rotating, holding, and strip-retracting devices are pivotally supported on a bolt 25 on a forwardly extending bracket 26, which is secured to the front of the base 1, or may be cast integrally therewith. This pivotal capacity is for the purpose of swinging the feeding instrumentalities to present the desired bevel or angle on the end of the strip 21, where it is cut by the moving cutting die 10 against the fixed shearing die 20. This is desirable because of the varying requirements of thickness and width of material being handled, as well as for the resultant size and weight of head for the finished tack or nail.

For this purpose a frame or beam 30 has its forward portion resting on the bracket 26 and secured by said pivot bolt 25, this beam extending rearwardly with an adjusting block 31, secured thereto by a nut 41 on a bolt 43, and being curved upwardly for the purpose, as shown at 33, and thereafter extending downwardly at 34, see Fig. 1, and having a rearward web 35 and top flange 36 to support one of the bearings for the rotatable strip-holding devices, the other bearing being mounted on the forward portion of the swinging frame 30 by a bolt 38.

The forward portion of the frame 30 rests upon the bracket 26, being held in pivotal position thereon by the bolt 25, as above explained, and may be thus adjusted for alignment of the strip-holding and feeding devices carried by the frame for cooperation with the cutting dies. To effect this adjustment, a pair of side arms 40, which may be formed as a part of the bracket 26 and on each side of the same, extend beyond the end of said bracket and are provided with upstanding portions adjacent the curved adjusting block 31, and are each provided with adjusting screws 42 (see Fig. 1), being threaded thru the end portions of the arms 40 in alignment with the block 31 to effect the horizontal adjustment of the beam on the pivot 25, which pivot holds the same and also provides for vertical adjustment for cooperating alignment with the cutting dies.

The two bearings to support the strip-holding and feeding devices will now be described. A forward bearing is mounted on a stand 44 secured by bolts 38 (one not shown) to the beam 30, as previously noted, and a similar stand 45 is secured by bolts 46 (one not shown) to the rear portion 36 of the beam. Each of these standards 44 and 45 extend upwardly in the form of a hollow square frame or housing 50 (see Figs. 5, 6, and 7), which frame is provided in opposite sides with a plurality of adjusting screws 51, 51 and thrusting screws 52, 52 to hold V-shaped bearings 55, in which bearings a rotatable wedge-shaped member 56 is adapted to slide, said member being secured by a flange 57 thru U-shaped bolts 58 to the strip-carrier in the form of a barrel 60.

The V-shaped bearings 55 being vertically arranged thus permit the rotatable member 56 to slide vertically while rotating thru 180°, and these two sets of bearings, spaced as shown in the housings 50, 50, hold the blanks, barrel 60, and feeding devices in substantially balanced relation. Secured to the forward portion of the barrel 60 is a blank supporting plate 61 to support and carry the forward part of the stack 22, as well as the bottom strip 21 being fed into the cutting dies, said supporting plate 61 fitting into a detachable nose-piece 62 (see Fig. 13), which is removably secured thereto to permit different sized nose-pieces to take care of the feeding of different sized blanks.

This arrangement of the V-shaped bearings rotatable in the vertical guideways 55 thus permit the lifting and rotation of the strip 21, as shown diagrammatically in Figs. 8, 9, 10, and 11. Also, the V-shaped bearings provide a thrust bearing to counteract the action of the cutting dies which cut the strip 21 on a bevel and, hence, exert a rearward thrusting action.

In order to effect the lifting and turning of the blank-carrier barrel 60 and plate 61, while permitting the lifting action of the plate as just described, I provide a pair of cams 65 each rotatable in the housing 66 and positioned adjacent the frame or housing 65 and also secured to the barrel 60 and supporting plate 61, so that as the latter is turned, the position, construction, and operation of these cam bearings 65 will act to lift the entire strip and blank carriers and attached devices during the operation of turning thru 180° to present the alternate faces of the strip 21 to successive cutting operations.

This is more fully and graphically illustrated

in Figs. 8, 9, 10, and 11. Also, this turning operation, while keeping the strip 21 in alignment with the cutting dies, is permitted by the rotatable bearing 56 in its guides 55, as just explained.

Thus, it will be seen that in the operation of turning the strip and strip carriers and associated devices thru 180° alternately, the strip 21 is positively lifted above the level of the lower cutting die 20 while said strip is turned over, thus freeing the strip from any dragging, scarring, or damaging on its edge portion.

Referring to the diagrammatic showing of Figs. 8, 9, 10, and 11, I have indicated a vertical line 68 passing centrally thru the strip 21 and its carrier, the barrel portion 60 being indicated for illustrative purposes. During this turning operation, caused by the action of the cam 65 and the rotatable V-shaped bearing 56, the strip 21 is positively lifted while a vertical line 69 diametrically thru the strip carrier is being turned from the position shown in Fig. 8 to the inverted 180° position shown in Fig. 11.

This is a very important function and feature of my present machine and invention, preserving the edge portions of the blank 21 being cut by the dies; whereas, formerly, the end of the strip 21 was constantly forced against the edge of the cutting dies during this 180° rotative operation by the continuous action of a feeding weight, thus scarring, marring, and injuring the edge of every blank cut from the strip, particularly as the cutting dies are of hardened steel while the strip 21 is of softer metal.

This feature, in combination with my novel and positive strip-feeding means, which acts intermittently only, constitutes a most important advantage, as will be readily appreciated.

In order to provide an adjustable surface for each cam 65, I provide wearing strips 70, 70 (see Fig. 7) secured by bolts 71, 71, which also constitute adjusting means for alignment with the other bearings and the cutting dies. Each cam 65 is secured to a flange 72 (see Fig. 7) and bolts 73, 73 threaded into tapped recesses in the work-carrier 61 and also is positioned in alignment by adjusting screw 74—74.

The removable nose-piece 62 at the forward end of the work support 61 is of usual construction and comprises a pair of flange-shaped guides 75, 75, each pivotally mounted on a screw 76, 76 secured to the nose-piece 62, these flange members being thus free to swing and partially enclose or grip the strip 21. In order to exert a gripping and guiding tension on the strip 21 closely adjacent the cutting dies 19 and 20, a pair of flat springs 77 are secured at opposite sides of the work-carrier 61 by screws 78, 78, which springs extend in the rear portion of each flange member 75, 75, thus tending to rock the same on their pivots 76 and exert a yielding pinching and guiding action at the forward end portion of these members 75, as will be clearly appreciated, and as shown in Fig. 12.

An adjustable guide or stop 80 is also provided against which the edge of the strip 21 is held by the action of a spring 81 exerting a yielding tension on the opposite side, see Fig. 2, this stop 80 and spring 81 being suitably secured to the upwardly extending portion 18 of the cutting and heading machine.

My novel strip-feeding mechanism will now be described. This consists of a set of gears acting thru a pawl and ratchet and operated intermittently during the rotative action of the blank carrier thru 180° of each alternate blank-cutting operation, thru a cam surface secured to the blank carriers. As best shown in Fig. 16, I secure a plate 84 to a front face of the forward frame 50 mounted on the bracket 44, which plate has an adjustable cam path 85 secured thereto by a pair of headed screws 86, 86 with their shanks extending thru a slot 87, see Fig. 18. This cam path is traversed by a roll 88 mounted upon one end of a slide 90, which slide extends thru bearings in cross-braces 91, 91 secured to the supporting plate 61 by attachment to the side frames 92, 92. In these side frames are the bearings for the axles of the feeding gears and the pawl and ratchet, viz., the gears 96, 97, 98, and the ratchet wheel 99, the latter which is operated by the pawl 100 secured to the slide 90.

Positioned on the slide 90 is a lug 101 to which is secured a spring 102 adapted to bear upon the pawl 100 and hold the same yieldingly in engagement with the ratchet wheel 99 and, hence, to move said ratchet wheel by engagement of the teeth with the pawl 100 as the roll 88 rides up onto the cam path 85, and, hence, moves the slide 90 to the right, viewing Figs. 1, 2, and 16, thus partially rotating the ratchet wheel 99. This wheel 99 is mounted on an axle 104, which axle carries the intermediate gear 97 in line to rotate the gears 96 and 98 on the opposite side of the frame 92 from that on which the ratchet wheel 99 is mounted. This ratchet wheel is loosely held on the axle 104 by a friction clutch 105 held yieldingly by a spring 106 bearing upon the clutch member 103 and a block 107 mounted on an axle 109 and held in adjusted position by a threaded nut 108.

Thus, in case of any obstruction to the feeding of the strip 21, the ratchet gear 99 will slip on its axle 104 and cause no damage or injury. The gear 96 is mounted on the axle 109, which carries a toothed gear 110 intermediate the bearing plates 92, which gear is of sufficient diameter and adapted to extend thru an opening 111 in the adjacent part of the work-supporting plate 61 (see Fig. 13) and impinge against the forward end of the bottommost strip of the stack 22 to facilitate the feeding from said stack of the bottommost strip, as well as to continue the feeding action on the strip 21 after it is separated from the strip and is being fed forward toward and into the cutting dies.

Just forwardly of this feeding wheel 110 is a gate 112 adapted to act as a stop for the stack of strips 22 but spaced sufficiently from the top surface of the work support 61 to permit the bottommost plate in the stack to be forced thereunder.

In order to provide a proper adjustment for this gate, I mount the same on a pivot 116 secured to upstainding pairs of plates 117 secured at each side of the support 61, having a cross-bar 118 thru which are fitted thrusting and tightening screws 119 and 120, respectively, as clearly shown in Fig. 13. Thus, an accurate adjustment of the opening underneath the gate 112 is provided and suitable for adjustment for handling strips of varying thicknesses.

In order to hold the forward portion of the stack 22 downwardly with some tension so as to cooperate with the feeding action of the toothed wheel 110, I arrange a spring 121 secured by a bolt 122 to the inner side of the cam 65 in position to bear upon a cross-member 125 secured on a shaft 126 extending crosswise and adapted to traverse a groove 127 in each plate 117. In order to exert additional tension, when de-

sired, on the outer end of the leaf spring 121, I may provide an additional spring 128 encircling a rod 130 extending thru a bridge 131 uniting the top of the plates 117 and in alignment to have the head 132 of said rod bear on the forward end of the leaf spring, giving a firm tension thereon, and insuring the impinging of the teeth in the feed wheel 110 against the bottom of the strip 21. Notches 129 in each of the plates 117 enable the shaft 126 to be fitted therein to hold the cross-member 125 upwardly during the refilling of the stack 22.

I may also provide a bridge 133 (see Fig. 13) which facilitates the feeding and guiding of the stack into position against the gate 112 and on which also the leaf spring 121 may rest when the last strip is being fed thru the gate.

While the feeding action of the wheel 110, as above explained, is sufficient to feed forwardly a strip from the bottom of the stack and to continue such feed to the end of the bottom strip of the stack 22, yet it is also desirable to have an additional feeding means forward of the gate 112 to continue the feeding action on the strip 21 after it has left the position of the feed wheel 110 and before the next succeeding plate in the stack 22 has dropped down behind the rearmost end of the strip 21 being operated upon. This occurs as the end of the strip 21 passes thru the gate 12; whereupon the succeeding strip then becomes the member 21 and abuts against the end of the forward strip.

To provide this additional feeding means, I arrange an upper and lower toothed feeding wheel, the lower feeding wheel 135 being mounted on an axle 137 to which the gear wheel 98 is keyed, and the upper feeding wheels preferably comprising a pair of feeding wheels 138 and 139 (see Figs. 12) mounted on an axle 140 carried by the arms of a pivoted yoke 141.

This yoke has its spaced arms pivoted on a shaft 142 extending thru the plates 117, and at the forward or U-shaped part of the yoke where it spans the work supporting plate 61 is a bridge 144 engaged by a set screw 145 threaded thru the cross-portion 146 of the yoke, thus providing an adjustment for height and bearing of the feeding wheels 138 and 139 against the top of the strip 21 and in cooperative feeding engagement with the bottom feeding wheel 135.

The top pair of feeding wheels are preferably mounted on a hub 148 (see Fig. 17), and the shaft 140 on which they are secured is, preferably, positively rotated by a gear 150 secured to the outer end of the shaft 140 and meshing with the gear 151 on the lower shaft 137 which carries the driven gear 98 and, hence, imparts positive rotative movement to each.

To hold the yoke 141 in yielding engagement, I prefer to arrange a spring 153 secured at one end to a pin in the yoke 140, with its opposite end attached to a pin in the side of the supporting plate 61. Thus, during the rotative action caused by the pawl 100 on the gear 99 successive movement is imparted to the feeding wheels 110, 135, and the double wheels 138 and 139, as will be readily appreciated. In order to provide the rotation of the barrel 60, supporting plate 61 and associated parts, and the strips to be cut, I arrange at any convenient place, preferably between the sets of bearings 50, 50 and 66, 66 (see Fig. 1) a gear wheel 155, and I positioned a geared segment 156 arranged to mesh thereawith.

This segment 156 is pivotally mounted on a shaft 157 attached to the portion 35 of the beam, and oscillating motion is imparted to the rock segment 156 by a link 158, having one end pivoted at 159 to the segment and the other end pivotally secured at 160 to a disc 161, which is attached to a shaft 162, which shaft, in turn, is mounted in a bearing 163 supported to the beam by a bracket 164, (see Fig. 2) and receives rotative action from a driving portion of the cutting and heading machine.

For this purpose, I provide a gear 165 mounted on a part of the frame and adapted to mesh with a gear on the driving wheel 5 or other convenient moving part of the cutting and heading machine. From this gear 165 thru a set of bevelled gears 166 and 167, and 168 and 169, operating on shafts 170 and 171, respectively, (see Fig. 1), I rotate the shaft 162 by connecting the same thru universal joints 173 and 174 and a shaft 175, (see Figs. 1 and 2), whereby rotation of the shaft 162 thus imparts oscillating action to the rock gear 165, which thereby alternately turns the strip carrier and its associated parts thru alternate arcs of 180° in timed relation to the nail-cutting and heading dies and devices

In order to insure a bearing adjacent the gear 155, I provide an encircling strip 180 positioned about a circular bearing 181 secured to the barrel 60 and overlapping portion of the supporting plate 61, which strip, in turn, is also secured to the portion 35 of the beam.

Any suitable arrangement for uniting the barrel 60 and supporting member 61 may be employed, but preferably I utilize a plurality of U-shaped bolts 183 so that both the barrel or stack 22 and the adjacent portion of the plate 61 will be substantially and strongly united.

It is desirable to have an automatic signal which will notify the attendant when the last strip in the stack 22 has been reached to permit the attendant to then refill the barrel 60 with an additional quantity of strips. For this purpose, I provide an automatic signaling device, as best shown in Fig. 4. Mounted on the barrel 60 by a pair of lugs 188, 188 is a sliding rod 190 having secured thereon by set screws in adjustable position collars 191, 191, one of said collars being fitted to compress a coiled spring 192 between the collar and the adjacent lug 188. The outer end of the rod 190 may be provided with a knob 193 in position to be engaged by an upstanding post 194 secured in a sliding cup-shaped member 195 fitted within the outer end of the barrel 60, said barrel having a slot 196 thru which the post 194 may slide. A plug 197 is rigidly secured to the open end of the barrel and a coiled spring 200 exerts an expansible action on the plug 197 and the sliding member 195 carrying the post 194.

This plug 197 may be attachably and quickly fitted to the end of the barrel by a bayonet joint comprising a slot 201 and a pin 202, so that when the stack 22 of strips are fitted in the barrel 60 and positioned firmly against the gate 112 and under the tension of the leaf spring 121, the barrel 60 can be closed by fitting in the spring-pressed members just described which are held united by a central rod 203, with the forward end of the rod pinned to the sliding portion 195 by a pin 204, and the rearward portion held by the bayonet joint attachment. This is arranged so that the member 195 bears against the end of the stack 22 and will be kept spaced from the rod 190 until the last strip in the stack 22 has

dropped below the gate 112 and has been moved forwardly by the feeding wheels, whereupon the spring 203 forces the sliding portion 195 forwardly, the rod 194 strikes and moves the horizontal rod 190 forwardly and is actuated to effect a signal, such as a light, bell, or the like.

For this purpose I attach to the forward end of the rod 190 an insulated plate 205 carrying a pair of contacts 206 and 207 connected by a current-conducting plate 210, with said contact points in alignment to engage strips 211 and 212 respectively on an insulating plate 214 secured on a housing 215 attached to the adjacent portion of the frame 50. By this arrangement an electrical circuit is completed thru the wires 216 and 217 and a battery 218 to a signal 220, indicating to the operator that this particular machine is ready to have the magazine replenished.

The operator has all the time in which it takes to fit the lower strip 21 lengthwise of the barrel 60 and supporting plate 61, and thereafter the machine automatically takes care of its requirements until the entire mass of the stack 22 has been used up, when another signal will be made.

In order to provide a retrograde or backward movement to the strip 21, when desired, I provide means which will reverse the rotation of the set of strip-feeding wheels 135, 138, and 139. For this purpose I arrange on the slide 90, actuated by the wheel 88 as it rides on the cam 85, a reverse pawl and ratchet wheel, thus effecting a reverse rotation of the gear wheels and consequently of the feeding wheels. It is desirable, however, that such a retroactive or backward movement be very slight compared to the forward feed movement imparted by the feeding action of the pawl 100 and its gear 99. Consequently, I mount an extra gear wheel with very fine teeth 225, (see Figs. 19, 20, and 21) on the shaft 109 and position a pawl 226 in alignment therewith to engage and partially rotate this gear wheel 225 in reverse direction from that of the forward feeding pawl and gear when the roll 88 moves downwardly on the lowest part of the cam path 85, which happens at each end of the 180° rotative oscillation period.

In order to operate the wheel 225 the short distance required for this action, I mount the pawl 226 at 227 on one end of a lever 228, which lever is mounted on a pivot 229 on a lug 230 secured to a cross-bar 231 on the upstanding members 92.

At the opposite end of the lever 228 is a pivot 232 joining with the lever 233, which lever has its opposite end pivotally secured at 234 to the slide 90. A coiled spring 236 normally holds said slide 90 abutting against the cross-brace 91, one end of said spring being attached to a post 237 on the slide and the opposite end at a fixed point, as shown in Figs. 19 and 20. A spring 240 having its end fitted thru an opening in the pivot 229 is positioned to bear against the pawl 226 to hold the end of same in engagement with the teeth 225. Secured to the slide 90 in position to be engaged by a cam surface 238 on the underneath part of the pawl 226 is a stop 242. Consequently as the slide 90 moves to the right, carrying the pin 242 therewith, the cam surface 238 rides up over the pin 242 lifting the end of the pawl 226 out of engagement with the teeth of the gear 225 and does not permit the pawl to engage the teeth until the last retrograde action of the slide 90 just before the roll 88 comes to rest on the lowest part of the cam path 85. Hence there is a very slight retrograde movement imparted by the pawl 226 and gear 225, withdrawing the strip 21 only slightly from its engagement with the cutting dies, but sufficient to prevent scarring, roughing, marring, etc.

The operation of my machine has already been described, and it will be appreciated that I have provided a novel and improved nail-cutting machine with means for holding a large number of blanks or strips in a stack and in parallelism with each other, operating to permit the lowest blank at a time to be fed from the stack underneath a gate, together with novel and positive gear-actuated feeding means arranged to engage and feed the strip from the forward end as it is withdrawn from the stack and force it into the cutting and heading instrumentalities.

Furthermore, I have provided positive-acting devices which will automatically protect the end of a strip from injury, marring, or dragging across the cutting dies as the strip is rotated for 180° between successive cutting actions by lifting the strip from the bottom die and also by positively retracting or withdrawing the strip slightly and sufficiently to prevent contact with the dies during this rotative action. Efficient means are provided for signaling to the operator when the stack is nearly empty, with means to facilitate quick replacement of a plurality of strips in the magazine, thus permitting the machine to work automatically until the entire stack is used up.

Furthermore, by my improved mechanism and the positive feeding devices, the usual waste on strips is practically eliminated, as the entire strip can be fed into the dies with a minimum of waste; whereas, formerly, a substantial part of the end of each strip had to be counted as waste because of the nip required for the feeding weight. The high-speed, improved, and more uniform output, and compactness of my improved machine constitute important advantages.

I claim:

Automatic feeding apparatus of the kind described for cooperating with nail-cutting and heading machines, comprising a barrel adapted to hold a stack of strip material, a plurality of spaced circular bearings mounted on said barrel eccentrically with its axis and adapted to maintain the axis in the same alignment during the path of eccentric movement, a pair of fixed guides each adapted to cooperate with said eccentrically mounted circular bearings, means to effect a rotative action on said barrel thru oscillations in timed relation with the cutting and heading machine, said oscillations effecting a horizontal lifting of the barrel and strip being cut between successive cutting actions, means to separate the lowermost strip from said stack within the barrel, and gear-actuated gripping wheels to engage the forward end of said strip and feed the same, said feeding gears being actuated intermittently by the oscillation of the barrel, and means to retract said barrel intermittently between cutting actions while maintaining said axis in the same aligned position during the eccentric rotation of the barrel.

J. HENRY SNELL.