Feb. 25, 1969 W. B. PRIDY 3,429,374

OIL WELL ELECTRICAL CABLE TENSIONING

Filed Aug. 21, 1967

Sheet 1 of 2

FIG. 1

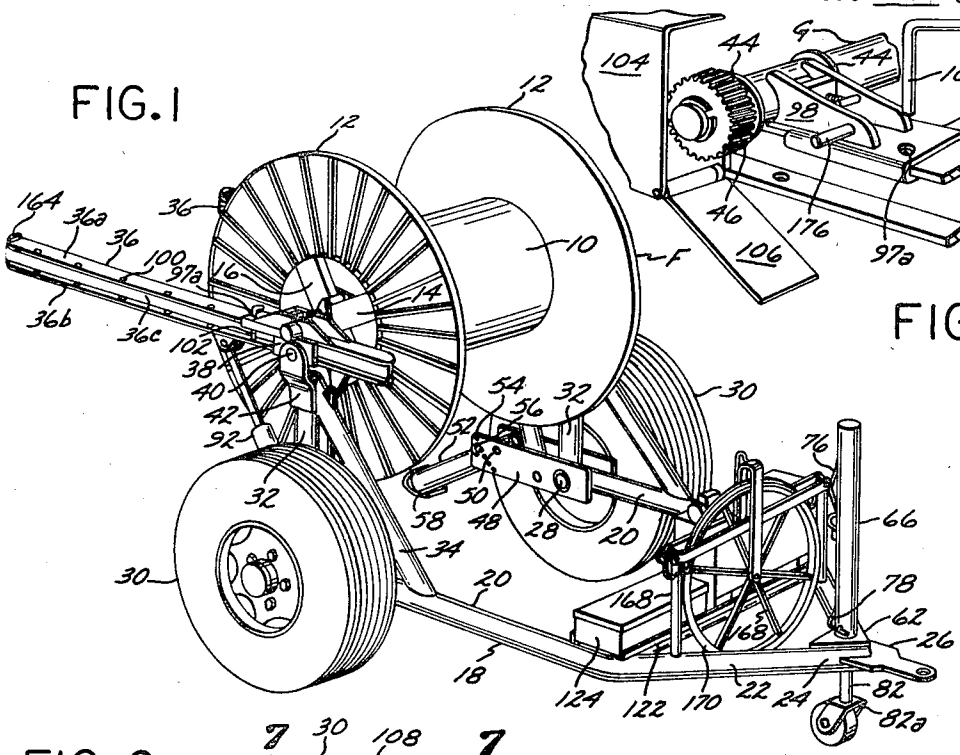

FIG. 3

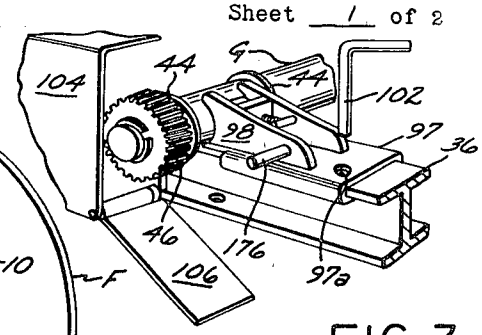

FIG. 2

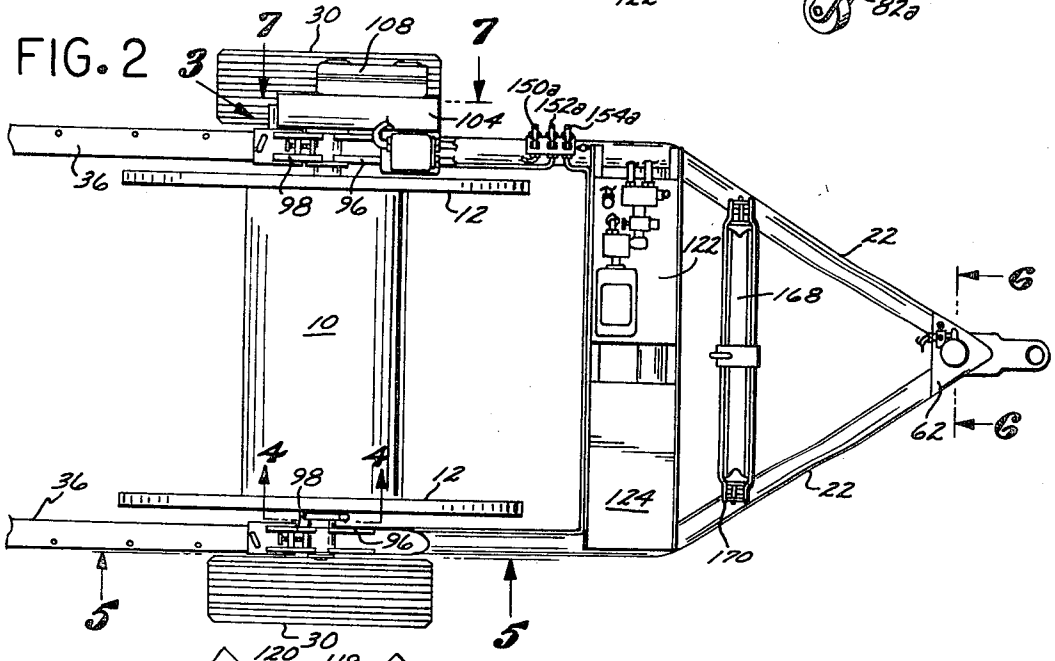

FIG. 4

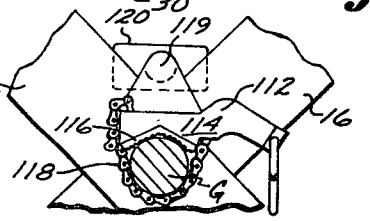

INVENTOR.
WHETSTINE B. PRIDY
BY
William G. Babcock
ATTORNEY

OIL WELL ELECTRICAL CABLE TENSIONING

Filed Aug. 21, 1967

FIG. 5

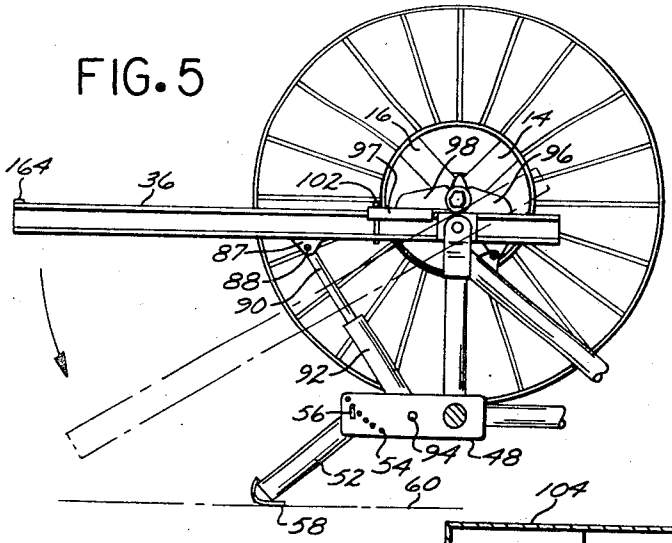

FIG. 6

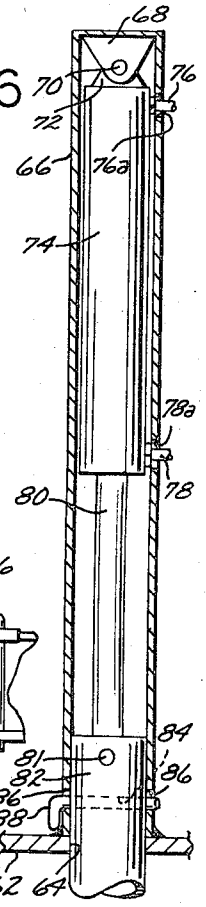

FIG. 7

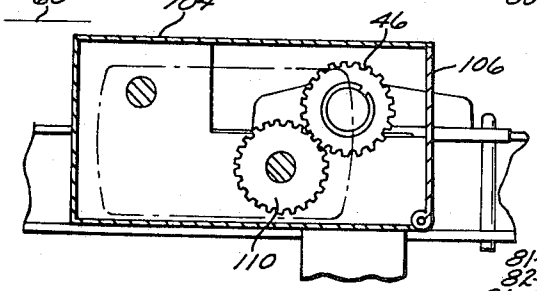

FIG. 8

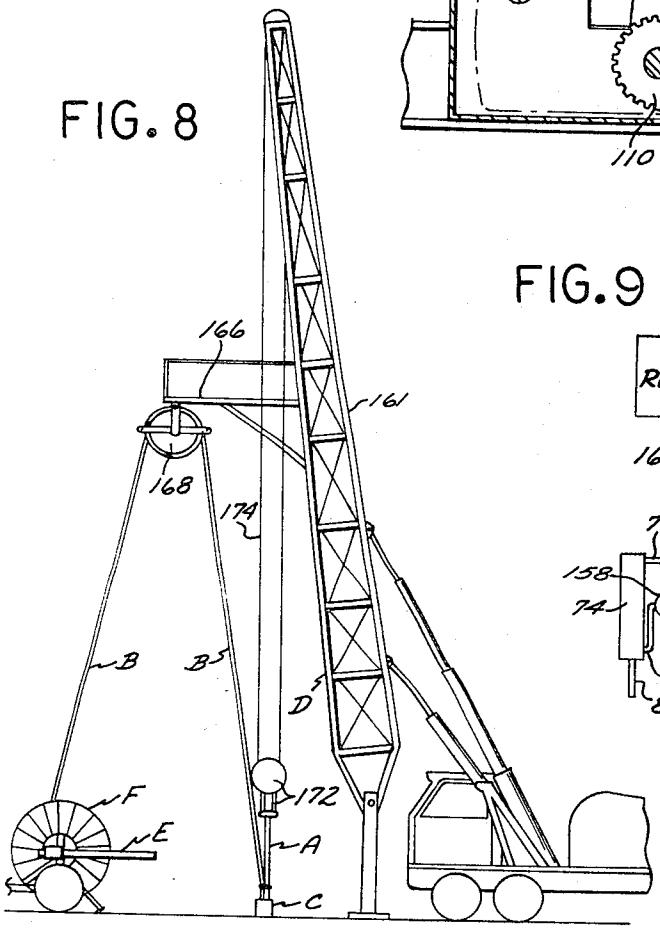

FIG. 9

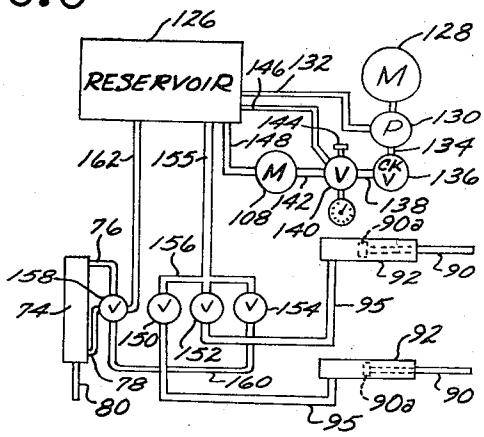

INVENTOR.
WHETSTINE B. PRIDY
BY
William C. Babcock
ATTORNEY

United States Patent Office

3,429,374

Patented Feb. 25, 1969

3,429,374

OIL WELL ELECTRICAL CABLE TENSIONING

Whetstine B. Pridy, Lakewood, Calif., assignor of one-third each to Harold Jordan, doing business as Jordan Rental & Service Company, and John M. Phillips, both of Long Beach, Calif.

Filed Aug. 21, 1967, Ser. No. 666,229

U.S. Cl. 166—65 9 Claims

Int. Cl. E21b *41/00, 43/00;* B66d *1/50*

ABSTRACT OF THE DISCLOSURE

A portable device for:

(1) automatically winding electrical cable on a spool as sections of said cable are intermittently removed from banded positions on stands of tubing as the latter are pulled from a well;

(2) storing the cable after removal thereof from a well;

(3) maintaining a desired tension on the cable during the tubing pulling operation;

(4) maintaining a desired tension on the cable as it is unwound from the spool and rebanded to stands of tubing as the latter are lowered into the well; and

(5) braking the rotation of the spool as the cable is intermittently unwound therefrom.

BACKGROUND OF THE INVENTION

Field of the invention

A device for automatically maintaining a desired degree of tension on electrical cable as the latter is unbanded from stands of tubing at the time the tubing is intermittently pulled from a well bore, as well as when the cable is rebanded to tubing as it is lowered into the well.

Description of the prior art

During the past few years the use of electrical pumps on the lower ends of oil well tubing strings has greatly increased in popularity. Such pumps are supplied with electrical current by cables that are banded to the tubing string. However, when a tubing string to which a cable is banded is pulled from a well, the tubing is broken up into what is known as "stands," which are stored until needed again, and the cable previously attached thereto stored on a spool, ready for reuse when the tubing is returned to the well.

Heretofore, no portable automatic device has been available for winding the cable at a desired degree of tension on a spool as the cable is intermittently removed in sections from banded positions on a tubing string, for automatically tensioning cable as it is re-banded to tubing as the tubing is lowered into a well bore, and transporting the cable supporting spool to a desired location. The present tensioning device is portable, of relatively simple mechanical structure, and automatically winds electrical cable from a well bore on a spool under a predetermined tension, as well as maintain a desired tension on the cable when it is being re-banded to tubing as the latter is lowered into a well.

SUMMARY OF THE INVENTION

A tensioning device for so rotatably supporting a spool that includes a cylindrical core, two circular walls on the ends of the core, and a tube supported by radially extending arms in the center of the core that electrical cable may be automatically wound on the spool as tubing with which the cable is associated is intermittently raised from a well, which device also serves to tension the cable a predetermined degree as tubing is intermittently returned to a well with the cable banded to the tubing. This device is preferably wheel-supported, and permits a spool of cable to be moved from place to place.

A major object of the present invention is to provide a tensioning device for automatically winding electrical cable on a spool under a predetermined tension as the cable is removed from a banded position on a tubing string, and automatically maintain a desired tension on the cable as it is unwound from the spool.

Another object of the invention is to furnish a wheel-supported frame that may be used to move a spool on which electrical cable is wound, from place to place.

BRIEF DESCRIPTION OF THE DRAWINGS

FIGURE 1 is a perspective view of the oil well electrical cable tensioning device;

FIGURE 2 is a top plan view of the device;

FIGURE 3 is a fragmentary perspective view of the drive shaft for the spool, taken at the location indicated by the arrow shown in FIGURE 2 identified by the numeral **3**;

FIGURE 4 is a combined fragmentary side elevational and vertical cross-sectional view of the device, taken on the line **4—4** of FIGURE 2;

FIGURE 5 is a side elevational view of a portion of the tensioning device in a spool-supporting position;

FIGURE 6 is a vertical, cross-sectional view of the device, taken on the line **6—6** of FIGURE 2;

FIGURE 7 is a fragmentary, vertical, cross-sectional view of the device, taken on the line **7—7** of FIGURE 2;

FIGURE 8 is a side elevational view of the tensioning device in an operative position at a well side adjacent a tubing puller; and

FIGURE 9 is a schematic diagram of the hydraulic system used on the tensioning device.

DESCRIPTION OF THE PREFERRED EMBODIMENT

In FIGURE 8, a string of oil well tubing A having an electrical cable B banded thereto is illustrated as being in a position to be raised from or lowered into an oil well C in which it is normally positioned by a conventional tubing puller D. The cable tensioning device E of the present invention is shown in FIGURE 8 located adjacent the well C. The tensioning device occupies the position shown in FIGURE 8, both when cable B is being wound on or unwound from a spool F rotatably supported thereon.

The spool F is of a type commercially used to supply electrical cable to the trade, and as may be seen in FIGURE 1, the spool includes a hollow cylindrical core **10** having two circular walls **12** affixed to the ends thereof. The spool F further includes a centrally disposed tube **14** situated within the confines of the core **10**, which is supported from the core by a number of circumferentially spaced, radially extending arms **16**. Arms **16** are disposed adjacent the walls **12**, and the outer ends of these arms are rigidly secured to the interior surface of core **10**, with the ends of the arms being affixed to the exterior surface of the tube **14**. Tube **14** is of substantially the same length as that of core **10**.

The tensioning device E includes a frame **18** that is preferably defined by two parallel, transversely spaced tubular side members **20**, the forward ends of which develop into inwardly tapering extensions **22** that merge at a forwardly disposed apex portion **24**. A trailer hitch **26** projects forwardly from the apex **24**, as best shown in FIGURE 1. Two stub shafts **28** extend from the rear end portions of the side members **20**, and these shafts rotatably support pneumatic tired wheels **30**, as also shown in FIGURE 1.

Two uprights **32** are mounted on the rear of side members **20** (FIGURES 1 and 2). Two reinforcing members

34 extend downwardly and forwardly from the uprights 32, with the forward ends of the reinforcing members being secured by welding or other means, to the frame side pieces 20.

The cable tensioning device E, as illustrated in FIGURES 1, 2 and 5, also includes two elongate arms 36 that are preferably fabricated from structural I-beams. Upper and lower parallel flanges 36*a* and 36*b* provided on each arm 36 are connected by a longitudinally extending web 36*c*, as shown in FIGURE 1. Towards the forward end of each arm 36 (FIGURE 1) two transversely aligned, vertically disposed plates 38 are secured to opposite sides thereof. The plates 38 are affixed to the flanges 36*a* and 36*b* by welding or the like, to the longitudinal edges thereof. The plates 38 on each arm 36, as well as the web 36*c* of that arm have transversely aligned bores (not shown) formed therein through which a pin 40 extends. Each of the pins 40 also extends through two elongate, vertically extending supports 42 secured by welding or the like, to opposite upper end portions of one of the uprights 32.

A heavy shaft G is provided as shown in FIGURE 3, that is of such transverse cross section as to rotatably and slidably fit within the tube 14 and project from each end thereof. Two longitudinally spaced, circumferentially extending rings 44 are secured to one end of shaft G, with the distance between these rings being somewhat greater than the width of one of the flanges 36*a*, as shown in FIGURE 3. A first sprocket 46 is rigidly secured to the end of shaft G on which the rings 44 are mounted. Side members 20 (FIGURE 1) are provided with two elongate, longitudinally aligned, rigid plates 48 which project rearwardly therefrom. Each plate 48 pivotally supports a leg 52 by means of a pin 50. A number of spaced openings 54 are formed in each of the plates 48 as shown in FIGURE 1, and any one of these openings is engageable by a pin 56 to hold the leg 52 with which it is associated in a desired downwardly extending angle relative to one of the plates 48, when the pin extends through an opening in the leg 52. Each of the legs 52 is preferably provided with a pad 58 that engages the ground surace 60 as illustrated in FIGURE 5.

A triangular heavy plate 62 is secured to the upper part of the frame, as may be seen in FIGURE 1, and an opening 64 is formed therein, as shown in FIGURE 6. The lower end of an inverted, elongate, cup-shaped housing 66 is welded or otherwise secured to the plate 62, and the interior of the housing is in communication with the opening 64. A pair of lugs 68 are secured to the upper interior portion of housing 66 through which a pin 70 extends, as may be seen in FIGURE 6, to pivotally engage an opening (not shown) formed in a second lug 72 that is secured to the upper end of a hydraulic cylinder 74.

Hydraulic fluid under pressure may be discharged into the upper and lower ends of the hydraulic cylinder 74 through conduits 76 and 78 that extend through openings 76*a* and 78*a* formed in housing 66. A piston (not shown) is slidably movable within cylinder 74 and secured to a piston rod 80 depending from the lower end of the cylinder. The piston rod 80 is secured by a pin 81, or other suitable means, to the upper end of a tubular member 82, on the lower end of which a caster 82*a* is supported, as may best be seen in FIGURE 1. A transverse opening 84 is formed in member 82 that may be brought into alignment with a pair of transverse openings 86 formed in the lower portion of housing 66 (FIGURE 6), and when a pin 88 is extended through the above-mentioned openings, the tubular member 82 is held at such a position relative to the housing that the caster 82*a* is disposed a substantial distance above the ground surface 60, to permit the tensioning device E to be drawn by the hitch 26 behind a suitable power vehicle (not shown).

When the tensioning device E is in a desired location, the pin 88 is removed, and fluid discharged into the hydraulic cylinder 74, as will later be explained in detail, to bring the caster 84 into contact with the ground surface 60, to dispose the frame 18 in a substantially horizontal plane. Thereafter, the pins 56 are inserted through appropriate openings 54 to engage the legs 52, and hold the same in downwardly and rearwardly extending positions as shown in FIGURE 5, where the pads 58 are in direct contact with the ground surface 60.

A lug 87 extends downwardly from each arm 36, as shown in FIGURE 5, through which a pin 88 extends to pivotally engage the upper end of a piston rod 90. Each piston rod 90 is slidably movable in that it is pivotally supported by a pin 94 from one of the plates 48. Each of the piston rods 90, as may be seen in FIGURE 9, is connected to a piston 90*a* that is slidably movable in one of the cylinders 92.

Fluid may be discharged under pressure, by means later to be explained, through conduits 95 that are connected to the lower ends of the cylinders 92 to move the pistons 90*a* and piston rods 90 upwardly, with this upward movement of the rods 90 pivoting the arms 36 from the position shown in phantom line to that shown in solid line in FIGURE 5. When pressure is removed from the fluid in cylinder 92 by valve means to be later described, the weight of the arms 36 will pivot the same downwardly from the position shown in solid line to that shown in phantom line in FIGURE 5, or if the arms are allowed to continue to move downwardly, to a position where the arms rest on the ground surface 60.

Two first stops 96 are rigidly secured to the upper portions of the arms 36, and preferably slightly forwardly from the supporting pins 40, as can best be seen in FIGURES 1 and 5. Two slides 97 are provided that are longitudinally movable on the flanges 36*a* of the arms 36, as best shown in FIGURES 1 and 5, with the slides supporting second stops 98. The slides 97 have vertically positioned bores 97*a* formed therein that may be aligned with any one of a number of longitudinally spaced, vertically extending pairs of bores 100 formed in the flanges 36*a* and 36*b*. Each of the arms 36 is provided with a pin 102 that may be extended through the bore 97*a* at any desired one of a pairs of bores 100.

In FIGURE 1, as well as in FIGURE 5, the slides 97 are shown as being so disposed on the arms 36 that the first and second stops 96 and 98 are positioned adjacent one another. A generally rectangular housing 104 is secured to one of the arms 36, as shown in FIGURE 2, which is provided with a rear open end that may be closed when desired by a pivotally-supported door 106. The structural details of housing 104 may best be seen in FIGURE 7. A hydraulic motor 108 (FIGURE 2) is supported by conventional bracket means (not shown) from the arm 36 most adjacent thereto, and this motor is situated adjacent to the housing 104. Motor 108 drives a geared-down second sprocket 110 as can best be seen in FIGURE 9.

In FIGURES 1, 4 and 5, it will be seen that when the shaft E is extended through the tubing 14 with the shaft resting on the arms 36 between the first and second stops 96 and 98, and the first and second sprockets 46 and 110 in engagement as shown in FIGURE 7, the spool F is rotatably supported on the tensioning device E. A spool driver 112 is shown in FIGURE 4 that includes a body 114 and an insert 116 of hardened teeth which are brought into gripping contact with the shaft G by a chain 118 that is adapted to be tightened, and extends around the shaft to hold the body in non-rotatable contact therewith. The body 114 supports a transversely positioned rod 119 extending between two of the arms 16 of the spool F, with the free end of the rod terminating in a plate 120 to prevent inadvertent displacement of the rod from a driving position between the arms 16. When the second sprocket 110 is driven by the hydraulic motor 108, the first sprocket 46 and the shaft E are concurrently rotated therewith, as is the driver 112. As the driver 112 rotates,

the rod **119** bears against one of the arms **16** of spool F, whereby the spool is driven in a direction to wind the cable B thereon.

The hydraulic system used in conjunction with the tensioning device E is diagrammatically shown in FIGURE 9. A cross piece **122** extends between the forward portions of the frame side members **20** (FIGURE 1), and may be utilized to at least partially support the hydraulic system shown in FIGURE 9, as well as a tool box **124** in which wrenches and various appliances (not shown) used in conjunction with the operation of the tensioning device E may be stored when not in use. The hydraulic system includes a reservoir **126** for hydraulic fluid and a prime mover **128**, preferably in the form of an electric motor, that drives a hydraulic pump **130**. The suction of pump **130** is connected by a conduit **132** to the reservoir **126**. The discharge of pump **130** is connected to a conduit **134** that extends to a check valve **136**, which check valve is connected by a conduit **138** to the inlet of a manually adjustable, pressure-relief valve **140**. Fluid can discharge through the valve **140** and conduit **142** to the hydraulic motor **108** to actuate the same. However, when the pressure on fluid in conduit **142** exceeds a predetermined degree for which the valve **140** is manually set by a control **144**, fluid then discharges from the valve **140** through a by-pass line **146** to the reservoir **126**. After passing through the motor **108**, fluid discharges into the reservoir **126** through a conduit **148**.

Three manually operable hydraulic fluid pumps **150**, **152** and **154** are provided (FIGURE 9) that are actuated by reciprocation of three handles **150***a*, **152***a* and **154***a* which are shown in FIGURE 2. The fluid inlets to the pumps **150**, **152** and **154** are connected by suitable tubing **155** to the reservoir **126**. When it is desired to raise the arms **36** from the position shown in phantom line in FIGURE 5 towards that shown in solid line in the same figure, the two pumps **150** and **152** are concurrently actuated by reciprocation of the handles **150***a* and **152***a* to discharge fluid under pressure through conduits **95** to the lower ends of the hydraulic cylinders **92**. The pistons **90***a* in the hydraulic cylinders **92** are then moved upwardly, together with the piston rods **90**, to pivot the arms **36**, in the manner shown in FIGURE 5, to a position where the arms are substantially horizontal.

When the pump **154** is reciprocated by use of the handle **154***a*, fluid under pressure is discharged from the pump through a conduit **160** to a manually operable, three-way valve **158** to discharge fluid under pressure to either the upper or lower portions of the hydraulic cylinder **74** through the conduits **76** or **78**. As fluid is discharged under pressure through one of the conduits **76** or **78**, fluid discharged from the other end of the cylinder **74** flows through the three-way valve **158** to return to the reservoir **126** through a conduit **162**.

When it is desired to place a spool F on the tensioning device E positioned as shown in FIGURE 1, the device is moved to a location where the arms **36** are disposed between the walls **12**, with the arms extending downwardly, as shown in phantom line in FIGURE 5. The tensioning device E is then maneuvered until the core **10** is in abutting contact with the arms **36**. During this maneuvering, the slides **97** are adjacent the free ends of the arms **36** and prevented from being inadvertently displaced therefrom by lugs **164** secured to the upper part of the rear end portion of the arms. Thereafter handles **150***a* and **152***a* are reciprocated to pivot the arms **36** upwardly from the position shown in phantom line in FIGURE 5 towards the position shown in solid line in the same figure. The second stops **98** on the slides **97** prevent the spool F from rolling from the arms **36** as they pivot upwardly from the position shown in phantom line in FIGURE 5 to that shown in the solid line in the same figure.

After the arms **36** are in the horizontal position shown in FIGURE 5, the spool F may be moved forwardly on the arms due to the shaft G which has previously been inserted in the tube **14** rolling along the upper surfaces of the flanges **36***a*. The shaft G is prevented from moving from a transverse position on the arms **36** by the rings **44** which are disposed on opposite sides of one of the flanges **36***a*. After the spool F has been manually rolled to the position shown in FIGURE 5, the slides **97** are moved to the position also shown in FIGURE 5 and secured in a nonmovable position relative to the arms by means of the pins **102**.

The driver **112** is then secured to the shaft G (FIGURE 4) to engage one of the arms **16** of the spool F and cause rotation thereof as the shaft is rotated. Rotation of the shaft G is, of course, accomplished by engagement of the first sprocket **46** with the second sprocket **110**. The tensioning device E may then be moved to a position such as shown in FIGURE 8 where it may be used to wind the cable B with a desired tension exerted thereon as the cable is unbanded from the tubing A, or used to maintain a predetermined tension on the cable B as it is rebanded on the tubing A as the latter is lowered into the well C.

In using the tensioning device E for its intended purpose, the device is positioned adjacent the well puller D shown in FIGURE 8. The well puller D includes a mast **161** that occupies the upwardly extending position shown in FIGURE 8, and a platform **164** projects outwardly therefrom. A pulley **168** of relatively large diameter is affixed to the lower surface of platform **164**. The pulley **168** may be conveniently carried on the frame **18** in a cradle **170** (FIGURES 1 and 2) mounted on the forward portion thereof. When the tubing A is being pulled from a well or lowered therein, the upper end of the tubing is engaged by a traveling block **172** that is supported by cables **174** from the mast **161**.

Assuming that tubing A is being removed from the well C, as each stand of tubing is drawn from the well, it must be disconnected from that portion of the tubing situated therebelow, and the cable B must be concurrently freed of the bands (not shown) which secure the cable to the tubing. The cable B (FIGURE 8) extends upwardly from the well over the pulley **168** and then downwardly to the spool F to be wound thereon as the same is rotated. The relief valve **140** is adjusted by the handle **144** to discharge fluid at such pressure to the motor **108** that the spool F will tend to rotate faster than the rate at which tubing A is withdrawn from the well to maintain a desired tension on the cable B. The motor **128**, of course, operates continuously, while pulling of the tubing A is intermittent due to interruptions as the stands of tubing are disconnected from the portion of the tubing in the well C situated therebelow. However, as soon as the tubing A is moved upwardly by the traveling block **172**, the pressure on the fluid discharged to the motor **108** is sufficient to automatically cause rotation of the spool F on the tensioning device E in a first direction to wind the cable B on the spool as the cable is freed from the banded position on tubing A.

When tubing A is being run into the well C, the valve **140** is adjusted by use of control handle **144** to reduce the pressure on fluid discharged to the pump **108**. The fluid discharged to the pump **108** at this reduced pressure tends to rotate the spool F in a first direction that is opposite to the second direction in which the spool rotates as cable B is being lowered into the well bore C. As a result of the above-described operation of valve **140**, a desired tension is maintained on the cable B as it is rebanded to tubing A. In other words, the motor **108** tends to rotate the spool F in a direction opposite to that in which it rotates as the cable B is unwound therefrom. The magnitude of the tendency to rotate in an opposite direction is determinative of the tension that will be maintained on the cable B as it is rebanded to tubing A.

When it is desired to remove a spool F from the tensioning device E, the slides **97** are moved to positions

adjacent the lugs **164**, and the arms **36** pivoted downwardly and rearwardly to permit the spool to roll thereon to the ground surface **60** by force of gravity. After the spool F is so disposed on the ground, the shaft G is removed therefrom for future use in supporting a spool on the tensioning device E. The slide **97** on the arm **36** most adjacent the housing **104** has a rod **176** projecting outwardly from the second stop **98** thereon that serves to maintain the door **106** in a closed position when the slides **97** are in the position shown in FIGURE 5.

I claim:

1. In combination with a spool having a cylindrical hollow core and two circular walls on the ends thereof between which electrical cable is wound on said core, a tube longitudinally disposed within said core with a plurality of circumferentially-spaced arms extending radially from said tube to said core, a tensioning device for so rotatably supporting said spool that said spool is automatically rotated in a first direction to permit winding of said cable thereon under a predetermined tension as an oil well tubing string to which said cable is banded is intermittently raised from a bore hole and separated into stands from which said cable is removed for storage on said spool, which device automatically maintains a desired tension on said cable as said stands are intermittently threaded end-to-end and lowered into said bore hole with said cable being unreeled from said spool and banded thereto, said device consisting of:

(a) a shaft of greater length than said tube and disposed therein, with first and second end portions of said shaft projecting from said tube;

(b) a frame;

(c) first means for rotatably supporting said shaft in an elevated position on said frame, with said spool being mounted on said shaft;

(d) second means for rotating said spool concurrently with rotation of said shaft when said shaft is supported by said first means;

(e) a first sprocket mounted on said first end of said shaft;

(f) a second sprocket disposed in a fixed position relative to said frame and which drives said first sprocket when said shaft and spool are in said elevated position;

(g) a hydraulic motor for rotating said second sprocket;

(h) a prime mover located in a fixed position relative to said frame; and

(i) a hydraulic assembly mounted on said frame that includes a fluid reservoir, pump driven by said prime mover, check valve, manually adjustable relief valve, and first conduit means connecting the suction of said pump to said reservoir, the discharge of said pump to said check valve, said check valve to said relief valve, said relief valve to said hydraulic motor, said hydraulic motor to said reservoir, and second conduit means for by-passing fluid from said relief valve to said reservoir when the pressure for which said valve is adjusted is exceeded, with said relief valve when said tubing is raised from said bore hole being adjusted to deliver said fluid to said motor under a first pressure at which said spool tends to rotate in a first direction at a rate faster than the rate at which said tubing is moved upwardly to maintain tension on said cable, with said relief valve when said tubing is being lowered and said spool is rotating in a second direction being adjusted to deliver said fluid to said motor under a second pressure at which said hydraulic motor tends to rotate said spool in said first direction to maintain tension on said cable and act as a brake against rotation of said spool in said second direction.

2. A tensioning device as defined in claim **1** which further includes:

(j) wheel means for movably supportnig said frame to permit said frame, shaft and spool to be moved from one location to another.

3. A tensioning device as defined in claim **2** which further includes:

(k) manually operable means for raising or lowering a portion of said wheel means to dispose at least a part of said frame in a desired plane.

4. A tensioning device as defined in claim **2** which further includes:

(k) hydraulically actuated means for moving said spool and shaft from a first ground-supported position to said elevated position.

5. A tensioning device as defined in claim **1** wherein said first means includes:

(j) two transversely aligned uprights affixed to said frame;

(k) first and second elongate arms pivotally supported at intermediate positions between the ends thereof from the upper ends of said uprights, which arms are transversely-spaced a distance greater than the width of said spool, but less than the length of said shaft so that end portions of said shaft may rest on said arms, with said arms extending forwardly and rearwardly relative to said uprights;

(l) two first stops on the upper forward portions of said arms against which said shaft abuts when said shaft is in said elevated position;

(m) two slides longitudinally movable on said first and second arms, which slides include second stops that project upwardly therefrom;

(n) third means for holding said slides in any one of a plurality of longitudinally-spaced positions on said arms; and

(p) fourth means for concurrently pivoting said arms between horizontal positions and downwardly and rearwardly extending positions, which arms when in said downwardly and rearwardly extending positions, and said slides when adjacent the rear ends thereof, so dispose said second stops for said second stops to engage said shaft and permit said shaft and spool mounted thereon to be raised relative to said frame as said arms are pivoted upwardly to substantially horizontal positions, whereupon said shaft can be rolled forwardly on said arms to place said shaft in abutting contact with said first stops, with said spool then occupying said elevated position, and said shaft being removably held in contact with said first stops by moving said slides longitudinally on said arms until said second stops are in abutting contact with said shaft.

6. A tensioning device as defined in claim **5** which further includes:

(q) two longitudinally-spaced rings on said shaft that are disposed on opposite sides of said first arm and serve as guides to maintain said shaft in a transverse position on said arms as said shaft is rolled longitudinally therealong.

7. In combination with a spool having a cylindrical hollow core and two circular walls on the ends thereof between which electrical cable is wound on said core, a tube longitudinally disposed within said core with a plurality of circumferentially-spaced arms extending radially from said tube to said core, a tensioning device for so rotatably supporting said spool that said spool is automatically rotated in a first direction to permit winding of said cable thereon under a predetermined tension as an oil well tubing string to which said cable is banded is intermittently raised from a bore hole and separated into stands from which said cable is removed for storage on said spool, which device automatically maintains a desired tension on said cable as said stands are intermittently threaded end-to-end and lowered into said bore hole with said cable being unreeled from said spool and banded thereto, said device consisting of:

(a) a shaft slidably and rotatably mounted in said tube and having first and second end portions that project from said tube;

(b) a frame having forward and rear ends;

(c) two parallel, laterally-spaced arms on said frame and extending rearwardly thereon, with the width of the spacing between said arm being greater than the width of said spool but narrower than the length of said shaft;

(d) two transversely-aligned, first stops on the upper portions of said arms;

(e) two slides movably supported on said arms, which slides include second stops that extend upwardly thereform;

(f) first means for adjustably supporting said slides at any one of a plurality of predetermined transverse positions on said arms;

(g) second means for concurrently pivoting said first and second arms between horizontal positions and downwardly and rearwardly extending positions to permit said spool and shaft to be raised and lowered relative to said frame, with said shaft and spool being movable from a first position adjacent said arms to a second position on said arms, the end portions of which shaft when in said second position rest on said arms in abutting contact with said first stops, with said shaft being held in said second position by manually moving said slides on said arms to positions where said second stop abut against end portions of said shaft;

(h) a first sprocket mounted on one end of said shaft;

(i) a second sprocket so disposed relative to one of said arms as to engage said first sprocket when said shaft and spool are in said second position;

(j) third means for connecting said shaft and spool, at least when said shaft and spool are in said second position;

(k) a prime mover mounted on said frame;

(l) a hydraulic assembly mounted on said frame that includes a fluid reservoir, a pump driven by said prime mover, check valve, manually adjustable relief valve, and first conduit means connecting the suction of said pump to said reservoir, the discharge of said pump to said check valve, said check valve to said relief valve, said relief valve to said motor, said motor to said reservoir, and second conduit means for bypassing fluid from said relief valve to said reservoir when the pressure for which said valve is adjusted is exceeded, with said relief valve when said tubing is raised from said bore hole being adjusted to deliver said fluid to said motor under a first pressure at which said spool tends to rotate in a first direction at a rate that is faster than the rate at which said tubing is moved upwardly to maintain tension on said cable, with said relief valve when said tubing is being lowered and said spool is rotating in a second direction being adjusted to deliver said fluid to said motor under a second pressure at which said hydraulic motor tends to rotate said spool in said first direction to maintain tension on said cable and act as a brake against rotation of said spool; and

(o) fourth means for removably holding said slides in a fixed position on said arms where said second stops abut against said shaft when said shaft is in said second position.

8. A tensioning device as defined in claim 7 wherein said second means are hydraulically operated, and said device further includes:

(p) wheel means for movably supporting said frame to permit said frame, shaft and spool to be moved from one location to another.

9. A tensioning device as defined in claim 8 which further includes:

(q) manually operable means for raising or lowering a portion of said wheel means to dispose at least a part of said frame in a desired plane.

References Cited

UNITED STATES PATENTS

3,170,519	2/1965	Haagensen	166—65
3,279,761	10/1966	Schreiber	254—172
3,322,196	5/1967	Bodine	166—65

JAMES A. LEPPINK, *Primary Examiner.*

U.S Cl. X.R.

166—75; 254—172