Sept. 29, 1964 D. W. MATTESON 3,150,911

BINDING POST

Filed June 22, 1961

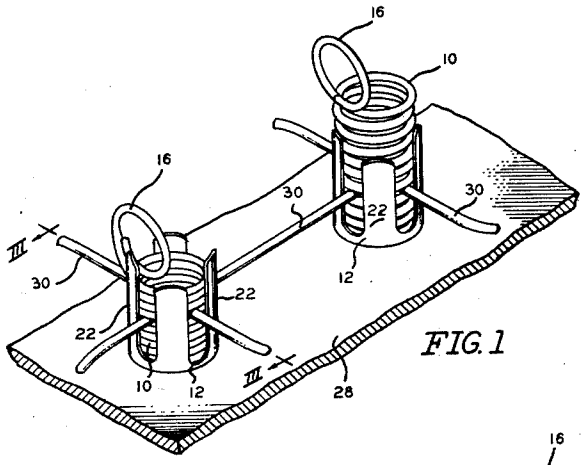

FIG. 1

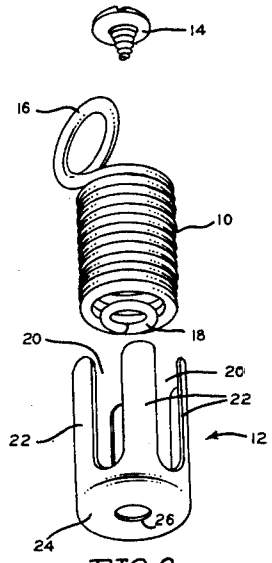

FIG. 2

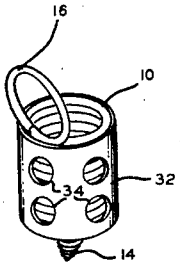

FIG. 4

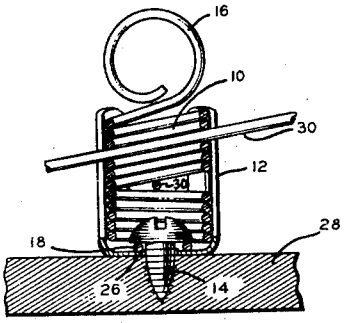

FIG. 3

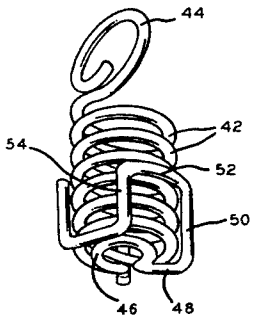

FIG. 6

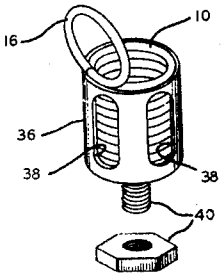

FIG. 5

INVENTOR

DONALD W. MATTESON

BY Beaman & Beaman

ATTORNEY

United States Patent Office 3,150,911 Patented Sept. 29, 1964

3,150,911

BINDING POST

Donald W. Matteson, Jackson, Mich., assignor to Cosmic Voice, Inc., Jackson, Mich., a corporation of Michigan

Filed June 22, 1961, Ser. No. 118,858
4 Claims. (Cl. 339—254)

The invention pertains to the binding post or electrical terminal art and particularly relates to a binding post employing a tension coil spring to facilitate connection between the post and associated conductors.

In the construction and assembling of electrical systems, it is often desired to employ a binding or terminal post to which a single or a plurality of conductors may be easily attached or removed. The need for a simple, economical, easily operable and dependable binding post of this type has recently arisen in the electric and electronic kit art. Educational apparatus dealing with electrical components interconnected by wire conductors require the need of such terminals and the instant invention, though not limited to, is particularly useful in this field.

Coil spring binding posts, wherein a wire is wound in a helical fashion to produce a tension spring and conductors may be interposed between the coils of the spring, are known as shown in U.S. Patent No. 640,479. The invention is directed to an improvement of such binding posts and it is a basic object of the invention to provide a tension coil spring binding post wherein a plurality of conductors may be affixed to a single post in an easily accomplished manner. While the binding post terminal disclosed in Patent No. 640,479 is readily employed with a single conductor, the attachment of a plurality of conductors to a single spring causes difficulty in that the expansion of the spring during the insertion of a conductor often permits the previously attached conductors to disassemble themselves from the coils.

It is therefore an object of the invention to produce a tension spring binding post wherein the spring is axially expanded during assembly with the conductors, yet conductors previously attached to the spring will not become disengaged therefrom upon spring expansion.

Another object of the invention is to provide a binding post of economical, dependable, and readily operable construction which may be readily mounted to conventional mounting surfaces.

These and other objects of the invention arriving from the relationships and details of the components of embodiments of the invention will be apparent from the following description and accompanying drawings wherein:

FIG. 1 is a perspective view of two identical binding posts in accord with the invention, one of the posts being in the operative position and the other post shown as extended during insertion of conductors between the coils thereof,

FIG. 2 is an exploded perspective view of the binding post embodiment of FIG. 1,

FIG. 3 is an elevational sectional view taken along section III—III of FIG. 1, and

FIGS. 4 through 6 are perspective views of other embodiments of the invention.

The components of the embodiment illustrated in FIGS. 1 through 3 may be best appreciated from FIG. 2 and include a tension spring member **10**, a cylindrical, slotted conductor retainer and spring housing member **12**, and the mounting screw **14**. The spring member **10** is identical in the embodiments shown in FIGS. 1 through 5, and consists of a spirally wound wire wherein the coils are in such tension that adjacent coils are normally in closed contiguous relation. The upper coil **16** is preferably deflected upwardly from the general spring configuration to define a handle member which may be gripped by the

operator. The lower coil **18** is preferably formed of a smaller diameter than the other coils and defines a hole which receives the mounting screw **14** whereby the spring and retainer may be mounted, FIG. 3.

The retainer housing **12** is of substantially cylindrical configuration having a plurality of notches or slots **20** defined therein and extending substantially the axial length thereof. The number of slots may vary, four being shown in the illustrated embodiment. The notches **20** are defined by a plurality of upwardly extending finger members **22** and the radially extending base portion **24** of the retainer **12** is provided with a hole **26** through which the mounting screw **14** extends.

The assembly of the components of the invention will be appreciated from FIG. 3 wherein the spring coil **10** is located within the retainer **12** between the fingers **22** and the screw **14**, bearing upon the coil **18**, maintains the assembly of the retainer and spring and affixes the unit to the support **28**.

In operation, when it is desired to attach an electrical conductor or conductors **30** to the spring, the operator grasps the coil **16** and axially expands the spring as shown by the right hand post of FIG. 1. Extension of the spring axially displaces the spring coils permitting a conductor **30**, usually a wire, to be axially inserted between the spring coils. Release of the coil **16** permits the spring to contract and intimately grip the conductor between the adjacent coils. When it is desired to insert additional connectors through the coils of the binding posts, the operator repeats the described operation wherein the conductor will always be inserted into the spring at a location immediate fingers **22**. Thus, each time the spring is extended, conductors which have been previously inserted into the spring will not tend to slip laterally from the confines of the spring due to the retaining influence of the fingers **22**. By using four fingers **22**, conductors may be inserted into the spring at 90° intervals and if more fingers are employed, the possible angular relationships between the coil and conductors may be increased. For optimum results the conductors are preferably inserted completely through the spring that the conductor will engage the spring at two locations.

When it is desired to remove a conductor from the binding post, the operator grasps spring coil **16** and lifts upwardly to expand the spring and by exerting an axial pull on the conductor removes the same from the spring coils. Thus, the spring will maintain an intimate engagement with the conductor whereby a plurality of conductors may be associated with a common spring an efficiently electrically interconnect the conductors. The fingers **22** prevent accidental disengagement of the conductors during expansion of the spring, or due to lateral forces being imposed upon the conductor and permit a single conductor to be disengaged from the spring without effecting the assembly of other conductors with the same spring.

In the embodiment in FIG. 4 the spring **10** is identical to that in the embodiment of FIGS. 1 through 4. However, the conductor retainer member **32** is provided with a plurality of holes **34**, rather than slots and fingers. The holes **34** are preferably formed in diametrically opposed pairs defined in the cylindrical retainer member **32** and, likewise, prevent lateral displacement of the conductors inserted therein relative to the spring axis.

In the embodiment in FIG. 5, the aforedescribed spring member **10** is also employed and the conductor retainer **36** is provided with elongated axially extending slots **38**. In this embodiment the openings **38** are also preferably formed in diametrically opposed pairs to permit the conductor to be extended completely through the spring. In FIG. 5 a machine screw and nut assembly **40** is disclosed in substitution for the wood screw **14**. It will be appreci-

ated that the fastening member extending through spring coil **18** may take any conventional form.

The embodiment of FIG. 6 is directed to a binding post employing the basic principles of the invention wherein the conductor retaining members are formed from the wire defining the spring coil itself. In this embodiment the spring coil and conductor retainer constitute a unitary component. The embodiment of FIG. 6 consists of a wire wound in a tension spring manner to form a plurality of coils **42**. As illustrated, the coils **42** are shown in an expanded position as to receive a conductor therebetween, but normally assume the contiguous relation similar to spring **10**.

The upper coil **44** is bent upwardly to define a handle. At the bottom of the coils **42** a small coil **46** is defined and includes a radially extending portion **48** which is formed in an upward manner at **50** and circumferentially at **52** and downward at **54** and so on about the circumference of the coils **42** to define a coil receiving recess whereby the vertically extending portions **50**, **54**, etc. define a plurality of conductor retaining elements. A screw of other similar fastening member is inserted through coil **46** to mount the binding post of FIG. 6 to a support surface.

It will therefore be appreciated that the invention contemplates a simple and easily manufacturable binding post using a tension spring to maintain an intimate engagement with a conductor, and the use of the axially extending conductor retainers prevent accidental disassembly of the spring coils and conductors and permits a plurality of conductors to be associated with a common post.

It is understood that various embodiments of the invention, other than those illustrated, may be apparent to those skilled in the art, and it is intended that the invention be defined only by the scope of the following claims.

I claim:

1. A binding post comprising, in combination, an elongated cup-like conductor retainer having a longitudinal axis, a first end and an open second end, said retainer including a radially disposed base portion substantially enclosing said retainer first end, said retainer including a wall portion, said wall portion consisting of a plurality of

spaced fingers extending from said base portion, said fingers including free terminating ends defining said open second end of said retainer, an opening defined in said base portion, a tension coil spring defined by contiguous adjacent coils received within said retainer, said coil spring having a first end disposed adjacent said retainer base portion and a second end disposed adjacent said retainer second end, said retainer second end permitting said spring second end to extend therefrom upon extension of said spring, and fastening means adapted to affix said spring first end to said retainer base portion and extend through said base portion opening.

2. In a binding post as in claim 1, wherein a convolution of said spring adjacent said second end thereof is deformed from the general spring configuration to define a handle extending from said second end of said retainer.

3. In a binding post as in claim 1, wherein said fingers are disposed parallel to each other and the longitudinal axis of said retainer, each of said fingers being in opposed diametrical relation to another finger with regard to said longitudinal axis whereby diametrically opposed conductor receiving slots are defined by said fingers.

4. In a binding post as in claim 1 wherein said first end of said spring is defined by a spring coil of reduced diametrical dimension with respect to the other coils of said spring, said fastener extending through said coil of reduced dimension.

References Cited in the file of this patent

UNITED STATES PATENTS

916,435	Gould	Mar. 30, 1909
1,642,695	Pumphery	Sept. 20, 1927
1,776,859	Johnston	Sept. 30, 1930
2,792,560	Bollmeier	May 14, 1957
3,066,274	Ellis	Nov. 27, 1962

FOREIGN PATENTS

223,093	Great Britain	Oct. 16, 1924
294,305	Great Britain	July 26, 1928
58,657	Norway	Nov. 15, 1937
112,291	Switzerland	Oct. 16, 1925