Aug. 17, 1965 S. J. VACEK ETAL 3,201,693

EMERGENCY TRANSMITTER DEVICE

Filed Aug. 20, 1962

Fig. 1

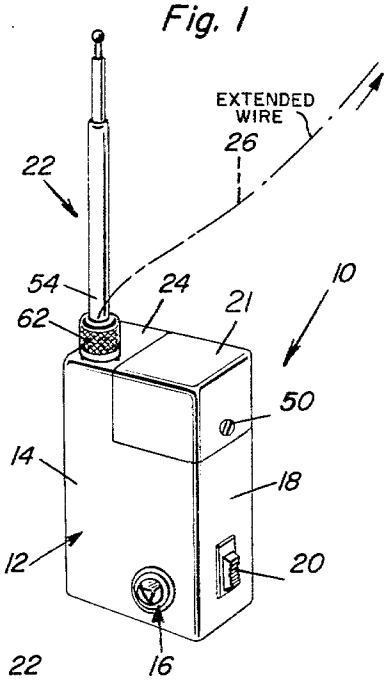

Fig. 3

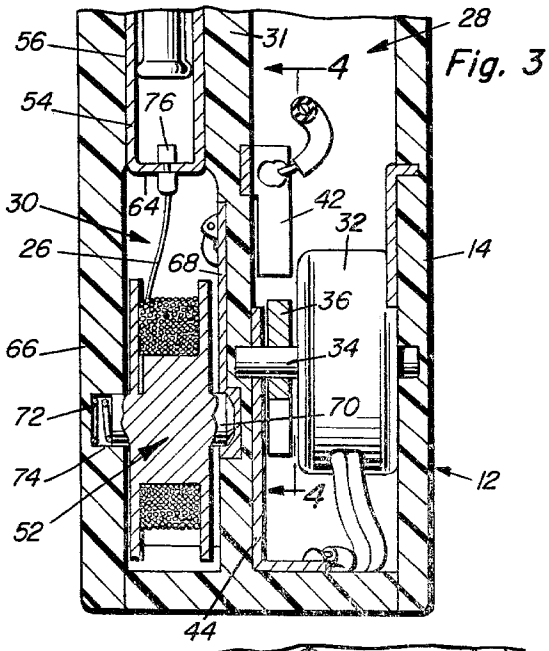

Fig. 2

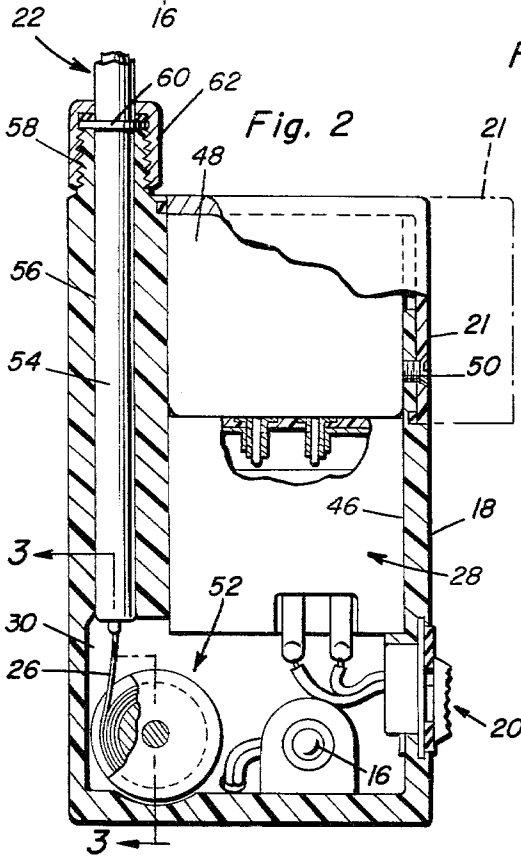

Fig. 4

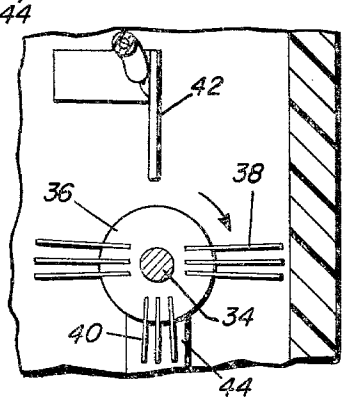

Fig. 5

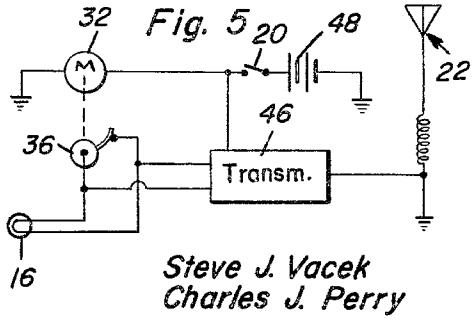

Steve J. Vacek
Charles J. Perry
INVENTORS.

BY Clarence A. O'Brien and Harvey B. Jacobson
Attorneys

United States Patent Office

3,201,693

Patented Aug. 17, 1965

3,201,693

EMERGENCY TRANSMITTER DEVICE

Steve J. Vacek, 220 Holder St., and Charles J. Perry, 1035 Peabody Ave., both of San Antonio, Tex.

Filed Aug. 20, 1962, Ser. No. 217,826
6 Claims. (Cl. 325—119)

This invention relates to an emergency distress signal emitting device particularly useful in connection with the location of marine craft and other similar purposes.

It is therefore a primary object of the persent invention to provide a relatively small, easily operated and economical transmitter device operative to issue a predetermined distress signal.

Another object of the present invention is to provide a small transmitter device construction having an extensible antenna that may be removed for withdrawal of a conductive cable antenna capable of being extended for a substantial distance in order to increase the range of signal radiation from the transmitter.

These together with other objects and advantages which will become subsequently apparent reside in the details of construction and operation as more fully hereinafter described and claimed, reference being had to the accompanying drawing forming a part hereof, wherein like numerals refer to like parts throughout, and in which:

FIGURE 1 is a perspective view of the transmitter device of the present invention;

FIGURE 2 is a partial side elevational view of the transmitter device with the casing broken away and shown in section;

FIGURE 3 is an enlarged partial sectional view taken substantially through a plane indicated by section line 3—3 in FIGURE 2;

FIGURE 4 is a partial sectional view taken substantially through a plane indicated by section line 4—4 in FIGURE 3; and

FIGURE 5 is a simplified circuit diagram of the transmitter device.

Referring now to the drawings in detail it will be observed from FIGURE 1 that the transmitter device generally referred to by reference numeral 10 is mounted within an enclosure or waterproof casing generally referred to by reference numeral 12 made of any suitable material preferably non-conductive, non-porous and capable of being manufactured economically. On one side wall 14 of the casing a signal lamp or light 16 may be exposed while on a side wall 18 perpendicular to the side wall 14, an on-off switch device 20 may be mounted. Also, the casing 12 may be provided with a removable section 21 through which a battery may be inserted or replaced constituting the source of energy for the transmitter device. A telescoping antenna device 22 projects upwardly from the top portion 24 of the casing 12 and may be disassembled therefrom so that a flexible antenna cable 26 may be withdrawn therefrom as shown by dotted lines in FIGURE 1, extension of the cable 26 being thereby effective to extend the range of transmitter radiation. Accordingly, when withdrawn from the casing, the cable may be attached to any device for elevating it such as a balloon.

Referring now to FIGURES 2 and 3 in particular, it will be observed that two chambers are formed within the casing 12 including a battery and circuit compartment containing the signal energy generating means separated from an antenna compartment 30 by means of a partition wall 31. Mounted within the compartment 28 adjacent the lower end thereof, is a small fractional horsepower motor 32 having a motor shaft 34 journaled between the wall 14 and the partition wall 32. A mounting bracket 36 is secured to the wall 14 for stationary mounting of the motor casing with respect to the housing 12. Mounted on the motor shaft 34 between the motor casing and the partition wall 32 is a code wheel 36 as more clearly seen in FIGURE 4. The code wheel has mounted thereon in angularly spaced relation three groups of yieldable contact elements two of the groups of flexible contact elements including closely spaced elements 38 which are relatively long as compared to the shorter element 40 of a third group. The flexible contact elements cooperate with a single rigid contact element 42 securely mounted on the partition wall 32 so that in response to rotation of the code wheel 36 a distress signal may be produced by three long contact intervals closely spaced apart followed by a pause and then three closely spaced short contact intervals followed by a second pause after which the three long contact intervals are repeated, the foregoing sequence occurring during 180 degrees of rotation of the code wheel and being repeated once each revolution of the code wheel so as to produce thereby the Morse code distress signal, S O S. It will, of course, be appreciated that other coding arrangements may be utilized pursuant to the foregoing principles. It will also be observed that electrical conductors are connected to code wheel by the bracket 44 through which the motor shaft 34 is journaled, it being appreciated, of course, that the motor shaft and the code wheel are also made of conductive material so as to establish a conductive path between the flexible contact elements 38 or 40 and the fixed contact element 42 to which an electrical conductor is also connected.

Mounted within the compartment 28 above the motor 32, is a transistorized transmitter circuit component generally referred to by reference numeral 46 to which the motor 32, terminal bracket 44 and fixed contact element 42 are electrically connected. Also electrically connected through the circuit component 46 is the lamp device 16 arranged to be connected in parallel with the coded signal switch arrangement between the code wheel and the fixed contact element 42. In this manner a blinking light may be provided indicating the operating condition of the transmitter. Also connected to the circuit component 46 as more clearly seen in FIGURE 2, is the on-off switch assembly 20. Power for energizing the circuit component 46 and the motor 32 is derived from a battery generally referred to by reference numeral 48 mounted on top of the circuit component 46 and plugged thereinto. The section 21 held on the casing by the fastener 50 may therefore be readily removed so as to withdraw the battery 48 for replacement purposes. The output from the transmitter circuit component 46 is therefore connected to the antenna device 22 through a conductive cable 26 and a cable reel mechanism generally referred to by reference numeral 52 which is rotatably mounted in the antenna compartment 30 at a lower end thereof.

Referring once again to FIGURES 2 and 3, it will be ovserved that the antenna device 22 is provided with a tubular holder 54 which is slidably mounted within a bore 56 formed within the casing above the antenna compartment 30. The casing is formed with an upwardly projecting threaded portion 58 through which the holder 54 extends. Formed intermediate the ends of the holder 54 is a flange 60 adapted to be engaged by the internally threaded assembly nut 62 for holding the holder 54 in assembled position within the casing. Conductively connected in any suitable manner to the lower end 64 of the holder 54, is the end of the conductive cable 26 adapted to be wound upon the cable reel device 52 and by means of which a conductive path is established from the transmitter output to the antenna device.

The cable storage reel device **52** is journaled between the partition member **32** and a back wall **66** of the casing **12**. Accordingly, a conductive terminal bearing bracket **68** to which an electrical conductor is connected from the circuit component, journals a tapered stub shaft portion **70** of the reel **52** which is made of conductive material. A spring element **72** seated within a recess **74** in the wall **66** is therefore provided in order to apply axial pressure on the reel **52** so as to both retard rotation thereof and maintain electrical contact between the reel and the terminal bracket **68** within which it is journaled. Accordingly, the end of the conductive cable **26** opposite the connected end **76** is conductively anchored to the reel device **52**. The transmitter device may therefore be operated either with the telescoping antenna device as shown in FIGURE 1 or the assembly nut **62** removed and the antenna holder **54** withdrawn pulling the cable **26** therewith so that it may be then disconnected from the antenna device and anchored to some elevating device as hereinbefore mentioned.

Referring therefore to FIGURE 5, operation of the transmitter device will become apparent. It will therefore be noted that the battery source of power **48** is operative upon closing of the on-off switch **20** to supply energizing power for the motor **32** by means of which the code wheel **36** is continuously rotated to intermittently open and close a circuit through the transmitter circuit component **46** to thereby radiate a distress signal from the antenna device **22**. Connected in parallel with the signal switch arrangement is the indicator lamp **16**. It will therefore be appreciated that the transmitter device of the present invention because of the novel arrangement of parts and the economy of manufacture inherent therein will make available an inexpensive emergency distress signal device which may be widely distributed, for example, among small marine craft owners and other persons who may find themselves in situations that call for the dispatch of emergency distress radio signals.

The foregoing is considered as illustrative only of the principles of the invention. Further, since numerous modifications and changes will readily occur to those skilled in the art, it is not desired to limit the invention to the exact construction and operation shown and described, and accordingly all suitable modifications and equivalents may be resorted to, failing within the scope of the invention as claimed.

What is claimed as new is as follows:

1. A distress signal emitting device for emergency use comprising, a compartmented enclosure including an exposable battery and circuit compartment, and an antenna compartment, said compartments having a partition wall therebetween, rotatable means mounted by said partition wall in both compartments, displaceable antenna means mounted in said antenna compartment for varying the effective range of signal radiation, battery-powered transmitter circuit means mounted in the battery and circuit compartment, said rotatable means comprising a code wheel mounted within one of said compartments and cable reel means mounted in the other of said compartments, a conductive cable connecting said reel means to the antenna means within said antenna compartment, signal producing switch means operatively actuated by the code wheel, said reel means and switch means being electrically connected to the circuit means for producing and radiating a distress signal, and motor means drivingly connected to said code wheel and electrically connected to said battery-powered circuit means for energization thereof, said signal producing switch means comprising a single rigid contact element and a plurality of spaced flexible contact elements of different lengths, said contact elements being fixedly mounted on the partition wall and the code wheel for squential contact with each other for prolonged and short contact intervals in response to rotation of the code wheel.

2. The combination of claim **1** wherein said antenna means comprises a telescoping antenna assembly, a tubular holder for said assembly removably mounted in said antenna compartment from which the assembly is extensible, said conductive cable being removably anchored to a lower end of the tubular holder for withdrawal therewith from the enclosure.

3. A distress signal emitting device for emergency use comprising a compartmented enclosure including an exposable battery and circuit compartment and an antenna compartment, said compartments having a partition wall therebetween, rotatable means mounted by said partition wall in both compartments, displaceable antenna means mounted in said antenna compartment for varying the effective range of signal radiation, battery-powered transmitter circuit means mounted in the battery and circuit compartment, means electrically connecting the rotatable means to the circuit means and antenna means for transmitting signal energy to the antenna means, said rotatable means including a code wheel mounted within one of said compartments and cable reel means mounted in the other of said compartments, and lamp indicating means connected to said circuit means and mounted on the enclosure for indicating transmission of signal energy to the antenna means.

4. A distress signal emitting device for emergency use comprising, a compartmented enclosure including an exposable battery and circuit compartment and an antenna compartment, said compartments having a partition wall therebetween, rotatable means mounted by said partition wall in both compartments, displaceable antenna means mounted in said antenna compartment for varying the effective range of signal radiation, battery-powered transmitter circuit means mounted in the battery and circuit compartment, means electrically connecting the rotatable means to the circuit means and antenna means for transmitting signal energy to the antenna means, said rotatable means including a code wheel mounted within one of said compartments and cable reel means mounted in the other of said compartments, said antenna means comprising a telescoping antenna assembly, a tubular holder for said assembly removably mounted in said antenna compartment from which the assembly is extensible, and a conductive cable removably anchored to a lower end of the tubular holder for withdrawal therewith from the enclosure said conductive cable being wound upon the reel means and electrically connected to the circuit means.

5. A distress signal emitting device for emergency use comprising, a compartmented enclosure including an exposable battery and circuit compartment and an antenna compartment, said compartments having a partition wall therebetween, rotatable means mounted by said partition wall in both compartments, displaceable antenna means mounted in said antenna compartment for varying effective range of signal radiation, battery-powered transmitter circuit means mounted in the battery and circuit compartment, means electrically connecting the rotatable means to the circuit means and antenna means for transmitting signal energy to the antenna means, said rotatable means including a code wheel mounted within one of said compartments and cable reel means mounted in the other of said compartments, said signal producing switch means comprising a single rigid contact element and a plurality of spaced flexible contact elements of different lengths, said contact elements being fixedly mounted on the partition wall and the code wheel for sequential contact with each other for prolonged and short contact intervals in response to rotation of the code wheel.

6. A distress signal emitting device comprising, a nonconductive housing, a partition wall formed within the housing to define an antenna compartment and a signal generating compartment on opposite sides thereof, a tubular holder removably mounted in the antenna com-

partment, an extensible antenna slidably mounted in the holder for extension from the housing, a storage reel, a conductive bearing member mounted on the partition wall rotatably journaling the reel within the antenna compartment, an antenna cable connected to said holder and wound upon said reel, a motor mounted within the signal generating compartment, a code wheel driven by said motor having a plurality of flexible contact elements mounted thereon, a rigid contact mounted on the partition wall for intermittent engagement by said flexible contact elements in response to rotation of the code wheel, a transmitter circuit mounted in the signal generating compartment and electrically connected to the rigid contact and the code wheel, a battery mounted in said housing, switch means mounted by the housing electrically connecting the battery to the circuit and the motor

for simultaneous energization thereof, and an indicator lamp mounted by the housing and connected to the circuit for indicating the operating condition thereof, said housing being provided with a removable section for exposing the battery within the signal generating compartment.

References Cited by the Examiner

UNITED STATES PATENTS

214,944	4/79	Neely	340—309
2,825,803	3/58	Newbrough	325—112
2,936,368	5/60	Andre	325—352
3,061,719	10/62	Shattuck	325—116
3,087,117	4/63	Mitchell	343—702
3,102,982	9/63	Stypulkowski	325—105

DAVID G. REDINBAUGH, *Primary Examiner.*