Feb. 6, 1934. J. O. LAMBO 1,946,427

TUFT PILE FABRIC LOOM

Filed June 16, 1932 2 Sheets-Sheet 1

Fig. 1

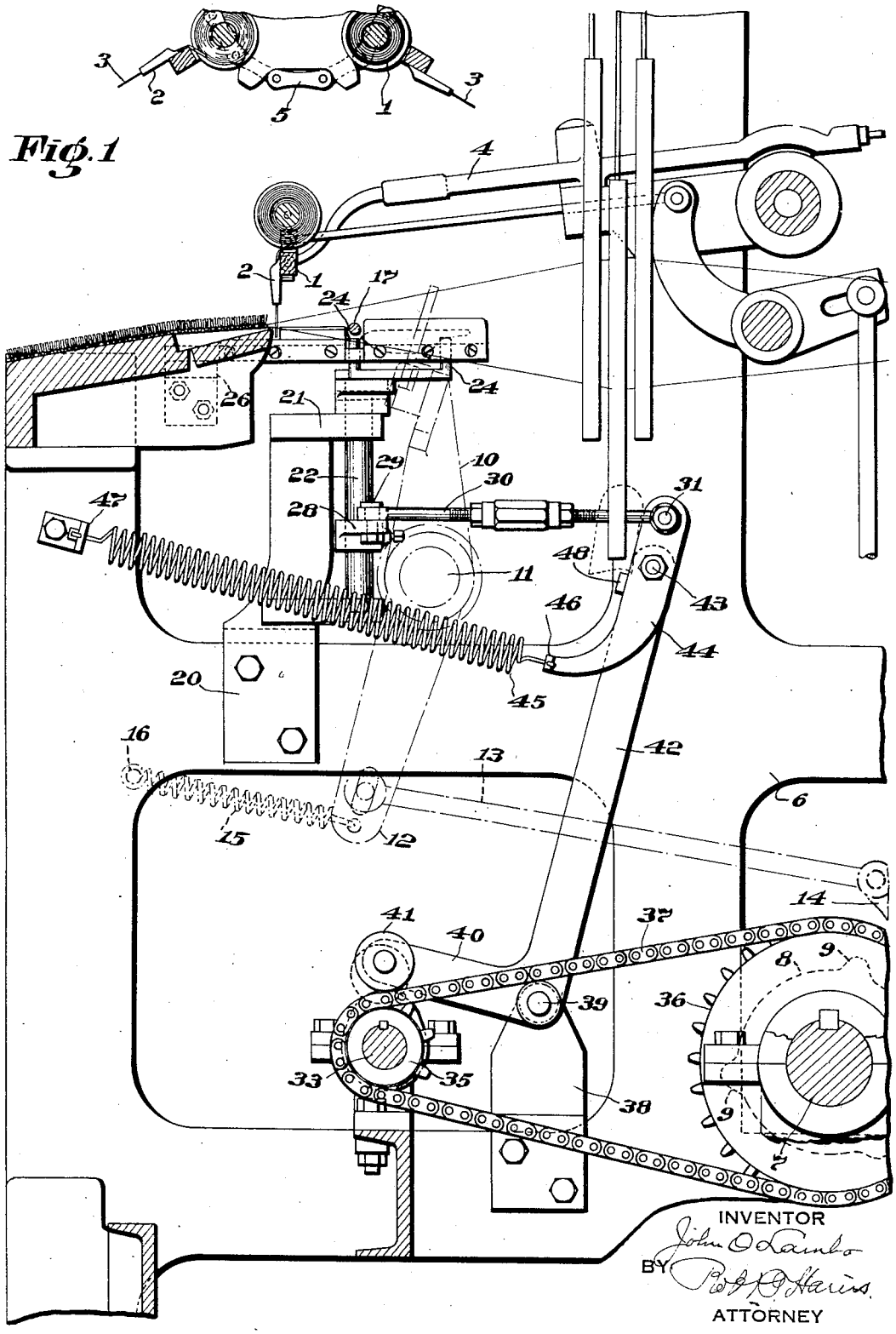

INVENTOR
John O. Lambo
BY Robt. O. Harris
ATTORNEY

Feb. 6, 1934. J. O. LAMBO 1,946,427

TUFT PILE FABRIC LOOM

Filed June 16, 1932 2 Sheets-Sheet 2

Fig. 2

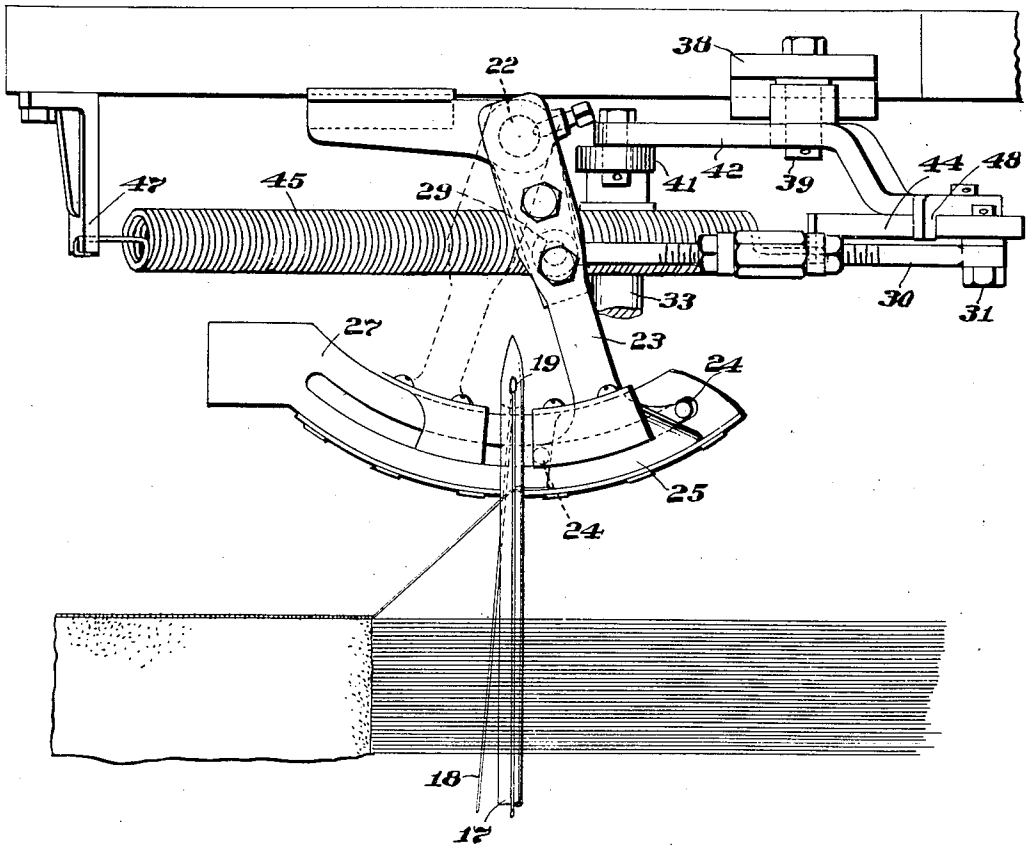

Fig. 3

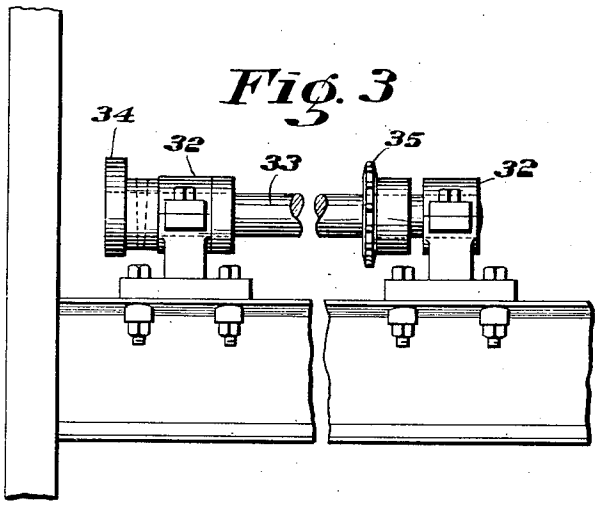

Fig. 4

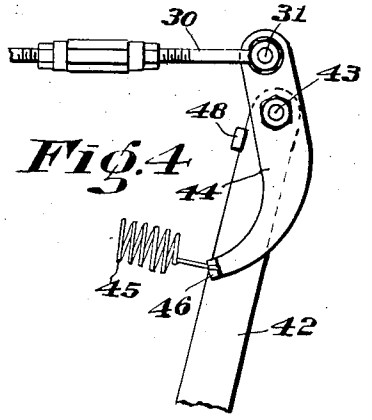

INVENTOR
John O. Lambo
BY
Robt G. Harris
ATTORNEY

Patented Feb. 6, 1934 1,946,427

UNITED STATES PATENT OFFICE

1,946,427

TUFT PILE FABRIC LOOM

John O. Lambo, Amsterdam, N. Y., assignor to Bigelow-Sanford Carpet Co., Inc., Thompsonville, Conn., a corporation of Massachusetts

Application June 16, 1932. Serial No. 617,581

6 Claims. (Cl. 139—124)

This invention relates to pile fabric looms and is more particularly directed to the selvage shuttle operating mechanism.

Tuft pile fabric looms, of which the Axminster loom is a type, provide for the presentation of the pile forming yarns to the weaving point from an extraneous supply and a weft inserting needle carries the weft threads through the shed for binding the pile forming tufts to the foundation fabric. Looms of the Axminster type are likewise provided with a selvage shuttle which serves to interloop a selvage cord or thread with the needle thread when the needle has been inserted through the shed.

Under the above conditions a longer period of time is required to insert a row of tuft yarns and a holding weft shot, than is required to merely insert a weft shot and it is, therefore, customary to operate such Axminster looms with an uneven lay movement to provide the necessary time intervals required, and in order to impart the necessary movements to the selvage shuttle it has been the custom to operate the selvage shuttle from a plurality of cams.

In the patent granted to Joseph A. Coyle, No. 1,825,110, dated September 29, 1931, an Axminster loom having the usual uneven lay beat-up movement was provided with a weft inserting needle which was operated continuously with an even beat or period even though the other operating elements of the loom were arranged to function at unequal intervals or beats.

One of the objects of the present invention is to provide a selvage shuttle operating mechanism wherein a more uniform selvage may be formed and a smoother running operation be imparted to the shuttle, with the result that selvage cord breakage and consequent liability of production of imperfect fabric are avoided.

In accordance with the present invention the selvage shuttle or shuttles, as the case may be, is or are given their interlooping movement with the needle thread by a single cam instead of a multiplicity of cams, as heretofore. This characteristic operation of the selvage shuttle or shuttles lends itself advantageously to the uniform needle motion, as shown and described in the Coyle patent hereinbefore mentioned, by reason of the fact that since the needle has a uniform period of movements the selvage shuttle may likewise have imparted thereto regular and uniform movements throughout the weaving operation in correspondence with the even periods or intervals of the needle motion.

Another feature of the present invention consists in providing a safety device in the train of mechanism for operating the selvage shuttle or shuttles, such that should the movement of the shuttle or shuttles be obstructed in either direction the safety device will prevent breakage of the component parts of the mechanism.

The invention and novel features thereof will best be made clear from the following description and accompanying drawings of one form or embodiment thereof.

In the drawings:—

Fig. 1 is a sectional side elevation of sufficient portions of an Axminster loom to show the association of the invention therewith;

Fig. 2 is an enlarged plan view showing the relation of the needle and selvage shuttle as the latter interloops the selvage cord with the needle thread;

Fig. 3 is an enlarged detail showing the selvage shuttle cam shaft and cam; and

Fig. 4 is an enlarged detail showing the safety device in position and its yielding character when the shuttle is obstructed in its movement in either direction.

In looms of the Axminster type such as shown, the pile forming yarns are supplied from an extraneous source and are presented to the weaving point and, as shown in the present instance of the invention, the pile forming yarns are supported by tube frames 1, each of which has a tube 2 through which the pile forming yarn 3 extends and a transferrer 4 serves to carry a tube frame from the usual chains 5 to present the pile forming yarn to the weaving point.

It will not be necessary to further describe the tube frames and the means for presenting the pile forming yarns to the weaving point, because the details thereof form no essential part of the present invention and are well understood by those skilled in the art.

Mounted on the loom frame 6 is the main cam shaft 7 having a cam 8 affixed thereto and the cam 8 is provided with risers 9 which are disposed about the cam 8, as more clearly described in the Coyle patent, to impart to the lay its uneven beat movements.

The lay 10 is supported for rocking movement at 11 and the lower end portion 12 thereof is connected by a rod 13 to a lever 14, which is held in contact with the cam 8 by a spring 15, one end of which is connected at 16 to a fixed part and the other end connected to the lower end portion of the lay, as indicated. These parts may all be substantial, as more fully shown and described in the Coyle patent above mentioned, and

operate to impart to the lay 10 its uneven beat movements. The weft inserting needle 17 having the weft thread 18 passing through its eye 19 may likewise be the same, as more fully and completely described in the Coyle patent, so that the weft needle will have its inserting and withdrawing movements at even intervals or periods. It has not been deemed necessary to show and describe the mechanism for the weft inserting needle since that is fully and completely described in the Coyle patent.

Rising from the loom frame 6 is a bracket 20 having suitable bearing portions 21 for the upright shaft 22 which is provided with the usual operating arm 23 having the shuttle actuating pins 24 to engage the selvage shuttle 25, all of which is now common in selvage shuttle mechanisms.

Secured to the loom frame is a bracket 26 which serves to support the shuttle race 27 in which the shuttle 25 has its arcuate movement.

Extending from the upright shaft 22 is an arm 28 which is connected at 29 to a link or rod 30 and the other end of the link or rod 30 is connected at 31 to the safety device, as will more fully appear.

Mounted in suitable bearings 32, Fig. 3, is the selvage shuttle cam shaft 33 provided with a cam 34 having a single riser and secured to the selvage shuttle cam shaft is the sprocket 35 which receives a rotary movement in a predetermined ratio from the cam shaft.

In the present instance of the invention the main cam shaft is provided with the sprocket 36 and between the sprockets 35 and 36 is the operating sprocket chain 37, so that the selvage shuttle cam shaft and cam are driven from the main cam shaft at an increased speed.

In the present instance of the invention the Axminster fabric to be produced is of the three shot type and consequently the ratio of movement between the main cam shaft and the selvage shuttle cam shaft is made three-to-one so that on each rotation of the main cam shaft the selvage shuttle cam shaft rotates three times as, of course, also does the selvage shuttle operating cam 34.

The ratio of movement of the main cam shaft and selvage shuttle cam shaft, while shown in the present instance as being three-to-one, may be otherwise proportioned in accordance with the number of shots introduced into the fabric being woven on each cycle of operations.

Secured to the loom frame is a bracket 38 to which is pivoted at 39 the actuating lever for the selvage shuttle or shuttles and as shown the actuating lever has one arm 40 carrying a roller 41 which rests upon the periphery of the shuttle actuating cam 34 while the other arm 42 of the lever extends upwardly, as indicated in Fig. 1.

Pivotally mounted on the arm 42 of the actuating lever at 43 is a safety member 44 to the upper end of which is connected at 31 the rod or link 30, as hereinbefore described and to the lower end of the safety member the spring 45 is connected at 46, while the opposite end of the spring is connected at 47 to a fixed point, the result being that the safety member 44 is normally under the influence of the spring 45 and to prevent undue movement of the safety member and maintain it and the actuating lever in normal running condition a stop 48 is provided on the actuating lever.

The construction is such that during normal weaving operations when the selvage shuttle or shuttles is or are actuated without obstruction the safety member 44 and actuating lever remain in the position indicated in Fig. 1.

When, however, the selvage shuttle or shuttles is or are obstructed in their movements as the roller 41 passes over the riser of the selvage shuttle operating cam the spring 45 will yield, as indicated in Fig. 4, thereby avoiding any breakage of the component parts of the train of mechanism between the actuating cam and shuttle or shuttles. In other words, when the actuating lever has its arm 42 moved to the right, Fig. 4, and the obstruction to the selvage shuttle or shuttles prevents movement thereof responsive to the actuating mechanism, the safety member 44 will turn about its pivotal connection 43 under the yielding action of the spring 45, thereby avoiding breakage. Should an obstruction to a selvage shuttle be manifest on the reverse movement the yielding end of the spring 45 will manifest itself and permit the actuating parts to come to rest without breakage of the parts.

From the construction described, as one good embodiment of the present invention, it will be apparent that a selvage shuttle for interlooping a selvage cord with the needle thread will have uniform and even movements in both directions due to the single actuating cam 34 and since the weft inserting needle has likewise even periods of movement the cooperation of the selvage shuttle and needle serves to unerringly interloop the selvage cord and needle thread for the production of uniform and even selvage.

What is claimed is:—

1. In a loom for weaving pile fabrics, the combination of a needle for introducing weft threads into the shed, a selvage shuttle for interlooping a selvage cord or thread with the needle thread, a selvage shuttle cam, an arm mounted for oscillating movement by the cam, a safety device comprising a lever pivotally mounted on the arm, a link connecting one part of said lever with the selvage shuttle, and a spring acting through another part of said lever to maintain said arm in operative engagement with the selvage shuttle cam and yieldable when the selvage shuttle is obstructed in its movements to permit said lever to yield.

2. In a loom for weaving Axminster fabrics, the combination of means for presenting pile forming tuft yarns to the weaving point, a needle for introducing weft threads into the shed, a selvage shuttle, a single cam for operating the selvage shuttle, an arm actuated by the cam on each revolution thereof for operating the selvage shuttle, and a safety device comprising a lever pivotally mounted on the arm, a link connecting one end of the lever to the selvage shuttle, and a contractile spring connected to the other end of said lever and yieldable to permit relative movement of said lever and arm when the selvage shuttle is obstructed.

3. In a loom for weaving Axminster fabrics, the combination of means for presenting pile forming tuft yarns to the weaving point, a needle for introducing weft threads into the shed, a selvage shuttel, a single cam for operating the selvage shuttle, an arm actuated by the cam on each revolution thereof for operating the selvage shuttle, and a safety device comprising a pivoted member connected to said arm and yielding means normally acting to hold said member in operative position with respect to said arm and yieldable when the selvage shuttle is obstructed in its movement in either direction to prevent breakage of parts.

4. In a loom for weaving tuft pile fabrics, the combination of means for presenting pile forming tuft yarns to the weaving point, a needle for introducing weft threads into the shed, a selvage shuttle, a selvage shuttle operating cam, a pivotally mounted arm actuated by said cam, a safety member pivotally mounted on the arm and connected at one side of its pivot with the selvage shuttle, and a spring connected to the safety member at the other side of said pivot to yield should the selvage shuttle be obstructed in its movement.

5. In a loom for weaving tuft pile fabrics, the combination of means for presenting pile forming tuft yarns to the weaving point, a needle for introducing weft threads into the shed, a selvage shuttle, a selvage shuttle operating cam, a pivotally mounted arm actuated by said cam, a safety member pivotally mounted on the arm and connected at one side of its pivot with the selvage shuttle, and a spring connected to the safety member at the other side of said pivot to yield should the selvage shuttle be obstructed in its movement, and a stop for limiting the pivotal movement of the safety member under the stress of the spring.

6. In a loom for weaving tuft pile fabrics, the combination of means for presenting pile forming yarns to the weaving point, the lay, a main cam shaft having a cam for imparting unequal time beats to the lay, a needle for introducing weft threads into the shed at equal intervals, a selvage shuttle for interlooping a selvage cord with the needle thread, a selvage shuttle cam shaft, a single cam thereon for operating the selvage shuttle at equal intervals or periods, a sprocket on the selvage shuttle cam shaft, a sprocket on the main cam shaft, a sprocket chain connecting the two sprockets for imparting rotary movements to the selvage shuttle cam in predetermined ratio to the rotary movements of the main cam.

JOHN O. LAMBO.