(No Model.)

C. R. & M. E. SUMMERS.

FENCE WIRE STRETCHER.

No. 348,248. Patented Aug. 31, 1886.

Fig. 1.

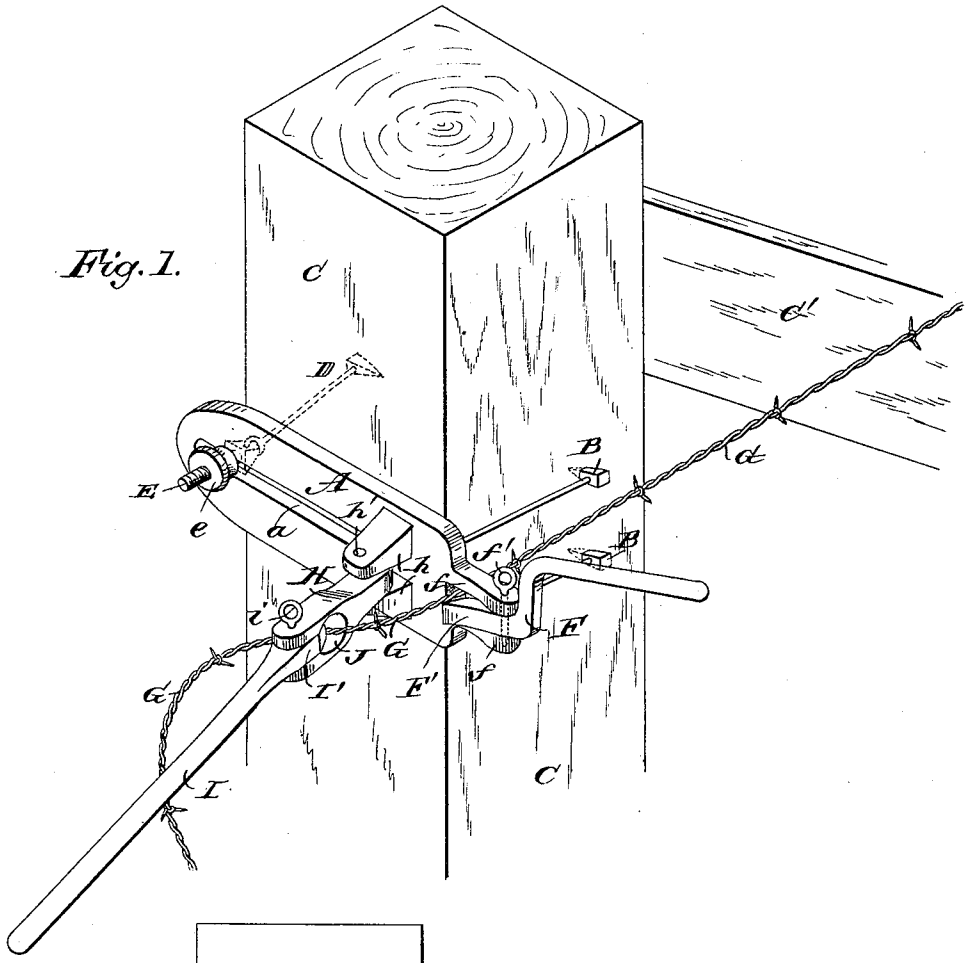

Fig. 2.

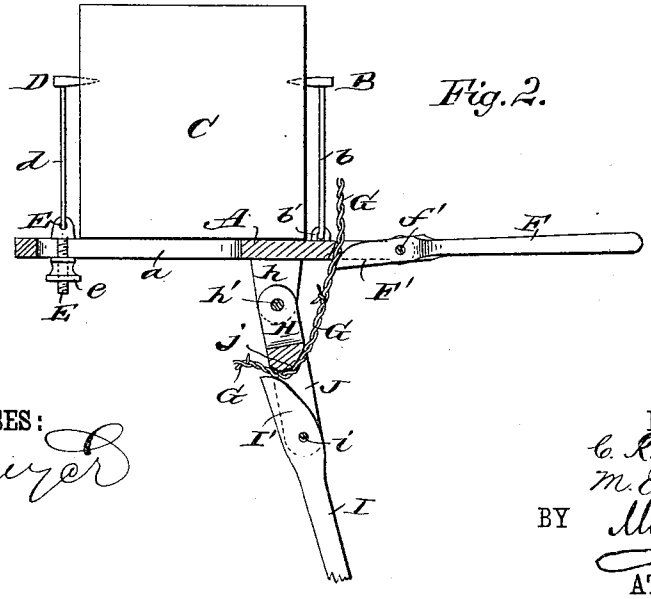

WITNESSES:

Thos. Berger

C. Sedgwick

INVENTOR:

C. R. Summers

M. E. Summers

BY Munn & Co

ATTORNEYS.

N. PETERS, Photo-Lithographer, Washington, D. C.

UNITED STATES PATENT OFFICE.

CLIFTON R. SUMMERS AND MARSHAL E. SUMMERS, OF STANBERRY, MO.

FENCE-WIRE STRETCHER.

SPECIFICATION forming part of Letters Patent No. 348,243, dated August 31, 1886.

Application filed September 4, 1885. Serial No. 176,170. (No model.)

To all whom it may concern:

Be it known that we, CLIFTON R. SUMMERS and MARSHAL E. SUMMERS, both of Stanberry, in the county of Gentry and State of Missouri, have invented a new and Improved Fence-Wire Stretcher, of which the following is a full, clear, and exact description.

Our invention relates to implements for stretching barbed or plain wires or ribbons to fence-posts prior to fastening them to the posts, and has for its object to facilitate this operation by providing a simple, cheap, effective, and easily-handled device for the purpose.

The invention consists in certain novel features of construction and combinations of parts of the fence-wire stretcher, all as hereinafter fully described and claimed.

Reference is to be had to the accompanying drawings, forming part of this specification, in which similar letters of reference indicate corresponding parts in both the figures.

Figure 1 is a perspective view of our improved wire-stretcher as applied to use. Fig. 2 is a sectional plan view thereof with the main lever partly broken away.

The letter A indicates the main plate of the wire-stretcher, which plate is made of metal, and at its rear face next the end to which the levers are attached the plate is provided with staples or eyes, as at *b'*, to which are connected by loops or eyes at their back ends the stems *b* of the dogs B, two in number, which are to be driven into one face of the fence-post C. A dog, D, connected by its stem *d* with the head of screw-bolt E, passing through a slot, *a*, of the main plate A, is to be driven into the opposite face of the post to hold the stretcher to the post, said bolt E having a nut, *e*, on it which may be tightened on the plate A to hold the dog D at any desired distance from the dogs B, to accommodate the thickness of the post. At one end the plate A is provided with lugs *f f*, between which, on a loose pin or key, *f'*, a lever, F, is fulcrumed, the short arm or jaw F' of which is adapted to clamp the fence-wire G between it and the base of the recess between the lugs *f f*, and at the outer face of the plate A it is provided with opposite lugs, *h h*, between which, on a pin, *h'*, is pivoted the inner end of a lever-arm, H.

In the forked outer end of the lever H is pivoted, on a pin, *i*, the lever I, the short arm or jaw I' of which is adapted to clamp the fence-wire G between it and the base *j* of the recess J, in which the jaw I' works. The long arm or handle of the lever F is bent upward and outward, so as to be out of the way of the lever I when the latter is thrown forward to take a new hold of the wire.

At C' is shown a brace, which stiffens the fence-post C against the pull of the wire-stretcher.

The operation is as follows: When the screw-bolt E is adjusted in the main-plate slot *a*, so as to be at the proper distance from the eyes *b'*, the dogs B D will be driven into the post to hold the entire wire-stretcher to it, and so that the wire G may, when the levers F I and their pins *f' i* are removed, be passed between the lugs *f f* of plate A, and into the recess J of the lever H. The levers F I then will be fulcrumed respectively to the plate A and lever H again, and the compound lever H I will be swung forward as closely as may be to the open jaw F' of lever F, and the lever H I then will be drawn backward by a pull on the main lever I, which first will close its jaw I' powerfully on the wire G and then the whole lever H I will swing around on the pivot-pin *h'* as the wire G is drawn up past the jaw F' of lever F, and when the lever H I receives its full backward movement the lever F will be operated to clamp the wire G and hold it until the lever H I can be loosened from the wire and swung forward toward the lever F and again be clamped to the now partly stretched wire, whereupon the lever F is loosened from the wire and the lever H I is again drawn backward, and these alternate gripping and stretching operations will be performed until the wire is drawn up tightly and directly at the faces of the posts, to which it may then be fixed by staples or otherwise in any approved way. The faces of the levers and main plate A, between which the wire is gripped, are roughened or serrated to insure a firm hold of the wire.

It is evident that the stretcher may be fastened to a fence-post of any shape, as it only is necessary to flatten one face of the post for the plate A to rest against, which may very quickly be done with an ax. Furthermore, the wire-strectcher is very simple in construc-

tion, and may be made at low cost, and is very effective in use.

Instead of the staples *b'*, eyebolts swiveled to the plate A may be used to connect the stems *b* of the dogs B to the plate, as will readily be understood.

It is obvious that the fence-wire, when stretched by our machine, is drawn up tightly across the face of the post, and so held by the lever F, which is in front of the stretching-lever H I, and neither the main plate A nor the stretching-lever nor holding-lever is parallel with or positioned at or across the face of the post, to which the fence-wire is to be fastened; consequently the staples may be driven into the post to secure the wire much more conveniently and easily than is possible when wire-stretchers of other construction are employed.

We are aware that fence-wire stretchers have heretofore been provided with a main plate having one end bent and pointed to form a securing-prong, which, in connection with a pointed adjustable lever extending through a slot in the main plate, formed the attaching means. This main plate had a clamping-lever at its forward end, the space between which lever and the main plate for the wire extending in the direction of the length of the plate, and a stretching-lever was pivoted to the curved end of the main plate in rear of the clamping-lever, so that when the wire was drawn taut by the stretching-lever the said wire was of necessity extended very close and parallel to the main plate, which rendered the insertion of the staples difficult, as the plate was in the way; and, furthermore, the stretching-lever being pivoted to the curved attaching end of the main plate, the wire would, when the lever was forced outward, bind against the corner edge of the fence-posts, and in case barbed wire was used the post would be cut into and the barbs be bent. We claim no such construction as of our invention. In our construction the main plate has the clamping aperture or space at its forward end at right angles to the outer face of the plate, and the stretching-lever is at the same end of the plate. The two dogs B are pivotally secured to the forward part of the plate on its rear or inner side, and are above and below the clamping-aperture and lever F, so that the wire being stretched does not extend along the face of the main plate A, but simply extends through the jaws *f*, which form, in connection with the end of the plate, the clamping space or aperture; also, in the prior construction above referred to, the main plate had ratchet-teeth and the pointed adjustable lever had a pawl to engage said ratchet-teeth. In our construction the forward dogs are pivotally connected by the stems or rods *b* and eyes *b'* to the plate, and the rear dog is connected by the eyebolt E and the nut *e*, which affords a very effective and inexpensive means for adjusting said rear dog.

Having thus fully described our invention, we claim as new and desire to secure by Letters Patent—

1. In a wire-stretcher, the combination, with the main plate having securing devices on its rear face, of a clamping-lever pivoted to the forward end of said plate, with its inner end clamping against the forward outer edge thereof, the wire-receiving space between the inner end of the lever and the end edge of the plate being transverse to the longitudinal plane of the plate, and a stretching-lever pivoted to the outer face of the plate at its forward end and at right angles to the clamping-lever, substantially as set forth.

2. The combination, with the main plate A, having longitudinally-extending lugs *f f* on its forward end, and lugs *h* on its outer face near its forward end, at right angles to the lugs *f f* of the clamping-lever, pivoted between the lugs *f*, the lever H, pivoted between lugs *h h*, and having its outer end forked and provided with a wire-receiving aperture, J, and the lever I, pivoted in the forked end of the lever H, and means on the rear or under face of the main plate for securing it to a post, substantially as set forth.

3. A fence-wire stretcher consisting of the main plate A, having a longitudinal slot, *a*, lugs *f f* on its front end, the clamping-lever F, pivoted between said lugs, a wire-clamping space being formed between the end of said lever and the end of the main plate at right angles to the face of said plate, the lugs *h h* on the outer face of the plate near its forward end and at right angles to lugs *f f*, the compound lever H I, pivoted between said lugs *h*, the forward dogs, B B, having stems secured to the rear face of the plate above and below the inner end of the clamp F, the eyebolt E, extending through the slot *a*, the nut *e* on the outer end of the said bolt, and the dog D, having a stem connected to the eye of the said bolt, the parts being combined substantially as set forth.

CLIFTON R. SUMMERS.
MARSHAL E. SUMMERS.

Witnesses:
ED E. ALESHIRE,
E. T. HOUSTON.