C. H. SCOFIELD.
AUTOMATIC-COCK.

No. 193,556. Patented July 24, 1877.

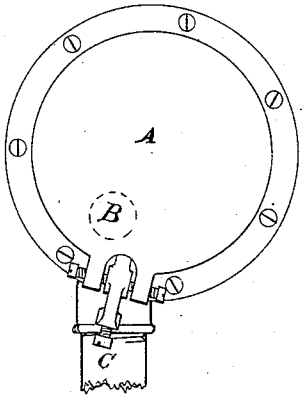

Fig. 1.

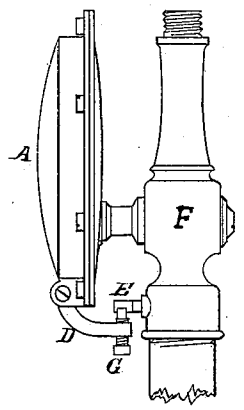

Fig. 2.

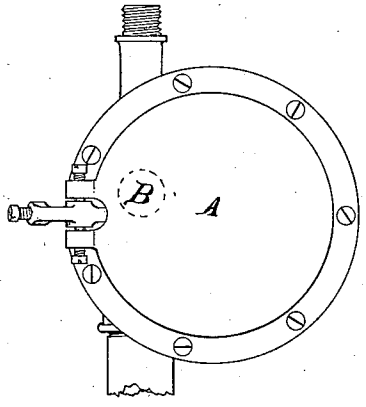

Fig. 4.

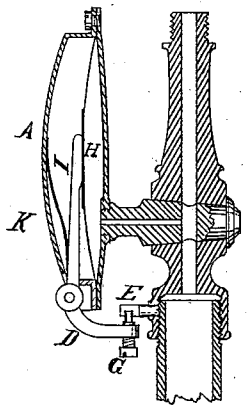

Fig. 3.

Witnesses
Orville P. Allen
James Coupe

Inventor.
Charles Henry Scofield
By Lenyett and Lenyett.

N. PETERS, PHOTO-LITHOGRAPHER, WASHINGTON, D. C.

UNITED STATES PATENT OFFICE.

CHARLES H. SCOFIELD, OF UTICA, NEW YORK, ASSIGNOR OF ONE-HALF HIS RIGHT TO W. P. FISH, OF SAME PLACE.

IMPROVEMENT IN AUTOMATIC COCKS.

Specification forming part of Letters Patent No. **193,556**, dated July 24, 1877; application filed May 7, 1877.

To all whom it may concern:

Be it known that I, CHARLES HENRY SCOFIELD, of Utica, in the county of Oneida and State of New York, have invented certain new and useful Improvements in Automatic Cocks; and I do hereby declare the following to be a full, clear, and exact description of the invention, such as will enable others skilled in the art to which it pertains to make and use it, reference being had to the accompanying drawings, which form part of this specification.

Figure 1 represents a front view under pressure. Fig. 2 represents a side view of the cock. Fig. 3 represents a cross-vertical section of the diaphragm, lever, and spring, showing the position of the catch when the diaphragm is expanded by the pressure in the pipe. Fig. 4 represents a front view after the catch is released from the peg by the withdrawal of the pressure in the pipe.

The automatic cock is made of any suitable metal, and in size convenient for the purposes used. It may be operated by gas, air, water, &c.

The case A, Fig. 1, is fastened to the stem B of the cock at the left and below the center, so that when the pressure is removed it will fall to the right by its own weight and shut off the supply of whatever passes through the cock. The pressure passes through the pipe C and stem B into the case A. When the pressure is on, the lever D, Fig. 2, rests against the latch E, extending out from the body of the cock F, and retains the case A in a vertical position.

The latch E extends from the body of the cock and may be made movable or stationary.

The adjustable screw G at the end of the lever D determines at what pressure the lever will be released.

The diaphragm H (shown in the cross-vertical section, Fig. 3,) is made of flexible material—leather, rubber, or metal—and rests against and operates the lever D, at I. The lever D is held against the diaphragm H by the spring K within the case A, and altogether show the operation of the automatic cock when the pressure is on. When the pressure is removed, the case A, by its own weight, assumes the position shown in Fig. 4, and closes the cock attached to the stem at B.

The pressure may be so applied that the cock will close of itself when the pressure is increased to a given point by putting the latch E below the lever D and reversing the adjustable screw G.

Instead of attaching the case A, Fig. 1, away from its center to the stem B, it may be connected at the center, and a spring may be used in connection with the lever to throw the whole from a perpendicular.

Having thus described my invention, what I claim as new, and desire to secure by Letters Patent, is—

1. The combination, with a rotary cock or plug-valve having a tight casing secured eccentrically to one end of said cock, of a diaphragm within said casing and a lever-catch arranged to rest on the surface of said diaphragm opposite the pressure, substantially as described.

2. The combination, with a valve having a closed receptacle secured eccentrically to the stem of the valve, of a diaphragm located within said receptacle, a lever resting on the outer surface of said diaphragm, and means for adjusting the lever, substantially as described.

In testimony that I claim the foregoing I have hereunto set my hand and seal this 28th day of April, 1877.

CHARLES HENRY SCOFIELD. [L. S.]

Witnesses:

ORVILLE P. ALLEN,

JAMES COUPE.