(12) INTERNATIONAL APPLICATION PUBLISHED UNDER THE PATENT COOPERATION TREATY (PCT)

(19) World Intellectual Property Organization
International Bureau

(43) International Publication Date
15 February 2024 (15.02.2024)

WIPO | PCT

(10) International Publication Number
WO 2024/033318 A1

(51) International Patent Classification:
F04D 19/04 (2006.01) *F16F 15/03* (2006.01)
F04D 29/66 (2006.01) *F16C 32/04* (2006.01)
F16C 39/06 (2006.01)

(21) International Application Number:
PCT/EP2023/071846

(22) International Filing Date:
07 August 2023 (07.08.2023)

(25) Filing Language: English

(26) Publication Language: English

(30) Priority Data:
2211562.0 09 August 2022 (09.08.2022) GB

(71) Applicant: **LEYBOLD GMBH** [DE/DE]; Bonner Strasse 498, 50968 Cologne (DE).

(72) Inventors: **HOESGEN, Christian**; Leybold GmbH, Bonner Str. 498, 50968 Cologne (DE). **KALISCH, Dirk Christian**; Leybold GmbH, Bonner Strasse 498, 50968 Cologne (DE). **GREVEN, Alois**; Leybold GmbH, Bonner Strasse 498, 50968 Cologne (DE). **RADERMACHER, Daniel**; Leybold GmbH, Bonner Strasse 498, 50968 Cologne (DE). **BERGER, Christian**; Leybold GmbH, Bonner Strasse 498, 50968 Cologne (DE). **DEMBEK, Roman**; Leybold GmbH, Bonner Strasse 498, 50968 Cologne (DE).

(74) Agent: **TOTMAN, Clare**; Edwards Limited, Innovation Drive, Burgess Hill Sussex RH15 9TW (GB).

(81) Designated States *(unless otherwise indicated, for every kind of national protection available)*: AE, AG, AL, AM, AO, AT, AU, AZ, BA, BB, BG, BH, BN, BR, BW, BY, BZ, CA, CH, CL, CN, CO, CR, CU, CV, CZ, DE, DJ, DK, DM, DO, DZ, EC, EE, EG, ES, FI, GB, GD, GE, GH, GM, GT, HN, HR, HU, ID, IL, IN, IQ, IR, IS, IT, JM, JO, JP, KE, KG, KH, KN, KP, KR, KW, KZ, LA, LC, LK, LR, LS, LU, LY, MA, MD, MG, MK, MN, MU, MW, MX, MY, MZ, NA, NG, NI, NO, NZ, OM, PA, PE, PG, PH, PL, PT, QA, RO, RS, RU, RW, SA, SC, SD, SE, SG, SK, SL, ST, SV, SY, TH, TJ, TM, TN, TR, TT, TZ, UA, UG, US, UZ, VC, VN, WS, ZA, ZM, ZW.

(84) Designated States *(unless otherwise indicated, for every kind of regional protection available)*: ARIPO (BW, CV, GH, GM, KE, LR, LS, MW, MZ, NA, RW, SC, SD, SL, ST, SZ, TZ, UG, ZM, ZW), Eurasian (AM, AZ, BY, KG, KZ, RU, TJ, TM), European (AL, AT, BE, BG, CH, CY, CZ, DE, DK, EE, ES, FI, FR, GB, GR, HR, HU, IE, IS, IT, LT, LU, LV, MC, ME, MK, MT, NL, NO, PL, PT, RO, RS, SE,

(54) Title: VACUUM PUMP WITH EDDY CURRENT DAMPER

Fig.1

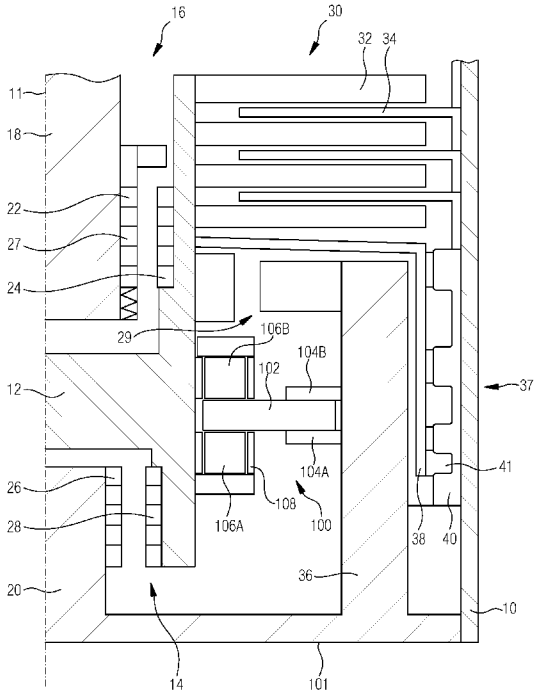

(57) Abstract: Vacuum pump, in particular a turbomolecular vacuum pump, comprising a housing and a rotor shaft disposed in the housing and rotatably supported by at least on permanent magnet bearing. Therein, the magnet bearing is arranged at one end of the rotor shaft and wherein the magnet bearing comprises a static bearing element and a rotated bearing element radially arranged next to each other. An eddy current damper is provided having a conductive disk connected to the static bearing element.

[Continued on next page]

WO 2024/033318 A1

SI, SK, SM, TR), OAPI (BF, BJ, CF, CG, CI, CM, GA, GN, GQ, GW, KM, ML, MR, NE, SN, TD, TG).

Published:

— *with international search report (Art. 21(3))*

VACUUM PUMP WITH EDDY CURRENT DAMPER

The present invention relates to a vacuum pump and in particular to a turbomolecular pump.

Common vacuum pumps comprise a housing having an inlet and an outlet. A rotor is disposed in the housing and rotatably supported by at least one bearing. The rotor comprises a rotor shaft, wherein at least one pump element is connected to the rotor shaft. In the case of a turbomolecular vacuum pump a plurality of vanes is connected to the rotor shaft and interacting with a plurality of vanes of a stator being connected to a housing. Upon rotation of the rotor by an electromotor a gaseous medium is conveyed from the inlet towards the outlet of the vacuum pump.

In particular, if the rotor shaft is rotatably supported by one or more magnetic bearings the radial vibrations of the rotor shaft need to be damped in order to stabilize rotation of the rotor shaft and avoid contact between the pump elements and the housing. However, such a damper is an additional element which need to be considered and usually increases the size of the vacuum pump.

Thus, it is an object of the present invention to provide a vacuum pump with a damper for radial vibrations which is compact.

The problem is solved by a vacuum pump according to claim 1.

In a first aspect a vacuum pump, preferably built as turbomolecular pump, is provided. The vacuum pump comprises a housing and a rotor shaft disposed in the housing and rotatably supported by at least one bearing. At least one pump element is connected to the rotor shaft and rotated with the rotor shaft by an electromotor. Therein, the vacuum pump according to the present invention comprises at least a Holweck stage wherein the pump element is built by a cylinder connected to the rotor shaft and a stator surrounding the cylinder

connected to the housing. Therein, the stator comprises a threaded groove for guiding of the gas molecules towards the outlet of the vacuum pump. In order to achieve a compact design of the vacuum pump an eddy current damper (ECD) is arranged inside the cylinder of the Holweck stage to provide efficient damping of radial vibration without increasing the space requirements of the vacuum pump. Usually the cylinder of the Holweck stage is as large as possible in diameter in order to increase the circumferential speed. Thus, an interior volume is created within the cylinder of the Holweck stage. It is known to use this interior volume to place the electromotor. However, it was found to be beneficial by the present invention to also use this interior volume for the eddy current damper in order to minimize the space requirements and implement such ECD without increasing the size of the vacuum pump.

Preferably, the eddy current damper comprises a disk connected to the housing and at least one ring magnet connected to the rotor shaft wherein the disk is arranged axially next to the ring magnet. Thus, by the magnetic field of the ring magnet rotated together with the rotor shaft eddy currents are induced into the disk which is made from a conductive material such as copper, aluminum or the like.

Preferably, the housing comprises an interior wall extending into the cylinder of the Holweck stage wherein the disk is attached to the interior wall for connecting the disk to the housing.

Preferably, the rotor shaft is supported by two bearings wherein the ECD is disposed between the two bearings. Therein, at least one bearing is built as permanent magnetic bearing. Preferably, the bearing towards the inlet side or high vacuum side of the vacuum pump is built as permanent magnetic bearing. Alternatively, both bearings are built as permanent magnetic bearings.

Preferably, the ECD is disposed between the electromotor and the bearing of the exhaust side of the rotor shaft towards the outlet of the vacuum pump. Therein, the electromotor can also be connected to the interior wall and also placed within the cylinder of the Holweck stage.

Preferably, the disk is separated into at least two parts. Separation is along a circumferential direction of the disk. By separating the disk into at least two or more parts assembly of the disk around the rotor shaft is feasible. Thus, preassembly of the at least one ring magnet to the rotor shaft can be carried out outside the housing providing the possibility to balance the rotor shaft together with the at least one ring magnet. Subsequently, after balancing, the disk is assembled around the rotor shaft and the preassembled rotor shaft is inserted into the housing. As last step, the disk is connected to the housing, i.e. the interior wall of the housing. Thus, it is not necessary to join the at least one ring magnet to the rotor shaft within the housing after assembly of the rotor into the housing.

Preferably, the EDC comprises a second ring magnet arranged opposite to the first ring magnet relative to the disk. Thus, by the first ring magnet and the second ring magnet a gap is created, wherein the disk is arranged in the gap. Thus, by this arrangement the magnet fields at the position of the disk is enhanced thereby more efficiently induce eddy currents into the disk.

Preferably, the disk comprises one radial extending part preferably extending into the gap between the first ring magnet and the second ring magnet and further comprising at least one axial extending part. Therein, the axial extending part serves as conductor in order to decrease ohmic resistance of the disk enhancing flow of the eddy currents through the disk.

In the following the present invention is described with reference to the accompanied figures.

The figures show:

Figure 1 a first embodiment according to the present invention,

Figure 2 a detailed view of the second embodiment of the present invention,

Figure 3 a detailed view of another embodiment of the present invention and

Figure 4 a detailed view of another embodiment of the present invention.

Referring to figure 1 showing a vacuum pump built as molecular vacuum pump. Therein, for simplicity only one half of the vacuum pump is shown being substantially symmetrical around the center excess 11. The vacuum pump comprises a housing 10 wherein in the housing a rotor shaft 12 is disposed. The rotor shaft 12 is rotatably supported by a first bearing 16 built as permanent magnetic bearing and a second bearing 14 also built as permanent magnetic bearing. The first magnetic bearing 16 comprises a static bearing element 22 connected to the housing via a trunnion 18 extending into recess of the rotor shaft 12. Further, the first magnetic bearing 16 comprises a rotated bearing element 24 connected to the rotor shaft 12. The static bearing element 22 and the rotated bearing element 24 comprise each a number of ring magnets 27 being in mutual repulses to each other in order to create radial support between the static bearing element 22 and the rotated bearing element 24. Similar, the second magnetic bearing 14 also comprises a static bearing element 26 comprises a plurality of ring magnets 27 and a rotated bearing element 28 being connected to the rotor shaft 12 also comprising a plurality of ring magnets 27 being in mutual repulsing to the ring magnets 27 of the static bearing element

26. Therein, as shown in figure 1, the static bearing element is also connected to the housing 10 via a trunnion 20.

The rotor shaft 12 is rotated by an electromotor 29. A plurality of pump elements 32 built as vanes are connected to the rotor shaft 12 and interacting with stator elements 34 alternating arranged to the pump elements 32 and interacting with each other in order to convey a gaseous medium. Further, the vacuum pump comprises a Holweck stage 37 including a cylinder 38 being connected to the rotor shaft and rotated together with the rotor shaft. Further, the Holweck stage 37 comprises a Holweck stator 40 having a threaded groove 41 in order to convey the gaseous medium from the inlet 30 towards an outlet of the vacuum pump (not shown). Therein, the housing 10 comprises an interior wall 36 wherein the stator of the electromotor 29 is connected to the interior wall. The interior wall 36 is extending into the inner volume of the cylinder 38 of the Holweck stage 37.

Further, according to the present invention the vacuum pump comprises an eddy current damper 100 (ECD). The ECD is arranged inside the cylinder 38 of the Holweck stage 37 in order to provide a compact design of the vacuum pump.

The ECD comprises a disk 102 made of a conductive material such as copper or aluminum. The disk 102 is connected via connecting elements 104A and 104B to the interior wall 36 of the housing 10. Thus, the disk 102 is non-rotating. Further, the ECD 100 comprises a first ring magnet 106A and a second ring magnet 106B being arranged axially next to the disk 102. By the first ring magnet 106A and the second ring magnet 106B a gap is created, wherein the conductive disk 102 of the ECD 100 extends into the gap. First ring magnet 106A and second ring magnet 106B are attached to the rotor shaft 12 and rotated together with the rotor shaft 12. Thus, due to rotation and upon radial vibrations of the rotor shaft 12, by the magnetic field at the position of the conductive disk 102 eddy currents are induced into the conductive disk 102 wherein the induced

eddy currents create a magnetic field interacting with the magnetic field of the first ring magnet 106A and second ring magnet 106B wherein the created magnetic force is opposite to the movement of vibration thereby creating a restoring force to the rotor shaft 12 and damping the radial vibration of the rotor.

Therein, the conductive disk 102 can be separated into two parts along its circumferential direction. Thus, the first ring magnet 106A and second ring magnet 106B can be preassembled to the rotor shaft 12. Afterwards the conductive disk 102 is assembled around the rotor shaft 12. Subsequently, the rotor shaft 12 is inserted into the housing 10 and attached by the connecting elements 104A, 104B to the interior wall 36 of the cap element 101 of the housing 10. Alternatively, the rotor shaft 12 is inserted into a first housing element, subsequently, the conductive disk 102 is assembled around the rotor shaft 12 and afterwards the cap element 101 with the interior wall 36 is inserted into the housing, i.e. into the cylinder of the rotor. In a last step, the conductive disk 102 is connected to the interior wall 36.

Thus, by the embodiment of figure 1 a compact design for vacuum pump is provided wherein the space within the cylinder 38 of the Holweck stage 37 is efficiently used in order to place an ECD to damper radial vibrations of the rotor.

Referring to figure 2 showing a detailed view of the first magnet bearing 16 at the inlet side of the of a vacuum pump which can be built similar than the vacuum pump of figure 1.

In the following same or similar elements are indicated by the same reference sings.

In figure 2 the static bearing element 22 comprises an adjustment element 110 in order to adjust the axial position of the static bearing element 22 by adjusting the position of the static bearing element 22 against the restoring force of the

spring 114. Therein, the adjustment element 110 comprises a radial protrusion 111 wherein a conductive disk 112 is connected to the radial protrusion 111. Thus, by the radial protrusion 111 the conductive disk 112 is arranged axially next to a ring magnet 116 of the ECD connected to the rotor shaft 12. The ring magnet 116 of the ECD is separated by a non-magnetic ring element 118 from the ring magnets 27 of the rotated bearing element 24. Thus, by this configuration, the ECD is integrated into the magnetic bearing providing a compact design. In particular, the ECD is positioned between the magnetic bearing and the end 119 of the rotor shaft 12. Thus, efficient damping of radial vibrations can be achieved. Further, due to its position, the ECD can be built small while still efficiently damping the radial vibrations.

Alternatively, the ECD of figure 2 can also be implemented in the second magnetic bearing at the exhaust side of the vacuum pump.

Referring to figure 3 showing a similar configuration to figure 2 wherein a ferritic material element 120 is placed between the ring magnet 116 of the ECD and the non-magnetic material element 118 separating the ring magnet 116 of the ECD from the ring magnets 27 of the rotated bearing element 24. Thus, by the ferritic material element 120 a magnetic circuit is created enhancing the magnetic field at the position of the conductive disk 112. In particular, the adjustment element 110 is also built from a ferritic material further enhancing the magnetic field at the position of the conductive disk 116 by creating a full or almost closed magnetic circuit.

Although shown in figure 3 that the ECD is implemented in the first magnetic bearing at the inlet side of the vacuum pump, the ECD can also be implemented, alternatively or additionally, in the second magnetic bearing at the exhaust side of the vacuum pump.

Referring to figure 4 showing another embodiment of the present invention wherein the adjustment 110 includes a radial protrusion 111 as separate element carrying the conductive disk 112. Therein, the conductive disk 112 is axially next to the outermost ring magnet 27 of the rotated bearing element 24. Thus, the outermost ring magnet 27 of the rotated bearing element 24 simultaneously facilitates supporting the rotor shaft 12 and at the same time is used as ring magnet for the ECD inducing eddy currents upon vibration of the rotor shaft. Thereby, a compact design is achieved and an additional ring magnet only for the ECD can be avoided.

Although shown in figure 4 that the ECD is implemented in the first magnetic bearing at the inlet side of the vacuum pump, the ECD can also be implemented, alternatively or additionally, in the second magnetic bearing at the exhaust side of the vacuum pump.

Of course, the embodiments of figure 1 and figure 2 to 4 can be freely combined. The vacuum pump may comprise an eddy current damper placed within the cylinder 38 of the Holweck stage 37 in connection with an additional eddy current damper integrated in one of the magnetic bearings 14, 16. Furthermore the vacuum pump may comprise an ECD integrated in the first magnetic bearing 16 or in the second magnetic bearing 14. Alternatively, the vacuum pump comprises an ECD in the first magnetic bearing as well as in the second magnetic bearing. Therein, the ECDs can be built identically along with one of the embodiments 2 to 4 or can be built different according to one of the embodiments of figures 2 to 4.

CLAIMS

1. Vacuum pump, in particular a turbomolecular vacuum pump comprising:

   a housing;

   a rotor shaft disposed in the housing and rotatably supported by at least one bearing;

   a Holweck stage comprising a cylinder connected to the rotor shaft and a stator surrounding the cylinder connected to the housing;

   an eddy current damper arranged inside the cylinder of the Holweck stage.

2. The vacuum pump according to claim 1, wherein the eddy current damper comprises a disk connected to the housing and at least one ring magnet connected to the rotor shaft, wherein the disk is arranged axially next to the ring magnet.

3. The vacuum pump according to claims 1 or 2, comprising an interior wall extending into the cylinder, wherein the disk attached to the interior wall.

4. The vacuum pump according to any of claims 1 to 3, wherein the rotor shaft is supported by two bearings, wherein the eddy current damper is disposed between the two bearings.

5. The vacuum pump according to any of claims 1 to 4, wherein the at least one bearing and preferably all bearings are built as permanent magnetic bearing.

6. The vacuum pump according to any of claims 1 to 5, wherein the disk is separated in to at least two parts.

7. The vacuum pump according to any of claims 1 to 6, wherein the disk comprises one radial extending part and at least one axial extending part, wherein the radial extending part is arranged next to an axial face of the at least one ring magnet or in the gap created by the two ring magnets.

Fig.1

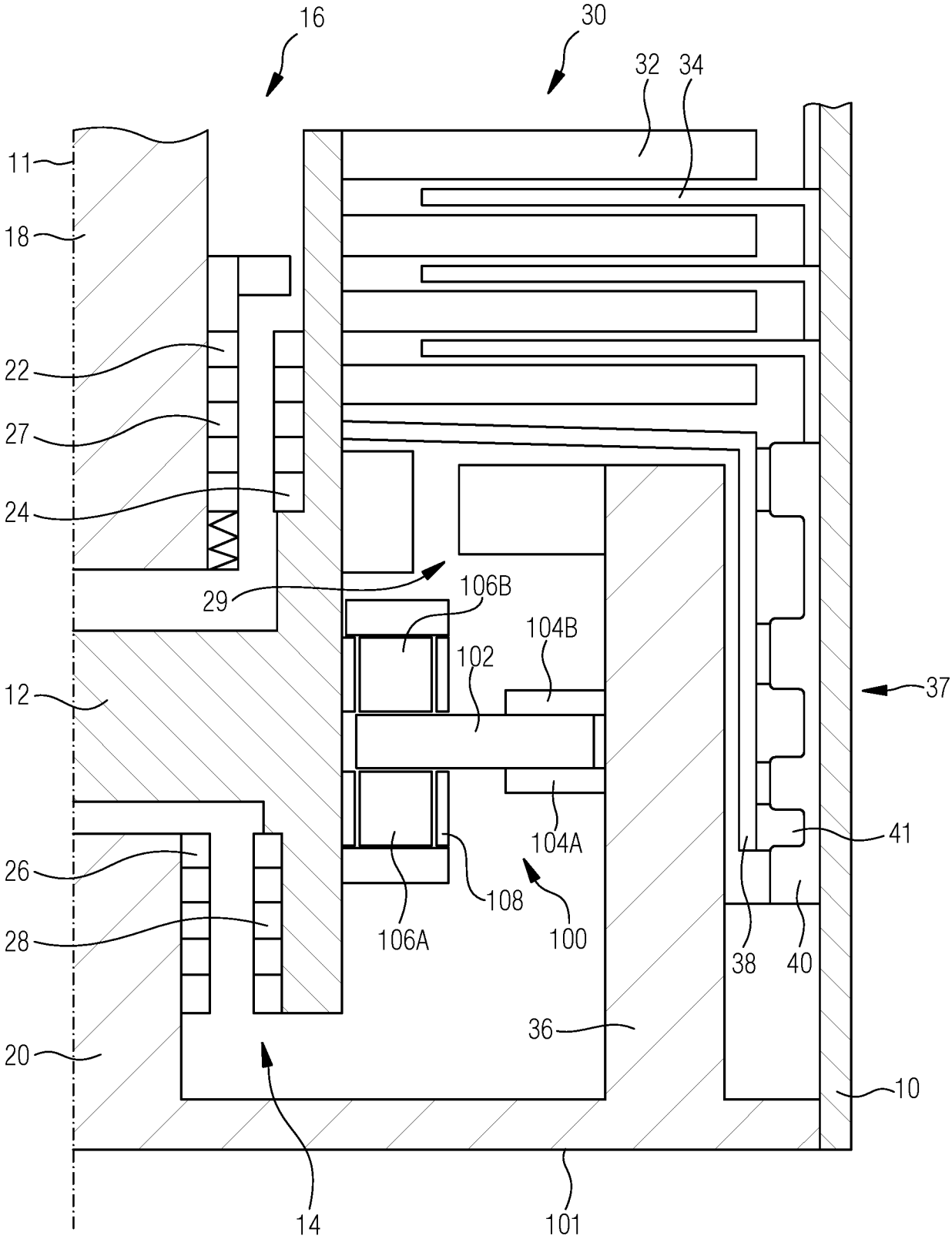
16
30
32
34
11
18
22
27
24
29
106B
104B
102
12
37
41
26
28
106A
108
100
104A
38
40
36
20
10
14
101

Fig.2

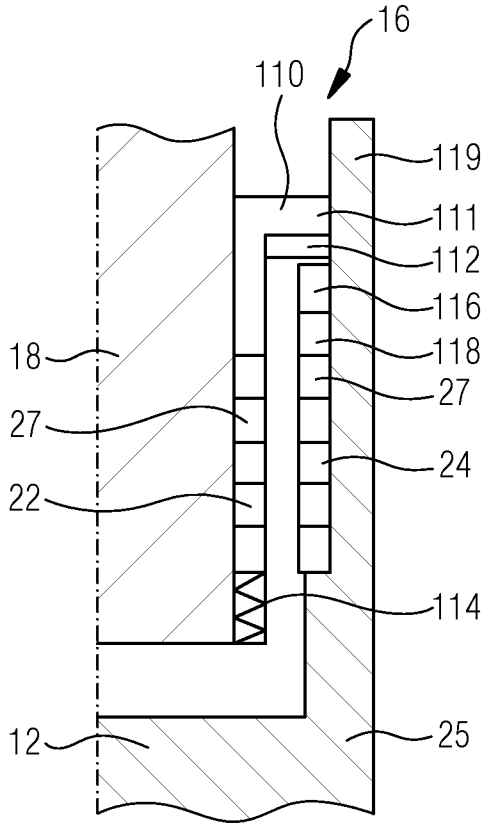
16
110
119
111
112
116
118
27
24
18
27
22
114
12
25

Fig.3

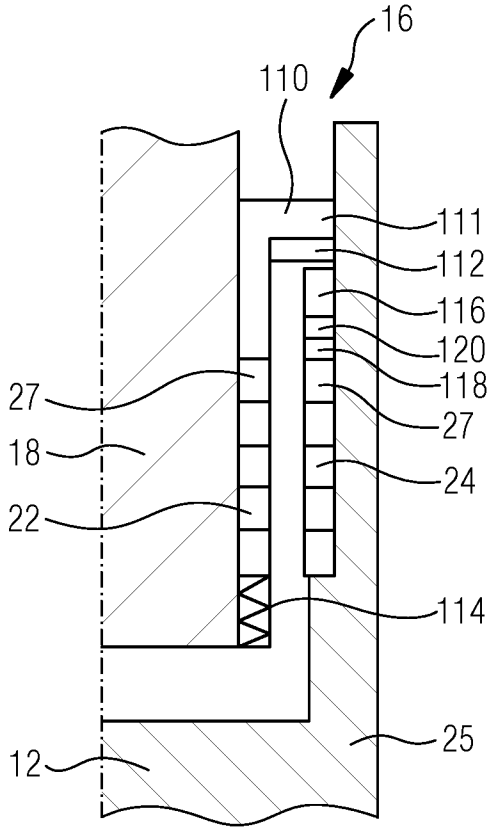
16
110
111
112
116
120
118
27
27
18
24
22
114
25
12

Fig.4

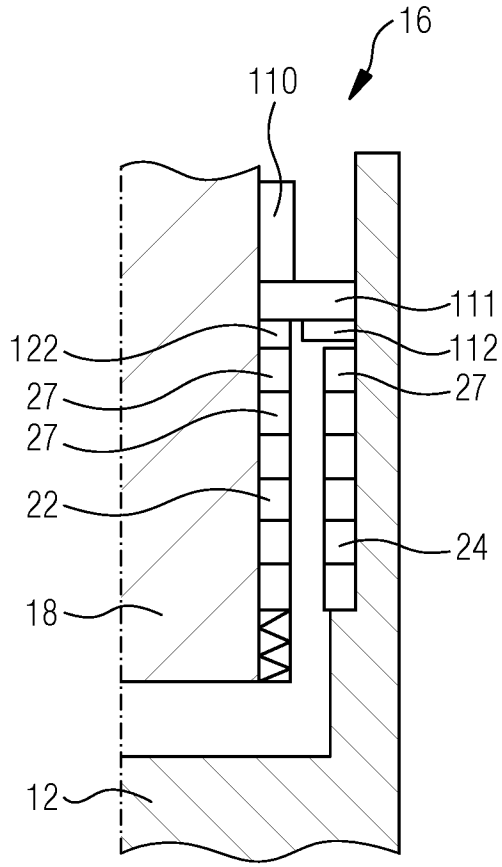

INTERNATIONAL SEARCH REPORT

International application No
PCT/EP2023/071846

A. CLASSIFICATION OF SUBJECT MATTER
INV. F04D19/04 F04D29/66 F16C39/06 F16F15/03 F16C32/04
ADD.

According to International Patent Classification (IPC) or to both national classification and IPC

B. FIELDS SEARCHED

Minimum documentation searched (classification system followed by classification symbols)
F04D F16C F16F

Documentation searched other than minimum documentation to the extent that such documents are included in the fields searched

Electronic data base consulted during the international search (name of data base and, where practicable, search terms used)
EPO-Internal

C. DOCUMENTS CONSIDERED TO BE RELEVANT

Category*	Citation of document, with indication, where appropriate, of the relevant passages	Relevant to claim No.
X	JP H04 219494 A (DAIKIN IND LTD) 10 August 1992 (1992-08-10)	1-5
Y	paragraphs [0012], [0027] - [0030];	7
A	figures 1,6	6
Y	US 5 126 610 A (FREMEREY JOHAN K [DE]) 30 June 1992 (1992-06-30) column 9, lines 35-55; figure 3	7
X	US 2003/180162 A1 (BEYER CHRISTIAN [DE] ET AL) 25 September 2003 (2003-09-25) paragraph [0032]; figures 1,2,4,5	1-5,7
A	US 5 059 092 A (KABELITZ HANS-PETER [DE] ET AL) 22 October 1991 (1991-10-22) column 2, lines 41-48; figure 1	7

☐ Further documents are listed in the continuation of Box C.

☒ See patent family annex.

* Special categories of cited documents :

"A" document defining the general state of the art which is not considered to be of particular relevance

"E" earlier application or patent but published on or after the international filing date

"L" document which may throw doubts on priority claim(s) or which is cited to establish the publication date of another citation or other special reason (as specified)

"O" document referring to an oral disclosure, use, exhibition or other means

"P" document published prior to the international filing date but later than the priority date claimed

"T" later document published after the international filing date or priority date and not in conflict with the application but cited to understand the principle or theory underlying the invention

"X" document of particular relevance;; the claimed invention cannot be considered novel or cannot be considered to involve an inventive step when the document is taken alone

"Y" document of particular relevance;; the claimed invention cannot be considered to involve an inventive step when the document is combined with one or more other such documents, such combination being obvious to a person skilled in the art

"&" document member of the same patent family

Date of the actual completion of the international search	Date of mailing of the international search report
23 October 2023	31/10/2023

Name and mailing address of the ISA/	Authorized officer
European Patent Office, P.B. 5818 Patentlaan 2 NL - 2280 HV Rijswijk Tel. (+31-70) 340-2040, Fax: (+31-70) 340-3016	Brouillet, Bernard

1

INTERNATIONAL SEARCH REPORT

Information on patent family members

International application No
PCT/EP2023/071846

Patent document cited in search report	Publication date	Patent family member(s)	Publication date
JP H04219494 A	10-08-1992	JP 2541371 B2	09-10-1996
		JP H04219494 A	10-08-1992
US 5126610 A	30-06-1992	AT E97270 T1	15-11-1993
		CA 1329945 C	31-05-1994
		DE 3808331 A1	28-09-1989
		DE 3844563 A1	23-11-1989
		DK 115089 A	13-09-1989
		EP 0332979 A2	20-09-1989
		ES 2048223 T3	16-03-1994
		JP 3121819 B2	09-01-2001
		JP H01279116 A	09-11-1989
		SU 1711681 A3	07-02-1992
		US 5126610 A	30-06-1992
US 2003180162 A1	25-09-2003	DE 10043235 A1	14-03-2002
		EP 1313951 A1	28-05-2003
		JP 2004513277 A	30-04-2004
		US 2003180162 A1	25-09-2003
		WO 0218794 A1	07-03-2002
US 5059092 A	22-10-1991	DE 3931661 A1	04-04-1991
		EP 0414127 A1	27-02-1991
		JP 2870604 B2	17-03-1999
		JP H0396696 A	22-04-1991
		US 5059092 A	22-10-1991