W. D. GRAY & J. G. HINTZ, JR.

BOLTING, SIFTING, AND GRADING MACHINE.

APPLICATION FILED FEB. 1, 1897.

1,078,917. Patented Nov. 18, 1913.

4 SHEETS—SHEET 1.

Fig. 1.

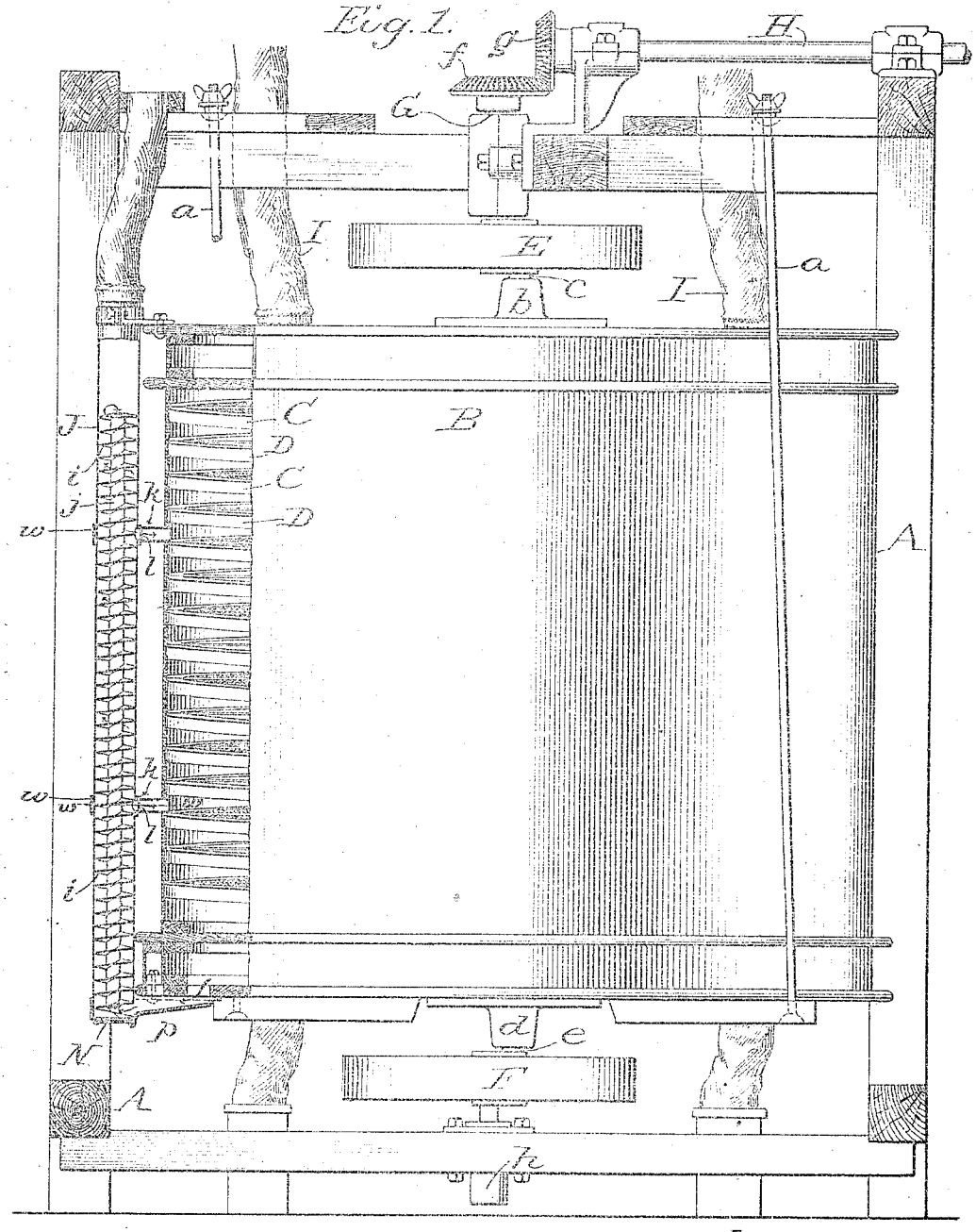

Attest;
D. E. Burdine
D. E. Burdine

Inventors:
William D. Gray,
John G. Hintz Jr.,
by Dodger Sons, Att'ys

W. D. GRAY & J. G. HINTZ, JR.

BOLTING, SIFTING, AND GRADING MACHINE.

APPLICATION FILED FEB. 1, 1897.

1,078,917.

Patented Nov. 18, 1913.

4 SHEETS—SHEET 2.

Fig. 2.

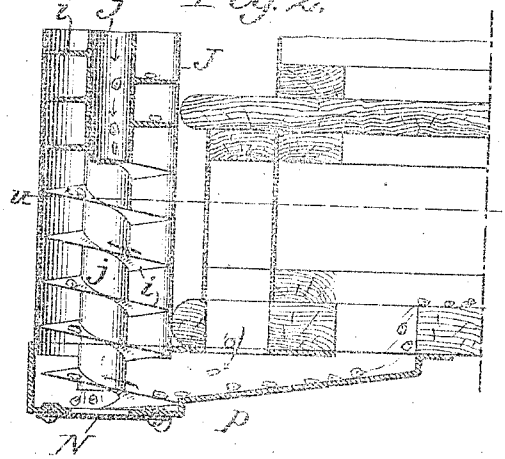

Fig. 4.

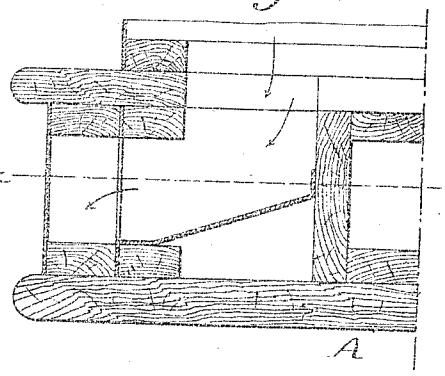

Fig. 2a

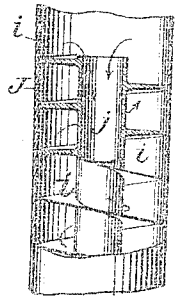

Fig. 3.

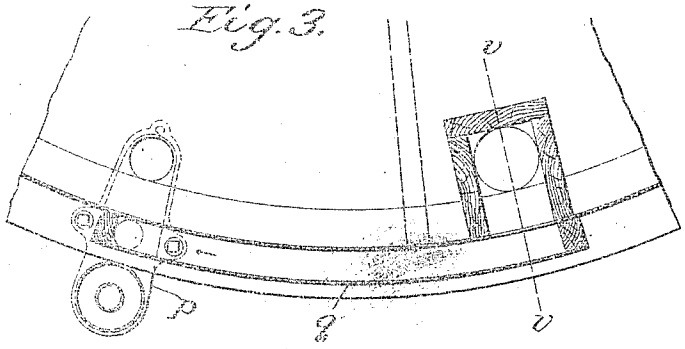

Fig. 5

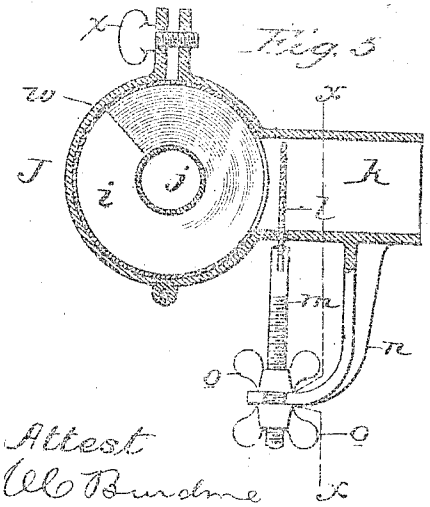

Fig. 6.

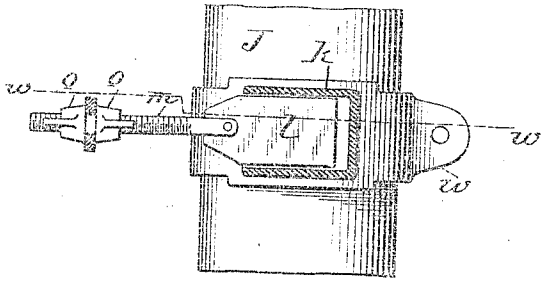

Attest

A. D. Burdine

D. E. Burdine

Inventors:

William D. Gray,

John G. Hintz Jr.,

by Dodge & Dodge,

Attys

W. D. GRAY & J. G. HINTZ, JR.

BOLTING, SIFTING, AND GRADING MACHINE.

APPLICATION FILED FEB. 1, 1897.

1,078,917.

Patented Nov. 18, 1913.

4 SHEETS—SHEET 3.

Fig. 7.

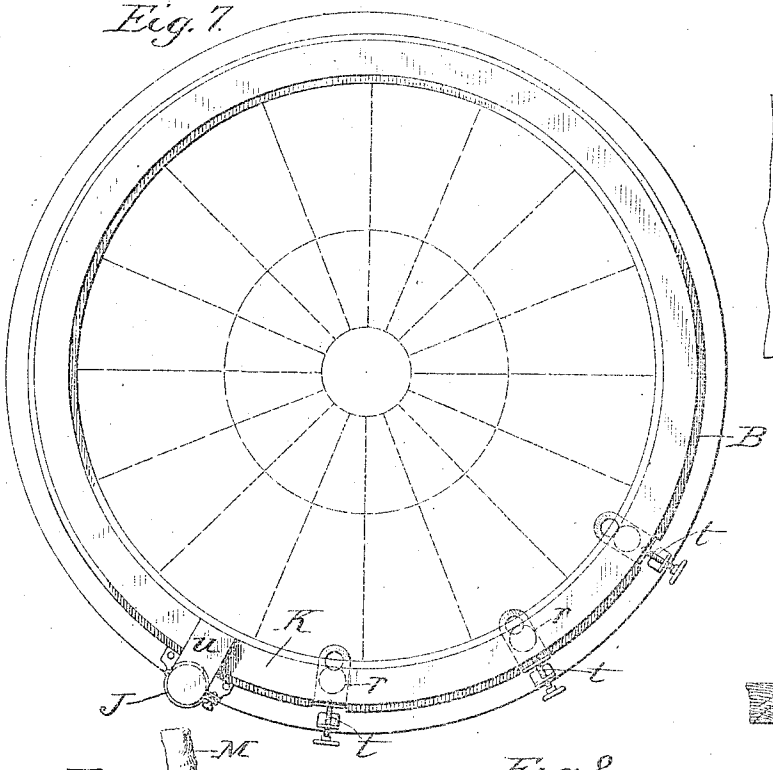

Fig. 9.

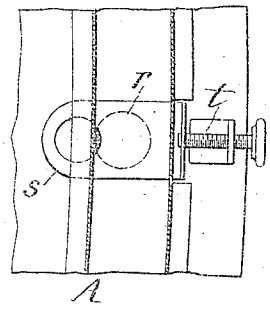

Fig. 10.

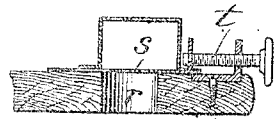

Fig. 8.

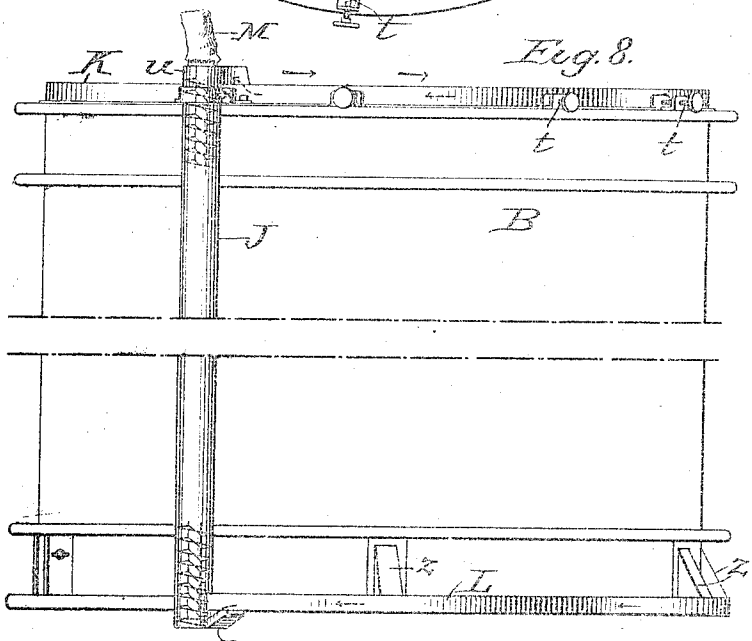

Attest

W. C. Burdine.

D. E. Burdine

Inventors:

William D. Gray,

John G. Hintz Jr.,

by Dodget Lung Attys.

W. D. GRAY & J. G. HINTZ, Jr.

BOLTING, SIFTING, AND GRADING MACHINE.

APPLICATION FILED FEB. 1, 1897.

1,078,917. Patented Nov. 18, 1913.

4 SHEETS—SHEET 4.

Fig. 11.

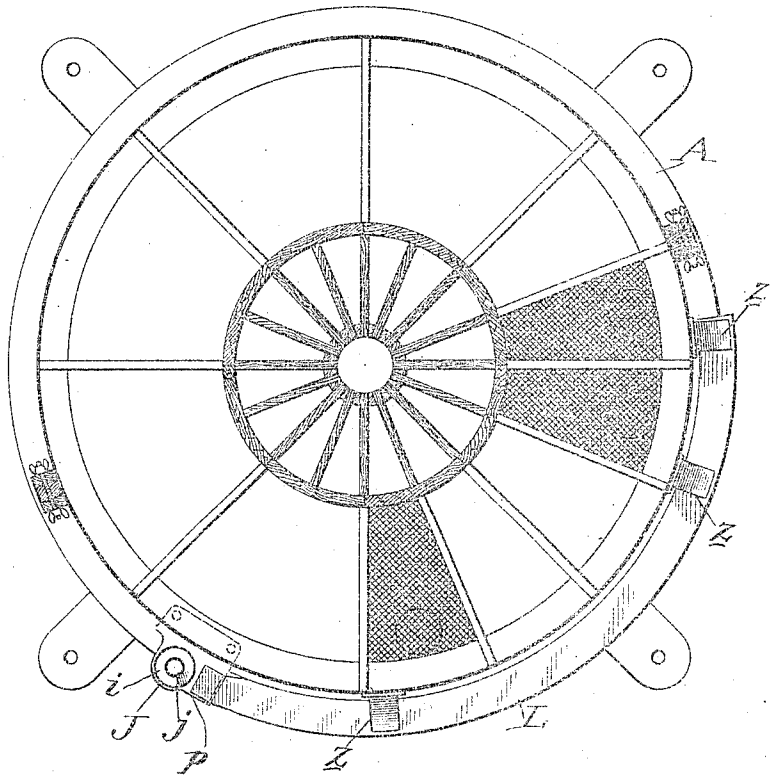

Fig. 12.

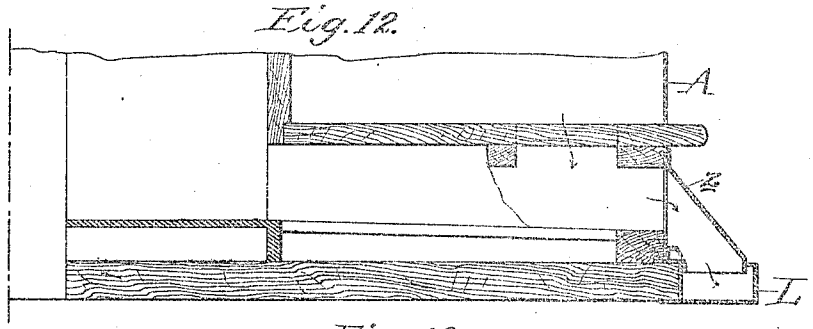

Fig. 13.

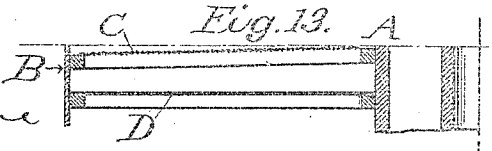

Attest;
C. C. Burdine
D. E. Burdine

Inventors:
William D. Gray,
John G. Hintz Jr.
by Dodger Sons
Attys

UNITED STATES PATENT OFFICE.

WILLIAM D. GRAY AND JOHN G. HINTZ, JR., OF MILWAUKEE, WISCONSIN, ASSIGNORS, BY MESNE ASSIGNMENTS, TO ALLIS-CHALMERS MANUFACTURING COMPANY, A CORPORATION OF DELAWARE.

BOLTING, SIFTING, AND GRADING MACHINE.

1,078,917. Specification of Letters Patent. Patented Nov. 18, 1913.

Application filed February 1, 1897. Serial No. 621,504.

To all whom it may concern:

Be it known that we, WILLIAM D. GRAY and JOHN G. HINTZ, Jr., citizens of the United States, residing at Milwaukee, in the county of Milwaukee and State of Wisconsin, have invented certain new and useful Improvements in Bolting, Sifting, and Grading Machines, of which the following is a specification.

Our invention relates to that type of bolting, sifting and grading machines set forth in Letters Patent of the United States, No. 597,412, granted to John G. Hintz, Jr., January 18th, 1898, and in Patent No. 559,378, granted to William D. Gray, May 5th, 1896.

The present invention has reference particularly to means for automatically and constantly cleaning the cloth or screening medium, and keeping its meshes open.

The principle, and the construction and mode of operation of the apparatus will be explained in connection with the accompanying drawings, in which:

Figure 1 is an elevation of our improved machine, partially in section to show the interior construction of certain parts; Fig. 2 is an enlarged vertical sectional view of a lower portion of the machine and of the trunk through which cleaning material is carried to the head of the machine; Fig. 2ª, a partially sectional elevation of the elevator trunk, showing the upper portion thereof and the central return spout therein; Fig. 3 is a horizontal section, on the line *u*, *u*, of Figs. 2 and 4, but on a smaller scale; Fig. 4 is a vertical section on the line *v*, *v*, of Fig. 3; Fig. 5 a section on the line *w*, *w*, of Figs. 1 and 6; Fig. 6, a section on the line *x*, *x*, of Fig. 5; Fig. 7 a top plan view of a machine embodying the invention in a modified form; Fig. 8 a side elevation of the same, shortened vertically for convenience of illustration; Figs. 9 and 10 details of valves controlling feed or delivery of cleaning materials; Fig. 11 a horizontal section of the machine shown in Figs. 7 and 8; Fig. 12, a vertical section of a lower portion thereof; Fig. 13, a sectional view showing the inclination of the sieve from the center toward the periphery of the shell or casing.

It is a common practice at the present time, and has been for many years, to introduce with the stock to be graded, a suitable quantity of material of different nature or quality, as bran, whole grain, peas, shot, or the like, which serves either to loosen up the mass, or to clear the meshes of the sieve or screen, or both. This is found quite efficacious in practice, but it requires care and attention to maintain at all times a proper supply of such material, and to insure its even distribution through the stock. With vertical machines, this becomes doubly difficult, and particularly where there is no rotation of the machine or of the sieves about a fixed center or axis.

Our invention aims to secure such uniform and certain supply and distribution in machines having a spiral or screw-like sifting warped surface winding about a vertical axis, and in which the motion is a bodily movement or travel of the sieve in a horizontal plane and in a substantially circular path.

Another object of the invention is to efficiently balance the machine.

Figs. 1 to 6 inclusive illustrate the invention in its preferred form, and these will be described first.

A indicates a strong framework, of wood or other suitable material, within which is suspended a cylindrical body, shell or casing B, the heads or top and bottom of which are usually made of wood, while the body or cylinder is of sheet metal. Within this body, which is suspended by rods or hangers *a*, having ball and socket connections with frame A and with shell or body B, there is arranged a partitioned central feed trunk, and between this and the shell a spiral sieve C and corresponding gather-board D, as in the patent to Gray, 559,378, referred to.

At the top of the shell or body B there is a central casting *b* which receives the crank pin *c* of a balance wheel E, and at the bottom there is a similar casting *d* which receives the crank pin *e* of a balance wheel F. The upper wheel E is carried by a vertical shaft G, turning in suitable boxes or bearings, and provided with a bevel pinion *f*, which meshes with and receives motion from a similar bevel pinion *g*, carried by a horizontal driving shaft H, mounted in boxes on the top of frame A.

The lower balance wheel has a short vertical shaft or spindle, resting in a suitable step or box *h*, as shown.

The crank pin *c* of balance wheel E and the crank pin *e* of balance wheel F are in line and their axes coincide with the central axis of the shell or body B which has its side walls made up of an infinite number of plane sides equidistant from the axis, constituting a cylindrical structure in this specific showing and mathematically considered being the limit of a regular prismatic structure which it may truly be termed, and as such it has its side walls symmetrically placed with reference to this common central axis.

It will be seen that when shaft H is rotated, the body, shell or casing B with its contained feeding trunk, sieves and gatherboards will be bodily gyrated horizontally, in a circular path.

The stock is fed to the machine through a flexible spout or spouts I, as indicated.

J indicates a vertical trunk or pipe, advisably of sheet metal, affixed to the side of body, shell or casing B, and consequently movable therewith. Within the trunk J is a fixed spiral plate or strip *i*, in the nature of a continuous or unbroken screw conveyer, winding about a central pipe or tube *j*, open from end to end, and terminating below the upper and above the lower end of trunk J, as shown in Fig. 2, said trunk and spiral plate or strip producing a conducting channel through which material is caused to ascend from the foot of the sieve or screen to any higher level.

The direction of winding of the sieve, that is to say, to the right or to the left, will of course depend upon the direction in which it is to be moved, as the advance of the material is effected by a movement of the sieve from beneath the material. The direction of winding of the spiral strip or plate *i* is the reverse of that of the sieve, because it is the purpose of said strip to cause an upward travel of material within and through the trunk, by an action exactly the opposite of that of the sieves upon the stock. In other words, the material within the pipe or trunk J is carried gradually upward by reason of the inclined plane being quickly moved forward beneath said material; while the stock is carried gradually downward by reason of the spiral sieve being moved quickly backward beneath the material. By thus employing a fixed spiral we are enabled to cause an upward travel of material through the trunk J without employing any moving part, except as the trunk moves bodily with the chest or casing B. We are further enabled, by reason of the centrifugal force thus generated, to discharge material from said trunk, laterally, at any desired point or points in its height, by simply making suitable outlets and providing them with regulating gates or valves.

In practice, two or more grades or "breaks" are often treated simultaneously, in the same machine, one upon one section and another upon another section of the sieve. In such case it is desirable to deliver cleaning material to the several sections separately. We therefore form a series of lateral branches *k*, opening from the trunk J at points in its height corresponding with the heads of different sieve sections, and we provide each branch pipe with a regulating gate or cut-off *l*, as shown in Figs. 1, 5 and 6. By opening these valves or gates more or less, each with due regard to its height and to the quantity of material required, the several sieve sections may be accurately and certainly supplied.

It is occasionally desirable to feed the cleaning material to one section of the sieve only, or to reduce the delivery to a small quantity; and in such case there might be an undue accumulation of such material in the trunk J. To prevent this the central tube *j* is provided, said tube serving to carry at once to the bottom of the trunk any cleaning material that may rise above the top of the central tube *j*. It will readily be seen that any material entering the top of trunk J or rising to the top of the spiral *i* will at once fall to the bottom of inner tube *j*, and continue to circulate through the trunk without entering the chest B, except as it is permitted to escape through the lateral branches *k*, in quantity regulated by valves or gates *l*.

The details of the valves may vary; a convenient and satisfactory construction being that illustrated in Figs. 5 and 6. The gate or valve proper consists of a thin plate of metal entering the lateral branch or pipe *k* through a side opening, and arranged to extend transversely across the pipe to any distance desired. To adjust and hold the gate it is provided with a screw-threaded stem *m*, which passes through a hole or lies in a notch in an arm or bracket *n*, projecting from the side of pipe *k*, thumb nuts *o*, *o*, being screwed upon said stem, and arranged to bear upon opposite sides of the supporting arm or bracket *n*. By properly setting these nuts the gate may be adjusted as desired, and the stem can be clamped fast to the bracket and thus made to hold the gate at its proper adjustment.

The base of the chest or body A is made with delivery compartments as in patent to Gray No. 559,378, into and from which the different products are delivered. The cleaning materials are delivered into certain of these compartments, with one of which the trunk J communicates by a chute or spout *p*, Figs. 1, 2 and 3. From the trunk J a horizontal trunk *q* extends around the base of the shell or chest B to such other section or sections as receive cleaning material from the sieve or sieves above. The

material entering this lateral trunk is carried along the same to the upright trunk J by the motion of chest B, and thus a continuous circulation of the material through the machine is maintained.

In Figs. 7 to 12 inclusive we have shown a modification of our invention. In this a horizontal trunk K is carried in annular form about the top of the chest or shell B and serves to convey the cleaning material to a series of outlets *r*, as shown in Fig. 7. The outlets may be mere openings through the top of chest or shell B; or they may be pipes extending to different levels within the chest. Each outlet is guarded or governed by a valve or slide *s*, of the form illustrated in Figs. 9 and 10, adjusted and held by a screw *t*. In like manner, a trunk L connects the several discharge spouts *z* through which the cleaning material is delivered, with trunk J, as indicated in Figs. 8, 11 and 12. The cleaning material is supplied to trunk J through a flexible pipe or spout M, or otherwise, and passes from trunk J to trunk K by a branch or lateral pipe *u*, Figs. 7 and 8. After a time, the cleaning material becomes so worn as to be unfit for use. To permit its ready removal in such case the trunk J is provided with a removable bottom or gate N, Figs. 1 and 2, which being removed or opened, permits withdrawal of any desired portion or the whole of said material. As under former constructions, so in this, the casing is made removable in sections, to give free access to the interior of the machine, and to permit withdrawal of sieve sections. It is desirable for this and other reasons to provide for the ready removal and replacement of trunk J. Accordingly we step said trunk in a casting forming the chute or spout *p*, and we provide hinged clamping hoops or bands *w*, which may be formed as parts of or attachments to the lateral branch pipes *k*, or as separate holders,—both being represented in Fig. 1. By simply turning back the clamping or binding screws *x*, the clamps are made free to open, and the trunk J may be at once removed.

Various modifications may be made in the details of the apparatus without departing from the spirit of our invention.

It will be seen that the conveyer or elevator may be in the form of a rotatable spiral, acting positively to elevate the cleaning material, and that other well known forms of elevating device may be used. While these are included within the scope of our invention and are in one sense equivalents of the fixed spiral, they are not the full or entire equivalents since they involve the application of additional power and the employment of additional devices to cause their actuation, whereas this device acts without the addition of any moving member and without any further power than is already applied to the movement of the shell or casing.

In Fig. 13 we have represented the sieve as inclining slightly downward toward its periphery, or its outer edge. This may or may not be done in practice, as deemed advisable in any given instance. When done it has the effect of causing the material to seek the circumference of the sieve, and to compensate for the increasing surface or area, due to the larger radius of the sieve. It may also be carried to such an extent as to produce an accumulation of the material in that part of the sieve. It is to be understood, however, that the matter of inclining the sieve radially is wholly optional with the constructor and is not essential to our invention or to the successful use of the machine.

In the foregoing description we have used the term "inclined sieve or screen" as including both a spiral surface of continuous inclination and unbroken surface, and of a series of stepped horizontal planes, one above and adjoining another; in other words, the term is designed to include both the construction more particularly shown in the patent of William D. Gray, and that more particularly set forth in the patent to John G. Hintz, Jr., both hereinbefore cited.

In using the term "circular path" we have not meant to restrict ourselves to a movement in a strictly circular path, since it is possible to get good results by a movement in an elliptical or angular path, provided the movement approximates a circular movement. So, too, the casing and the spiral sieve, or screen within the same, may be of other than circular form, though avoidance of angles renders such circular form advantageous.

It will be observed upon referring to Fig. 1, that the chest B which is moved by alined cranks at its upper and lower ends stands between upper and lower counterbalances E and F. This is important for the reason that in theory and practice, the center of a balance wheel and the center of the load should be diametric, in order to make the machine balance properly. So here, it is important that the counterweights be above and below the casing and its contained sieve and the load thereon, in order that the center of the counterbalance, treating the two members E and F as constituting in effect one counterbalance or balance wheel, may be or be made diametric with the center of the load. By reason of this construction and arrangement, which we believe has never before been adopted in machines of this class, we are enabled to balance the machine so perfectly as to render unnecessary the use of a brace.

It will be observed that by reason of the spiral construction here shown, both as to

the sieve or screen and as to the elevator, we are enabled to dispense with wings, blades, shoulders, ledges, pockets and the like, to aid in the feeding of the material. Such devices for positively engaging, holding, and throwing the material are objectionable in that they tend to break up the stock and to produce a violence of action and a degree of attrition which is not produced with the use of our machine. It will be observed too, that by reason of the circular spiral arrangement, the movement of the material is a continuous movement and not a series of alternating impulses and rests or stoppages; nor is the material under our construction thrown against or engaged or struck by shoulders, blades, ledges or the like.

Having thus described our invention, what we claim is:

1. In a bolting, sifting or grading machine, the combination with a circular sieve or sieves, inclined from the receiving to the delivery end, of means for imparting a gyratory motion thereto in a horizontal plane, a circular helical elevator movable in a circular path with said sieve and serving to elevate cleaning material from a lower to a higher level in the machine through the motion given said material by such horizontal gyratory movement.

2. In combination with a circular helical sieve, means for bodily moving the same in a circular path in a horizontal plane, and an elevating device attached to and movable with the sieve, and consisting of a circular helical conducting channel adapted to take cleaning material from the tail or lower end of the sieve and to return the same continuously to the head or upper end thereof, through the motion imparted to the sieve and to the device.

3. In combination with a circular helical sieve and with means for imparting a gyratory motion thereto in a horizontal plane, granular cleaning material placed upon the sieve to clear its meshes, and a circular helical elevator extending from a lower part of the sieve toward its head or upper part thereof and movable with the sieve and serving by reason of such motion to return the cleaning material from said lower to said higher point.

4. In combination with a circular helical sieve, a casing, a trunk or pipe extending from a higher to a lower part of said casing and communicating with spaces above and below the sieve, an inclined helical plate or strip within said trunk or pipe, and means for bodily moving the sieve and trunk horizontally in a substantially circular path, whereby cleaning material placed upon the sieve and delivered by it to the lower part of said trunk may be elevated through said trunk and delivered again upon the sieve.

5. In combination with a helical sieve winding in one direction from a higher to a lower level and with a casing therefor, a pipe extending from said lower toward said upper part of said sieve, a fixed plate winding horizontally within said pipe from its lower end to a point at or near its top in a direction the reverse of that in which the sieve winds, branch pipes connecting the said pipe with the sieve casing at or near the upper and lower ends of said pipe, and means for horizontally moving said sieve and pipe in a substantially circular path.

6. The combination of a helical sieve winding in one direction, a casing therefor, a fixed helical elevator winding in a reverse direction, and means for bodily moving said sieve and said elevator horizontally in a substantially circular path whereby stock and cleaning material are caused to descend the sieve, and cleaning material is caused to ascend the elevator.

7. In combination with a casing and a helical sieve therein, means for moving said casing and sieve circularly in a horizontal plane, a pipe or trunk carried by said casing and provided with branch pipes connecting with said casing, valves applied to said branch pipes whereby cleaning material placed upon said sieve and delivered to the lower part of said trunk may be elevated through said trunk and delivered upon said sieve at different points in any desired quantities.

8. In combination with a shell or casing and a helical sieve therein, an upright cylindrical trunk communicating with said casing at a plurality of different levels, a fixed helical plate within said trunk, and means for moving said casing in a substantially circular horizontal path.

9. In combination with a casing and a helical sieve therein, a trunk carried by said casing, an open ended central tube within said trunk, a fixed helical plate winding between the wall of said trunk and said central tube, branch pipes connecting said trunk with the interior of said casing, and means for moving said casing in a substantially circular horizontal path.

10. In combination with a casing, a sieve therein, means for moving said casing and sieve in a circular horizontal path, and a trunk detachably secured to said casing and provided with pipes connecting thereto, and having a fixed internal helical plate, said helical plate serving as an incline over which cleaning material may be carried upwardly to an upper portion of said sieve, through momentum due to the motion of the structure as a whole.

11. In combination with a casing containing a helical sieve, a trunk communicating with said casing, an elevator within said trunk, and means for detachably securing said trunk to said casing.

12. In combination with a casing and a trunk communicating therewith, a fixed helical plate within said trunk, a trunk extending horizontally at the base of said casing and communicating therewith for the reception of cleaning material therefrom, and communicating with said trunk for delivery of cleaning material thereto, and means for producing a gyratory motion of said casing and trunk, whereby said cleaning material is caused to ascend said trunk for delivery to said casing.

13. In combination with a casing, an upright trunk, a helical plate within said trunk, a trunk extending horizontally at the top of said casing and having outlets for delivery of cleaning material to said casing from different portions thereof and connecting to said upright trunk, and a trunk extending horizontally at the base of said casing and having inlets for the reception of cleaning material from different portions of said casing and connecting to said upright trunk for delivery of said cleaning material thereto.

14. In combination with a casing and a sieve therein, an elevator trunk, branch pipes connecting said trunk and said casing, valves or gates controlling said branch pipes, and means for adjusting and holding said gates or valves.

15. In a bolter, the combination of a shell or body of regular prismatic structure, rods or hangers for supporting said shell or body, alined cranks or eccentrics for imparting gyratory movement thereto in a horizontal plane, said shell or body having its side walls symmetrically placed with reference to the common axis of said alined cranks and to the axis of said prismatic structure, a helical sieve structure symmetrically disposed within said shell or body, counterbalances located respectively above or below said shell or body, and a separate bearing in said shell for said alined cranks closely adjacent each of said counterbalances.

16. The combination of a shell, means for mounting said shell for horizontal gyration, a vertical crank structure for gyrating said shell, a helical sieve structure symmetrically disposed within said shell, counterbalance weights for said shell above and below same, said shell being of prismatic structure and having its side walls symmetrically placed with reference to the axis of said crank structure, and a separate bearing in said shell for said crank structure closely adjacent each of said counterbalance weights.

17. The combination of a shell, means for mounting said shell for horizontal gyration, a vertical crank structure rotatable in said shell, a helical sieve structure symmetrically disposed within said shell, counterbalance weights connected to said crank structure and located above and below said shell, whereby said shell is counterbalanced during gyration, said shell being prismatic in structure and having its side walls symmetrically placed with reference to the axis of said crank structure, and bearings in said shell for said crank structure where the same is rotatable therein, each of said bearings being closely adjacent to one of said counterbalance weights.

In witness whereof we hereunto set our hands in the presence of two witnesses.

WILLIAM D. GRAY.
JOHN G. HINTZ, JR.

Witnesses:
B. T. LEUZARDER,
GEO. H. BURNHAM.