US 20180146960A1

(19) **United States**

(12) **Patent Application Publication**

(10) **Pub. No.: US 2018/0146960 A1**

(43) **Pub. Date: May 31, 2018**

Shelton, IV et al.

(54) **TORQUE OPTIMIZATION FOR SURGICAL INSTRUMENTS**

(71) Applicant: **Ethicon LLC**, Guaynabo, PR (US)

(72) Inventors: **Frederick E. Shelton, IV**, Hillsboro, OH (US); **David C. Yates**, West Chester, OH (US); **Emily A. Schellin**, Cincinnati, OH (US); **Jeffrey S. Swayze**, West Chester, OH (US)

(21) Appl. No.: **15/809,643**

(22) Filed: **Nov. 10, 2017**

Related U.S. Application Data

(63) Continuation of application No. 14/553,293, filed on Nov. 25, 2014, which is a continuation of application No. 13/974,206, filed on Aug. 23, 2013, now abandoned.

Publication Classification

(51) **Int. Cl.**

A61B 17/068	(2006.01)
A61B 17/072	(2006.01)
A61B 17/10	(2006.01)
A61B 17/00	(2006.01)

(52) **U.S. Cl.**

CPC ***A61B 17/068*** (2013.01); ***A61B 17/07207*** (2013.01); ***A61B 17/105*** (2013.01); ***A61B 17/072*** (2013.01); *A61B 2017/0019* (2013.01); *A61B 2017/00154* (2013.01); *A61B 2017/00734* (2013.01); *A61B 2017/07228* (2013.01); *A61B 2017/07271* (2013.01); *A61B 2017/00398* (2013.01)

(57) **ABSTRACT**

A control system having speed management control. The control system can be in signal communication with a battery, and the battery can be coupled to a motor. The speed management control can include a pulse width modulation circuit, which can control the duration of pulses supplied from the battery to the motor. The motor can include a primary set of coils and a secondary set of coils. The control system can direct surplus current to the secondary set of coils to maximize the torque generated by the motor.

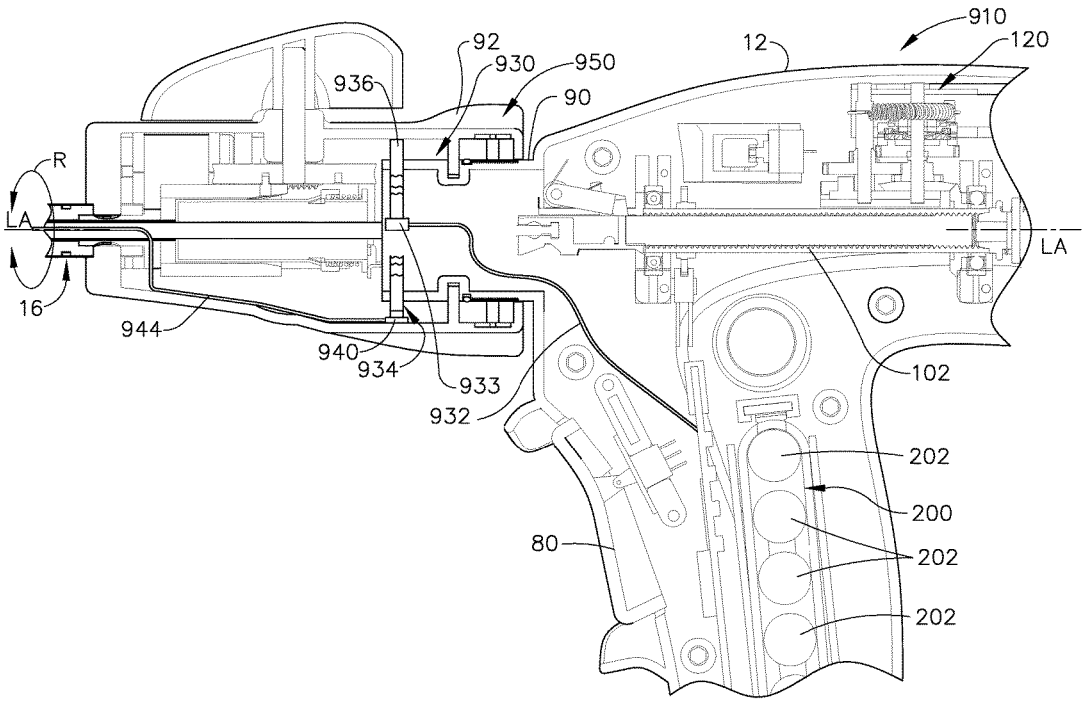

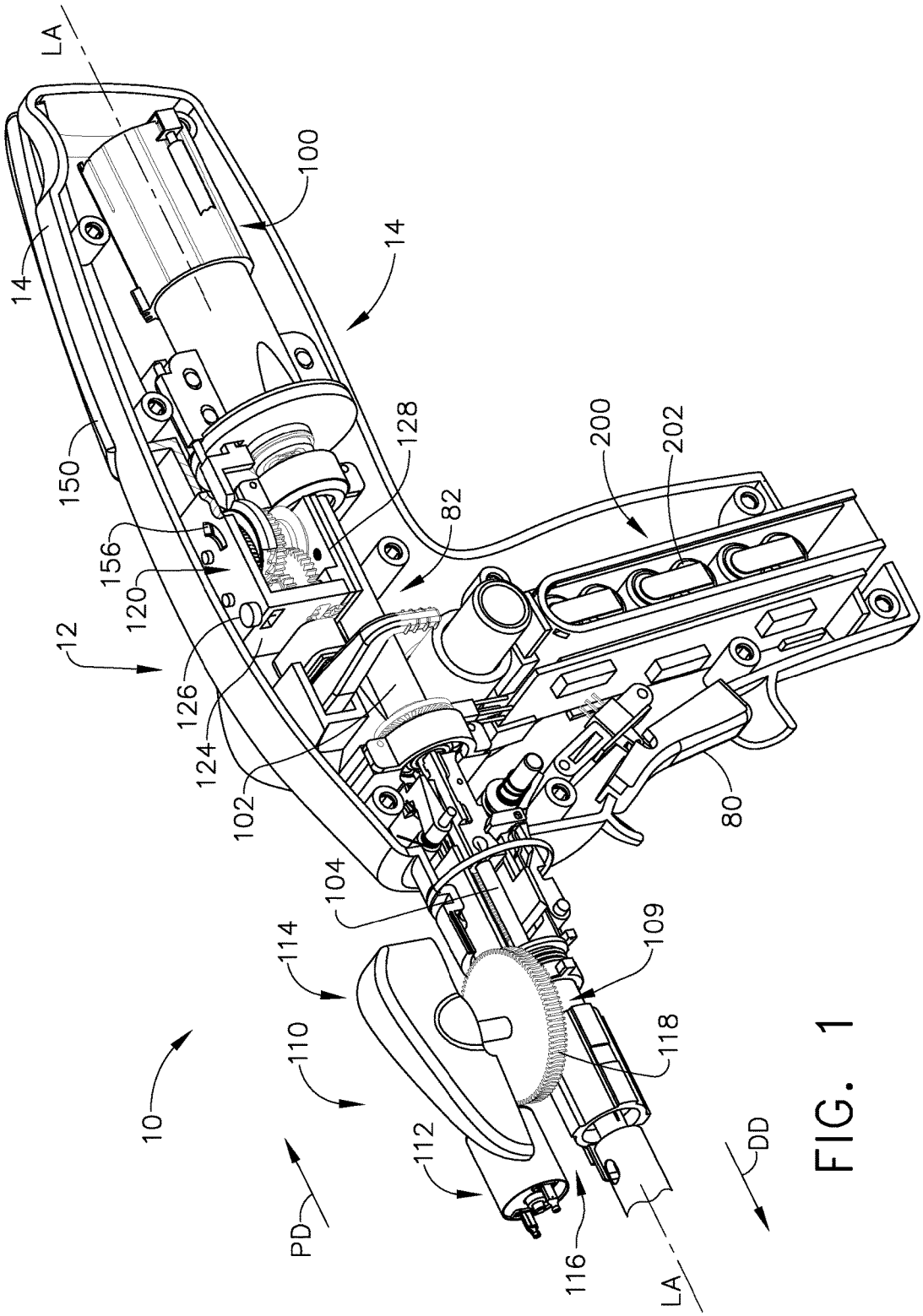
LA
100
14
14
150
128
200
202
82
156
120
12
126
124
102
80
104
114
109
110
118
10
112
PD
116
LA
DD

FIG. 1

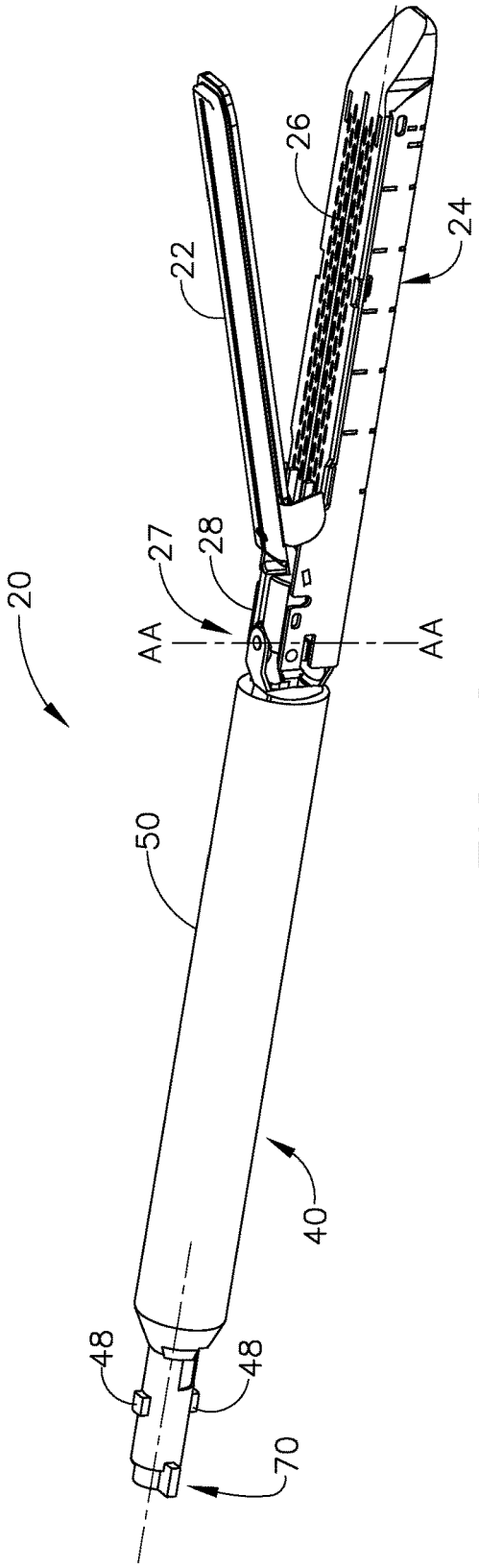

FIG. 2

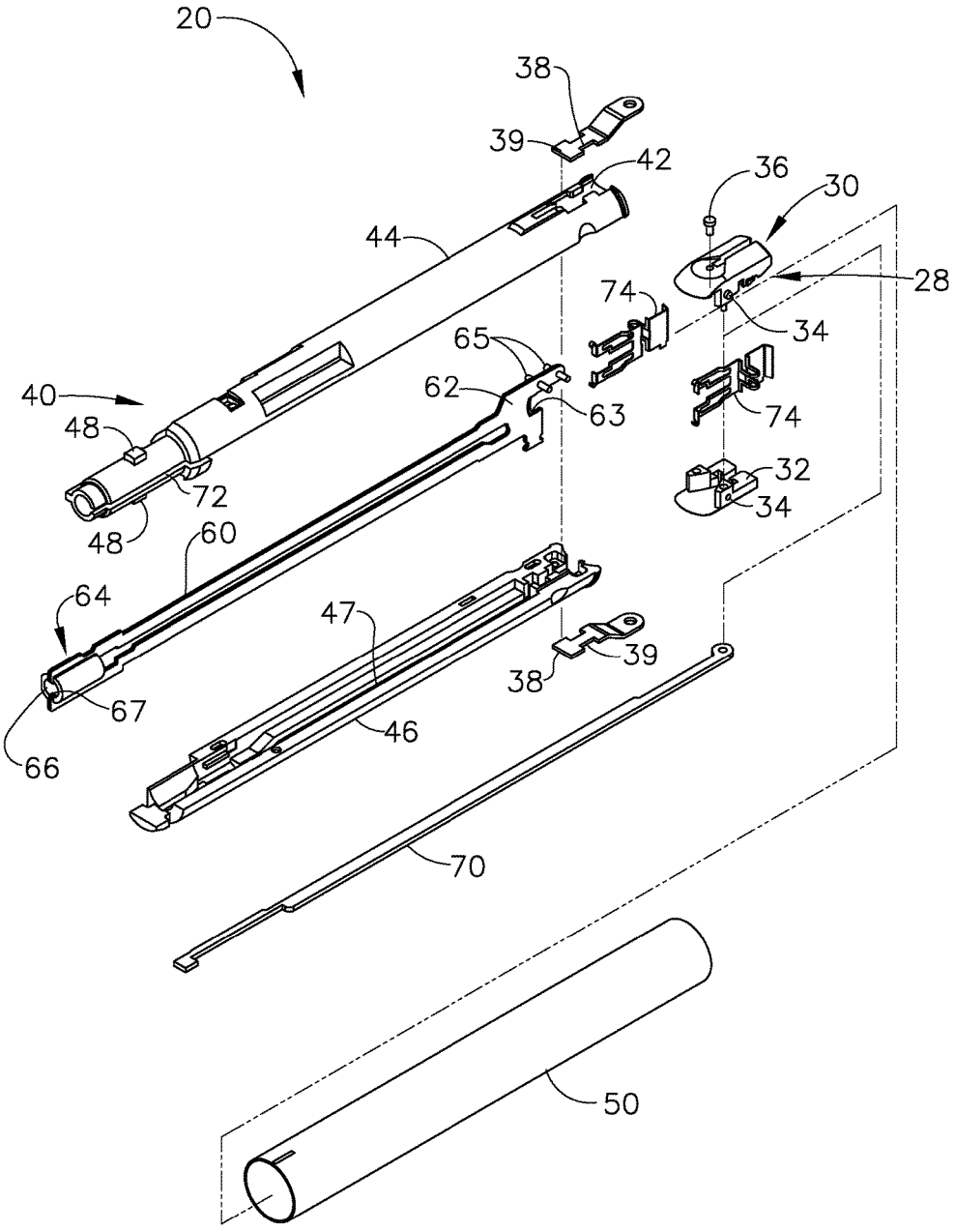
20
38
39
42
36
30
44
28
74
34
65
62
63
40
74
48
72
32
34
48
60
64
47
39
38
67
46
66
70
50

FIG. 3

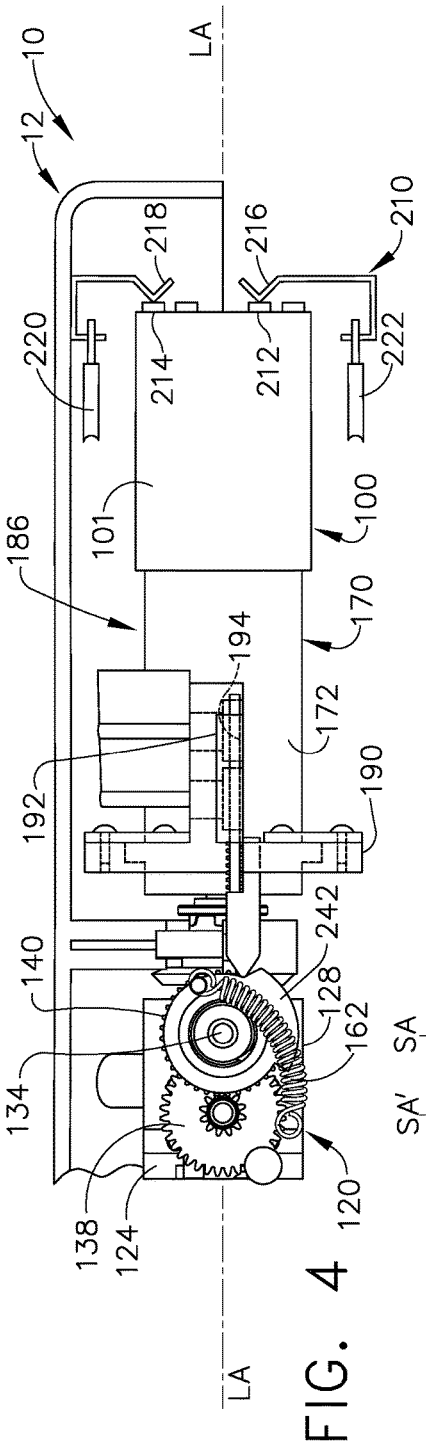
10
12
LA
218
216
210
220
214
212
222
101
100
186
170
194
172
192
190
140
242
128
162
134
120
138
124
LA

FIG. 4

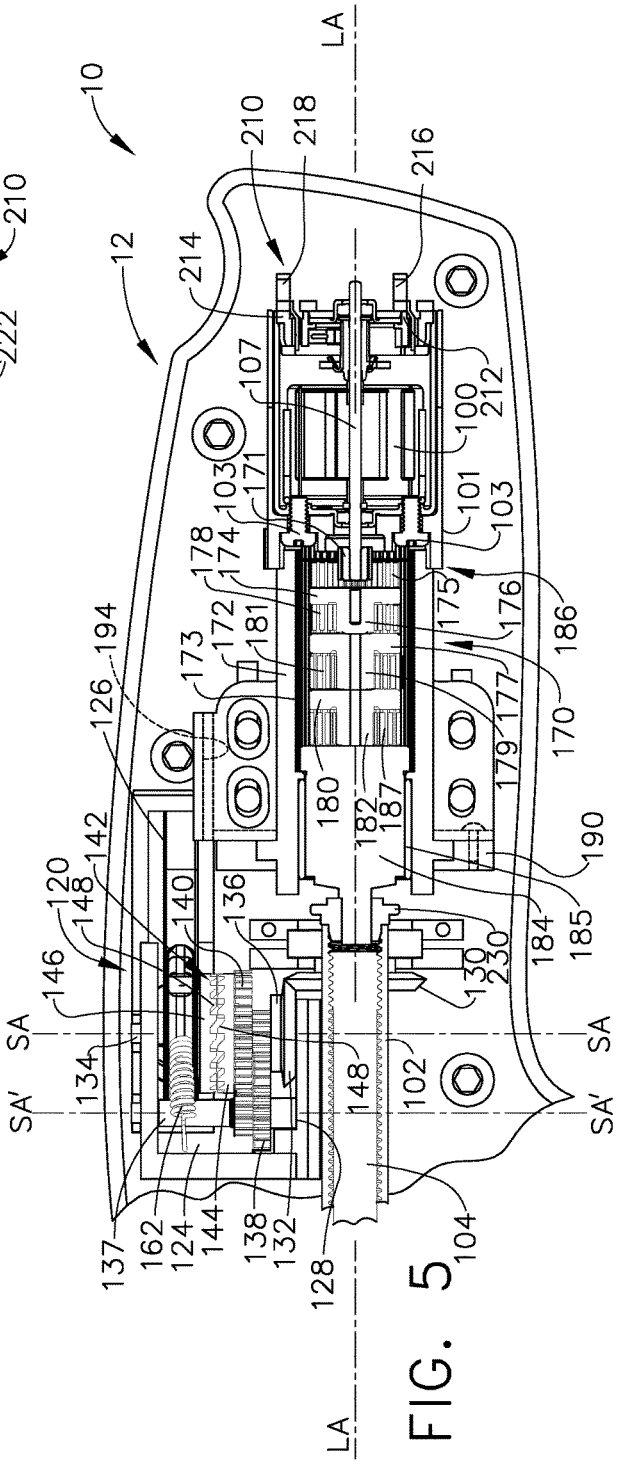
10
LA
210
218
216
12
214
107
212
100
171
103
101
103
178
174
175
176
186
172
181
173
194
126
177
170
179
180
187
182
190
142
120
148
140
136
146
130
230
184
185
SA
SA'
134
102
148
137
162
124
144
138
132
128
104
LA

FIG. 5

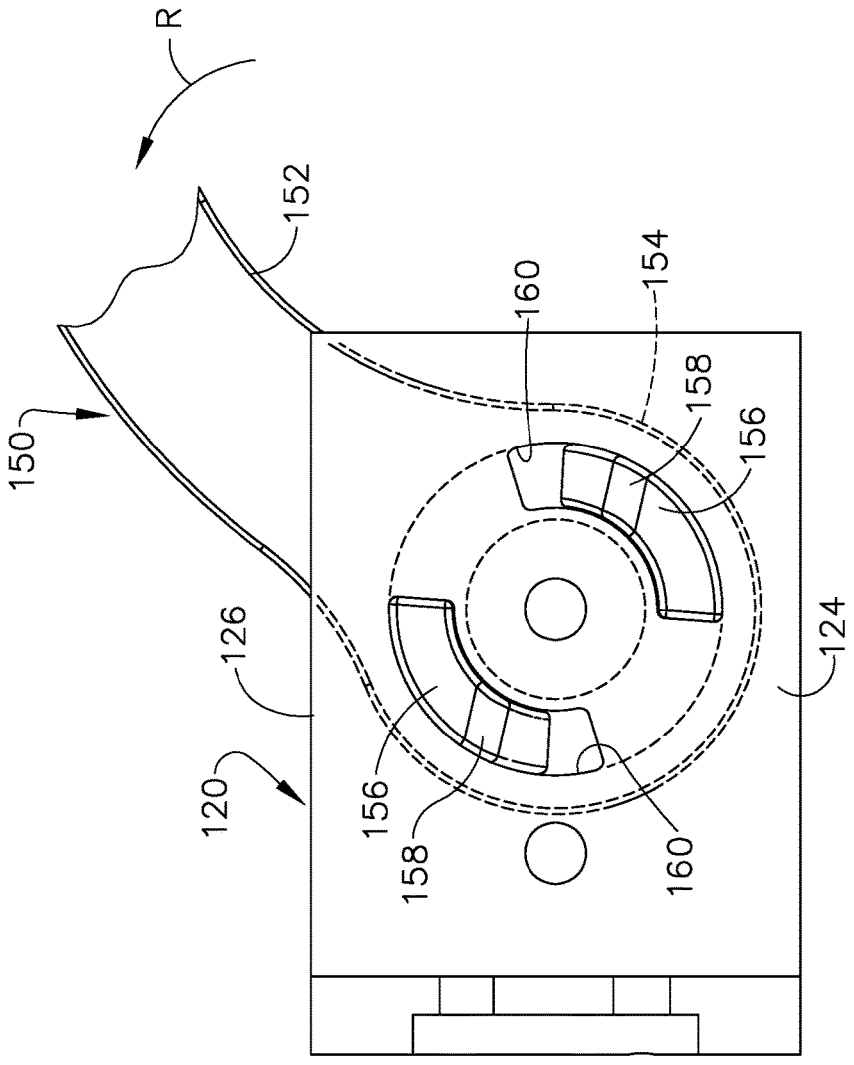

FIG. 6

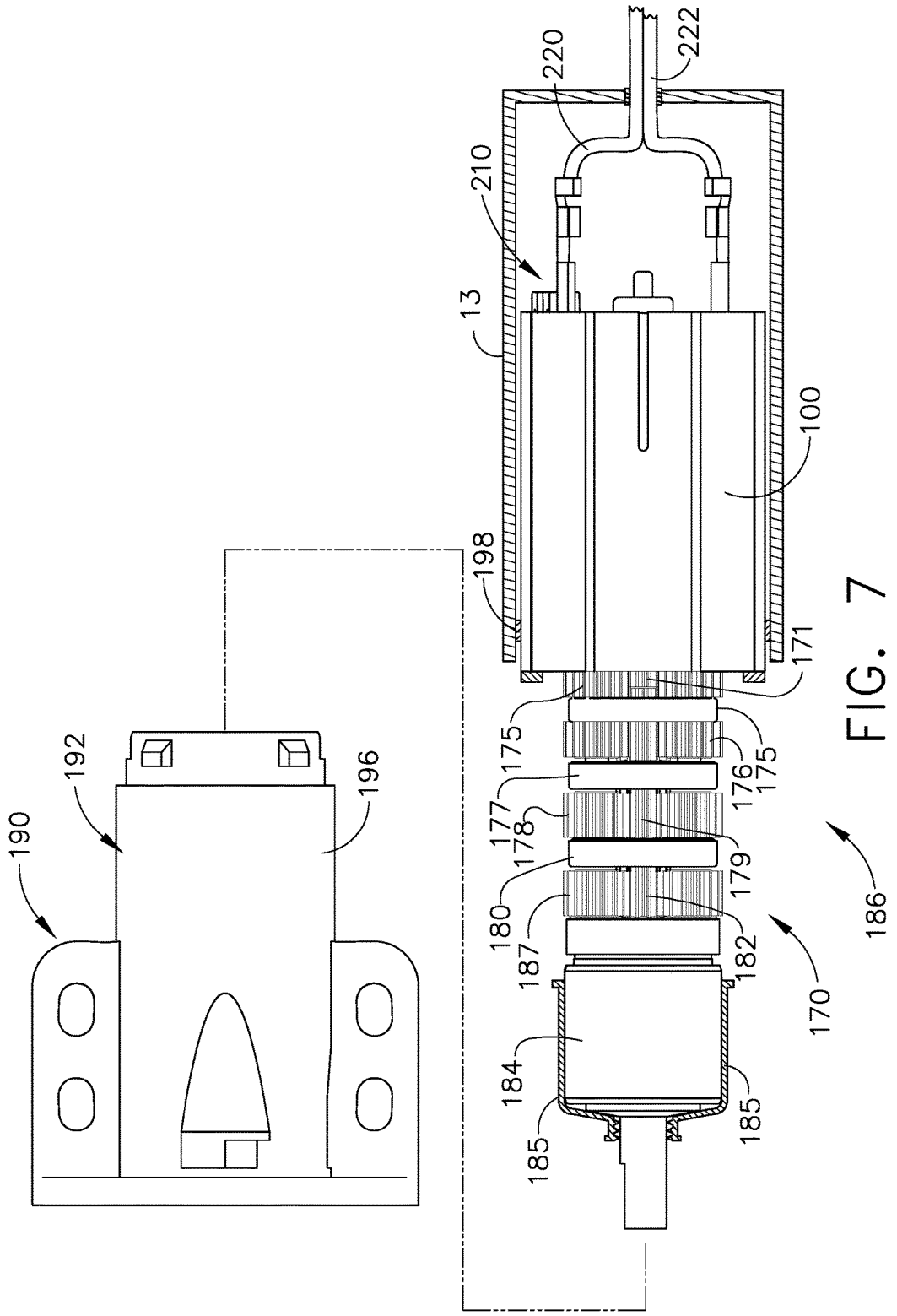
220
222
210
13
100
198
171
175
175
176
177
178
179
180
187
182
184
185
185
186
170
190
192
196

FIG. 7

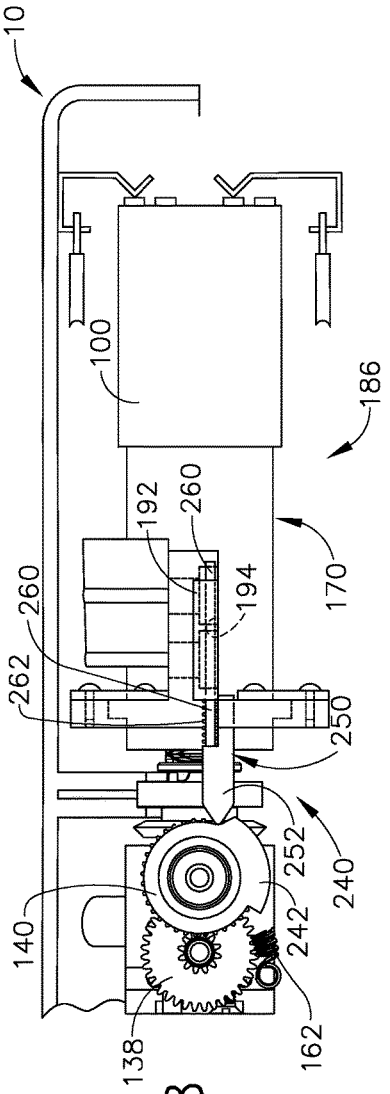

FIG. 8

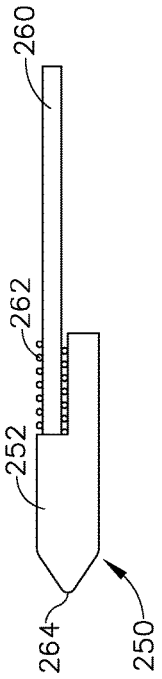

FIG. 9

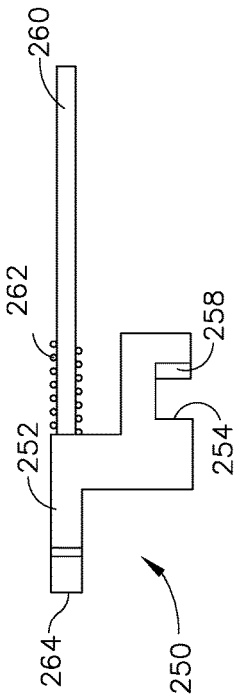

FIG. 10

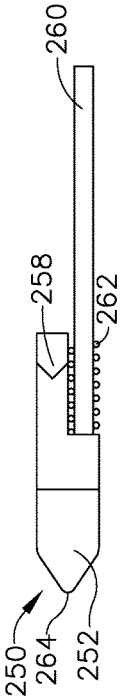

FIG. 11

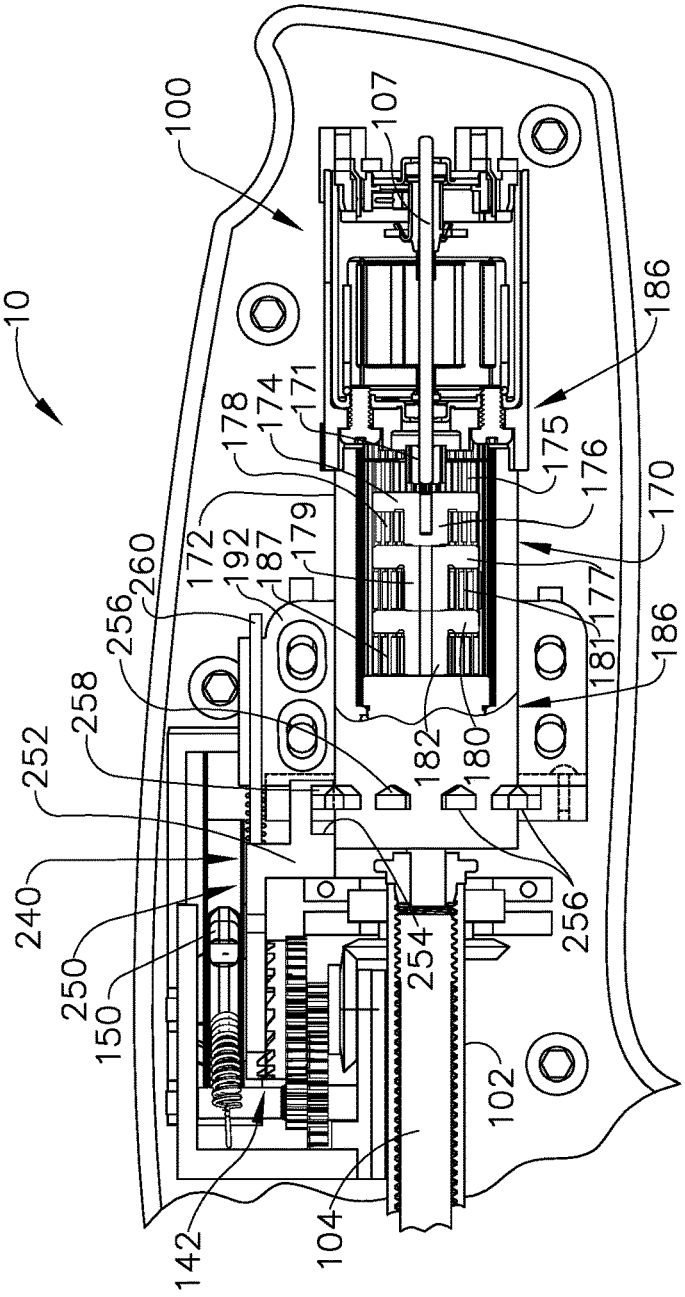
10
100
107
186
178
174
171
175
176
170
172
192
187
179
260
256
177
181
186
258
252
182
180
240
250
150
254
256
102
142
104

FIG. 13

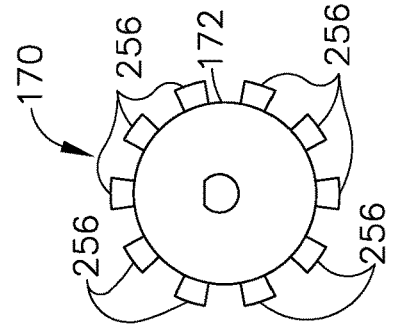
170
256
172
256
256
256

FIG. 12

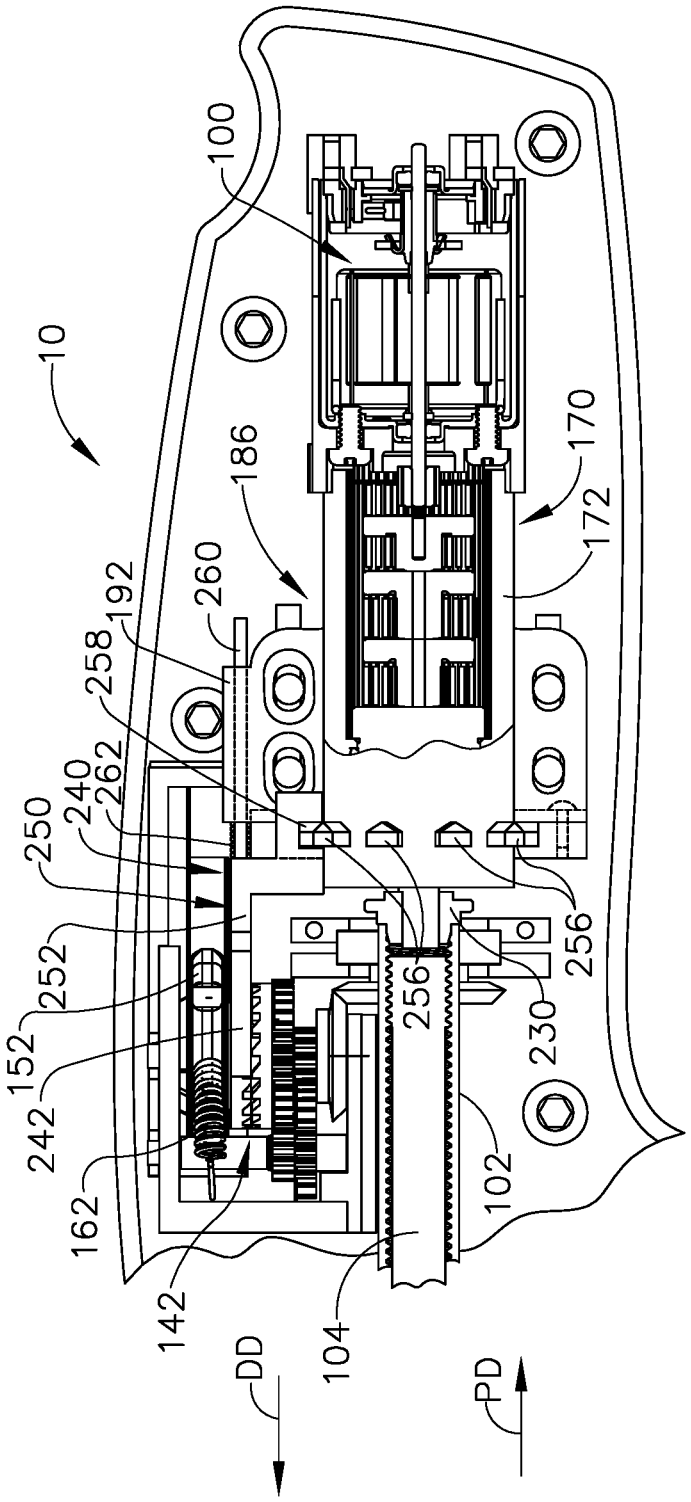
10
100
170
172
186
260
192
258
262
240
250
252
152
242
162
142
104
102
230
256
DD
PD

FIG. 14

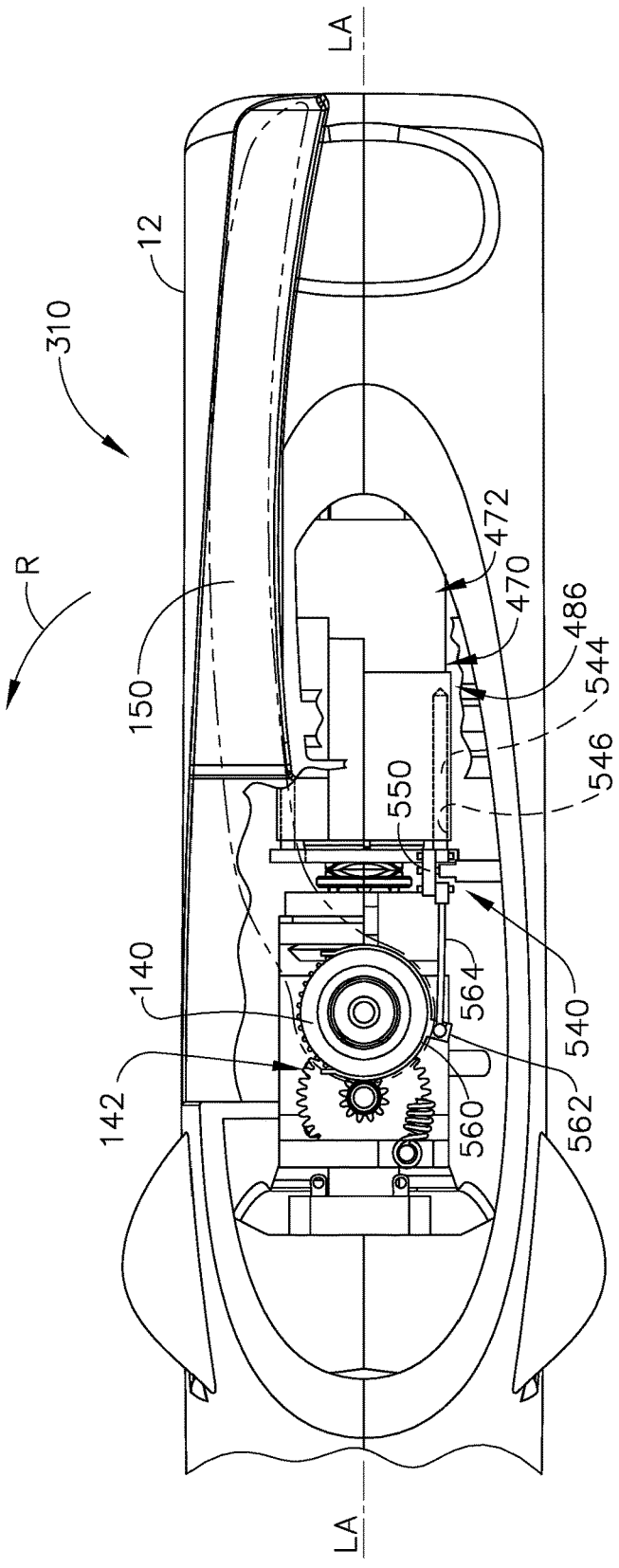

FIG. 15

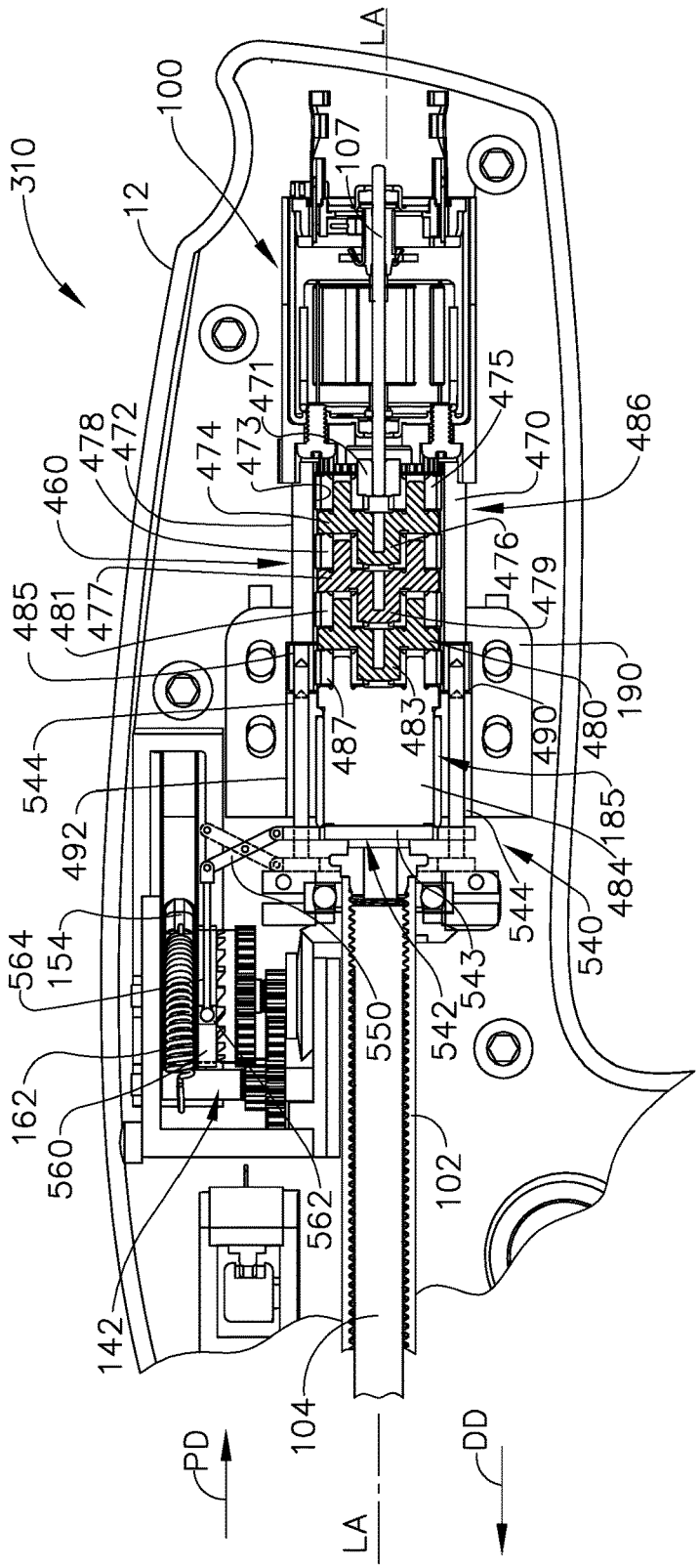
310
12
100
LA
107
471
475
473
474
472
478
460
470
486
476
479
485
481
477
544
487
483
490
480
190
492
185
484
544
540
564
154
543
542
550
162
560
562
102
142
104
PD
DD
LA

FIG. 16

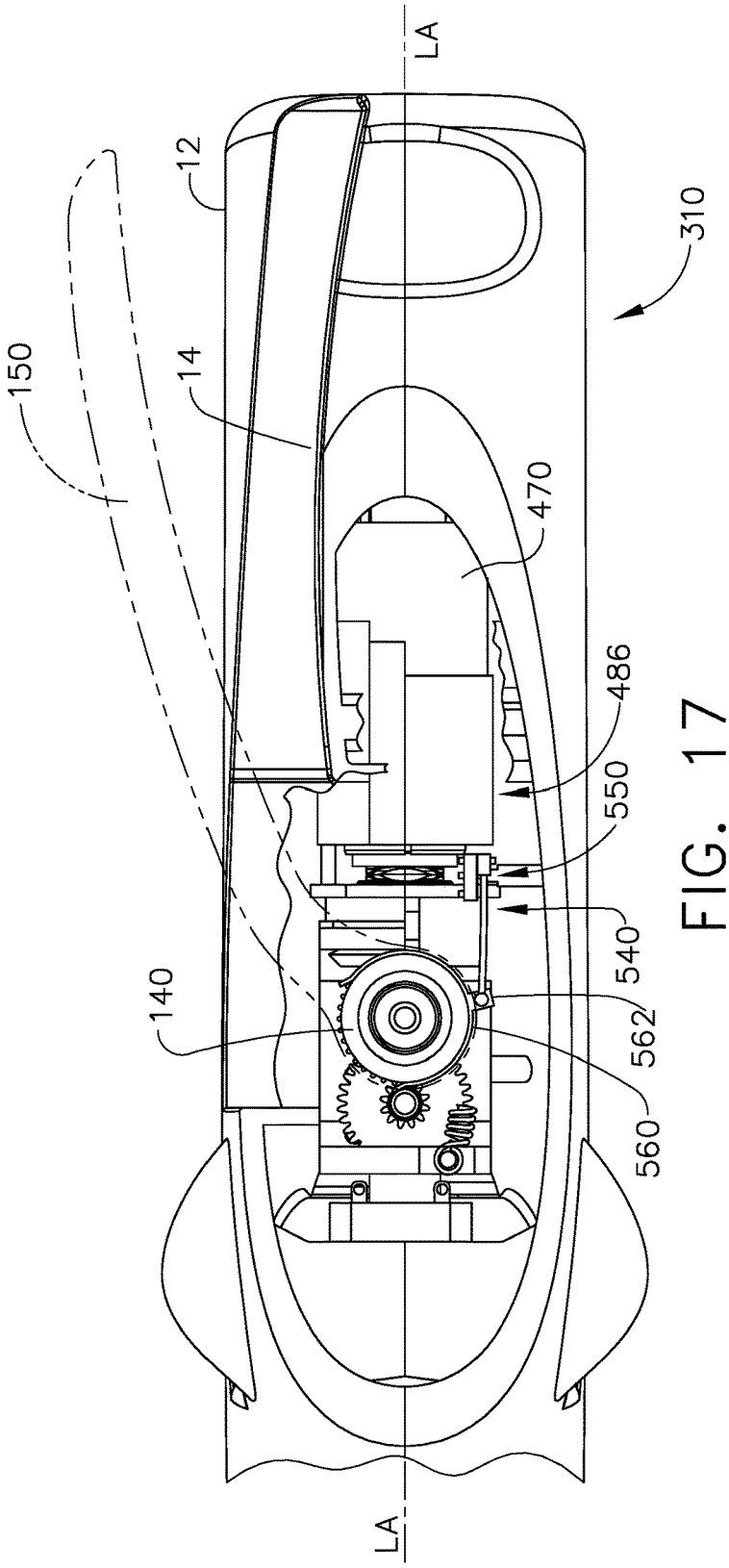

FIG. 17

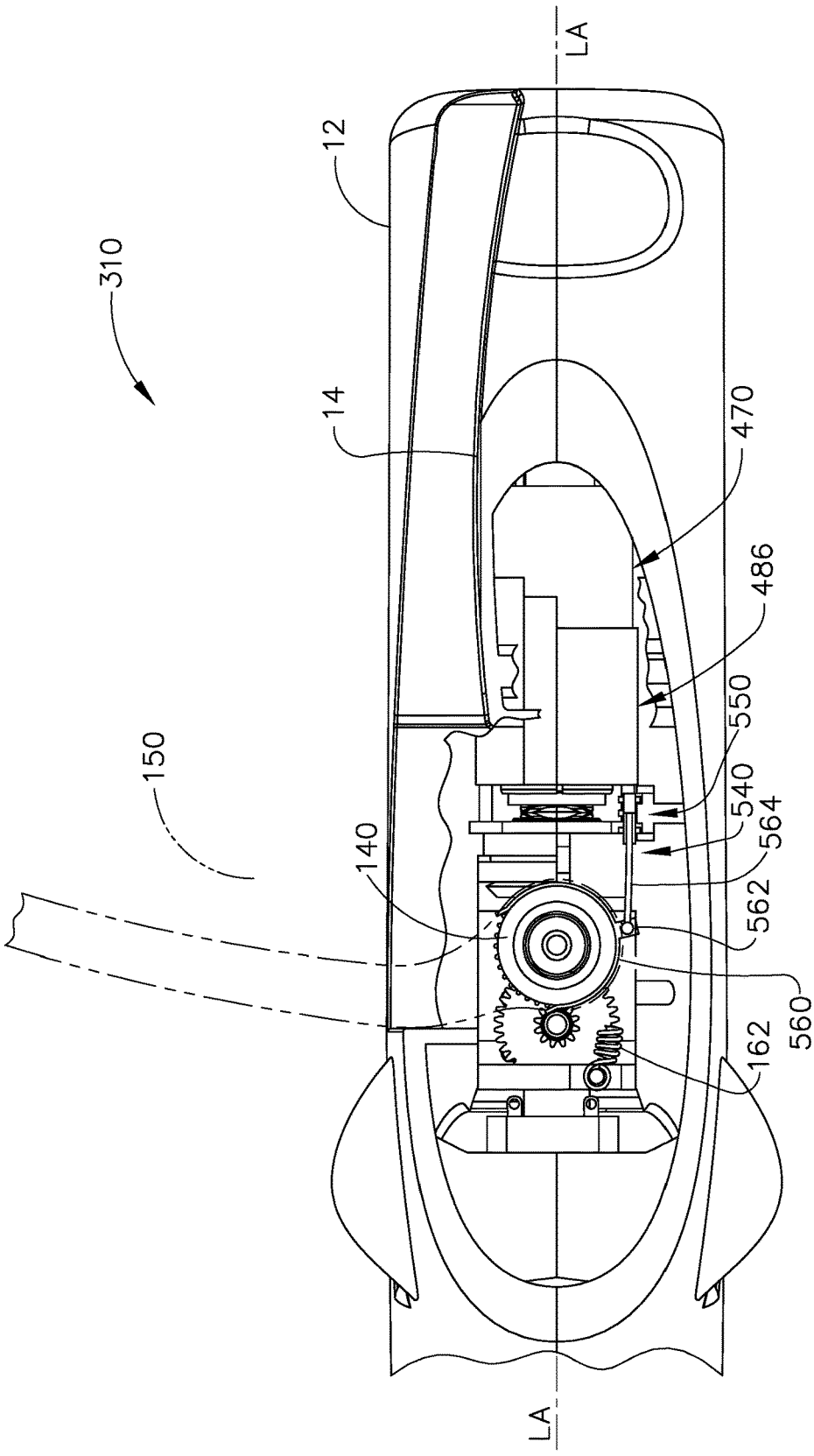

FIG. 18

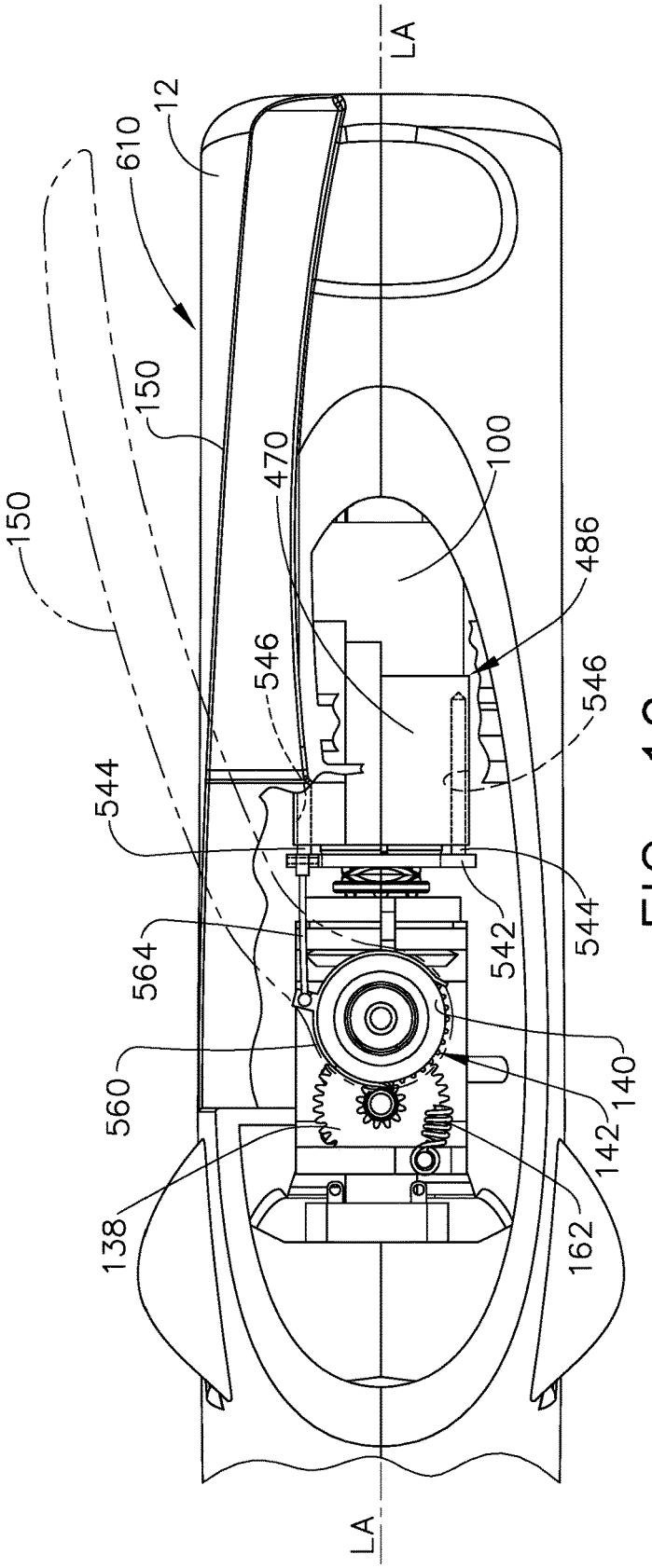
LA
12
610
150
150
470
100
486
546
546
544
544
542
564
560
140
142
138
162
LA

FIG. 19

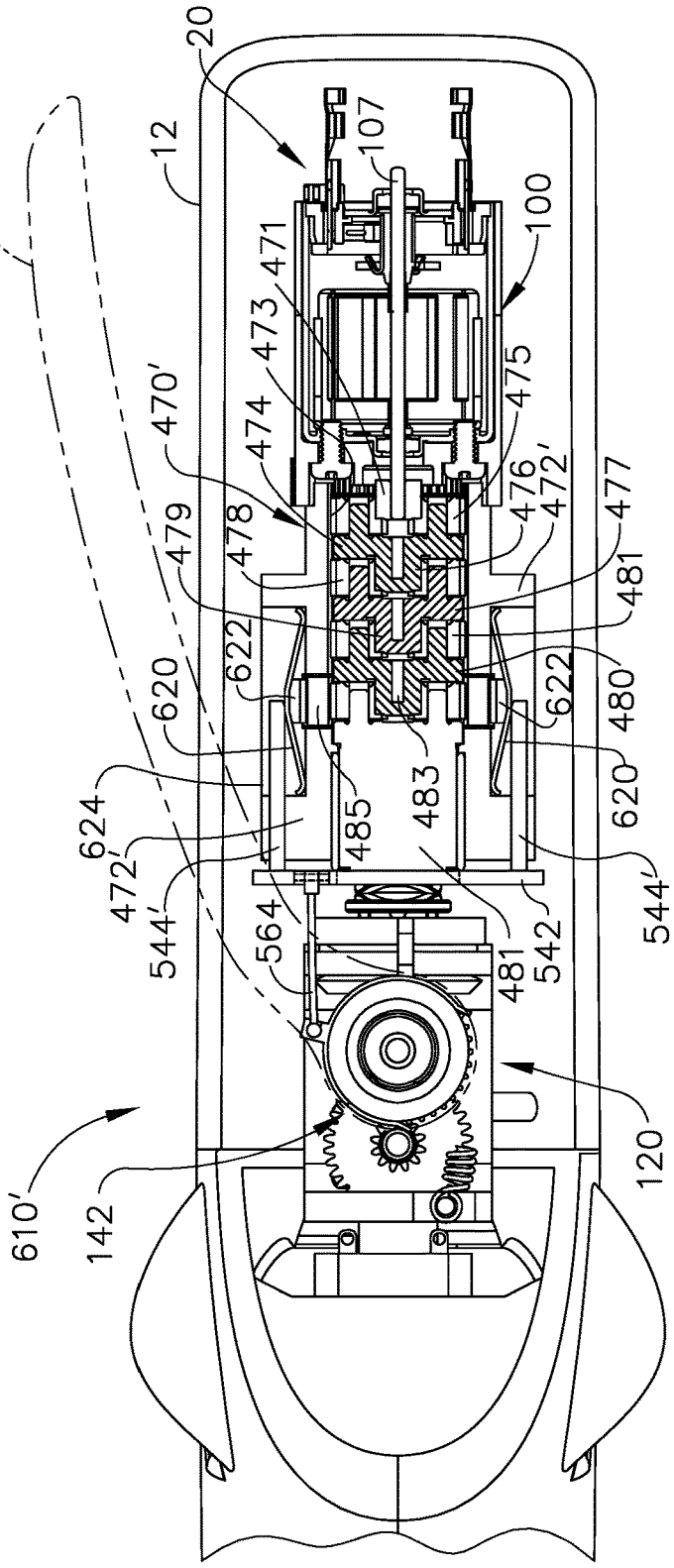
20
150
12
107
100
471
473
475
470'
474
476
472'
477
479
478
481
622
620
622
480
620
624
485
483
472'
544'
564
542
544'
481
610'
142
120

FIG. 20

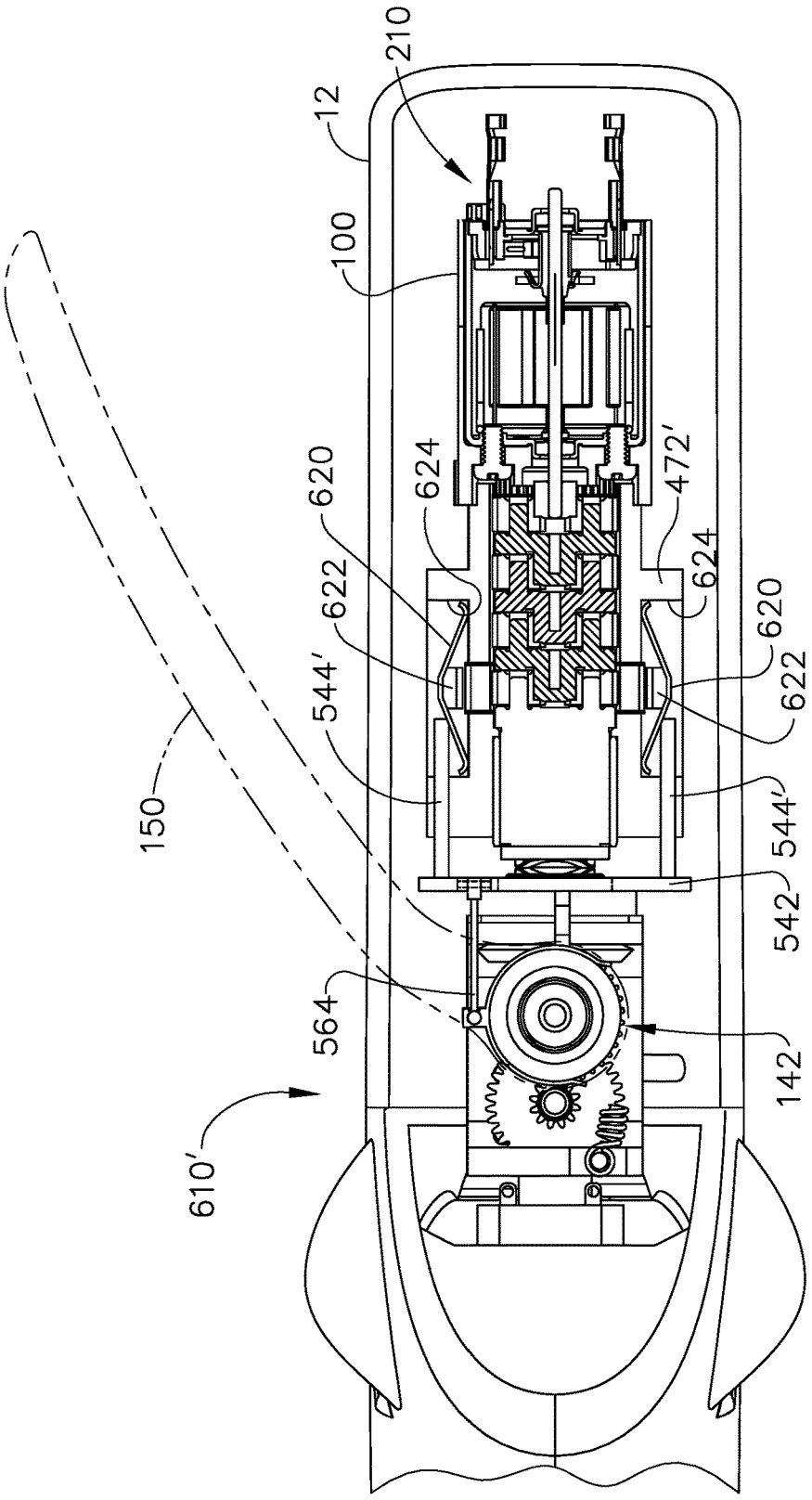
210
12
100
620
624
472'
624
620
622
544'
622
544'
150
542
564
142
610'

FIG. 21

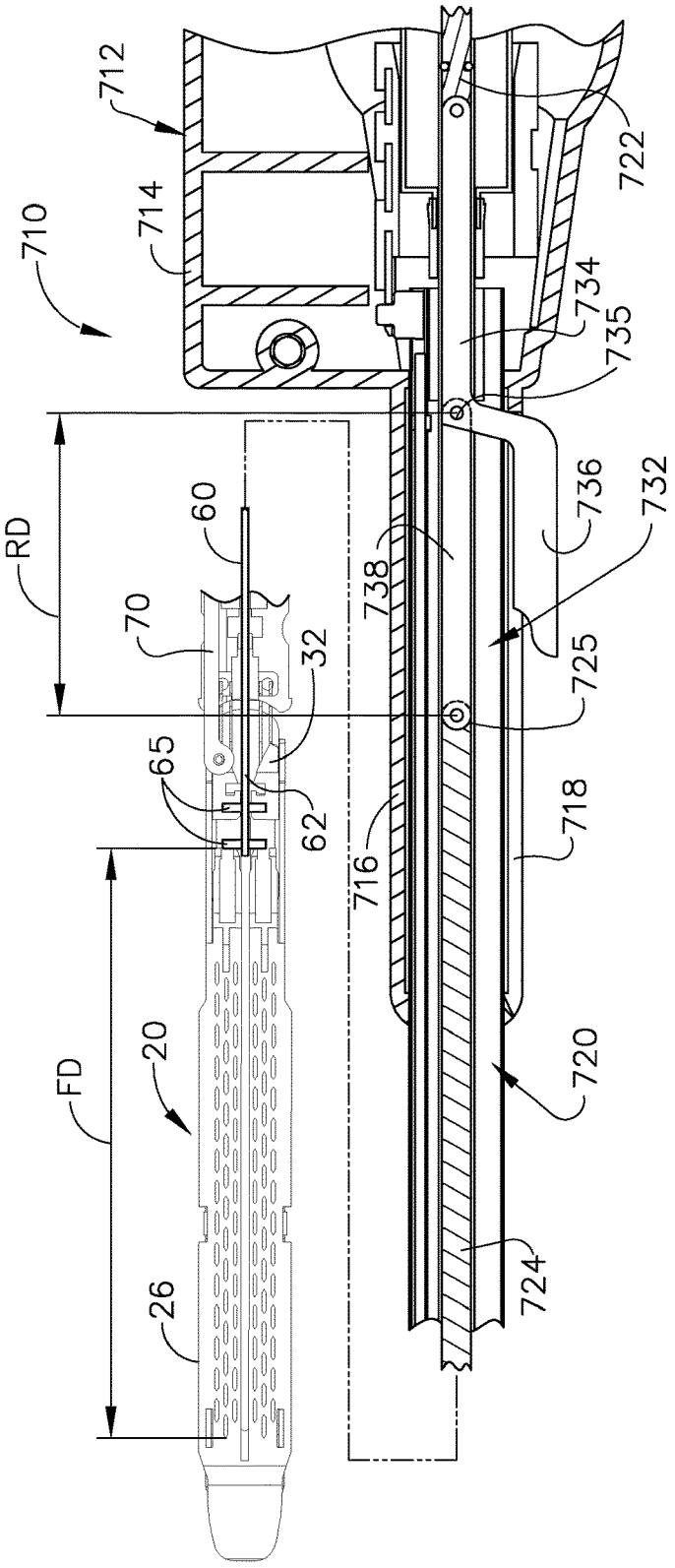
712
714
710
722
734
735
736
732
738
725
718
716
720
724
RD
60
70
32
65
62
FD
20
26

FIG. 22

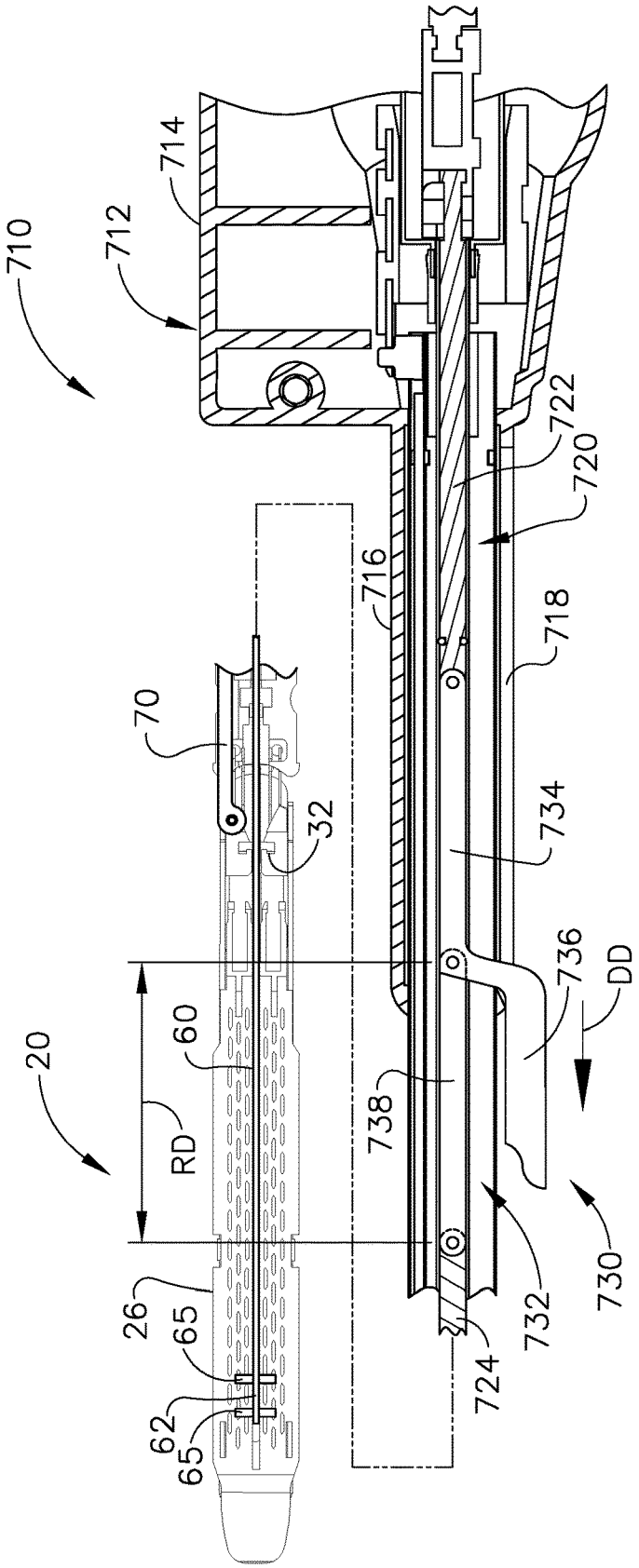
710
712
714
722
720
716
718
70
32
734
736
DD
20
60
RD
738
26
65
62
65
724
732
730

FIG. 23

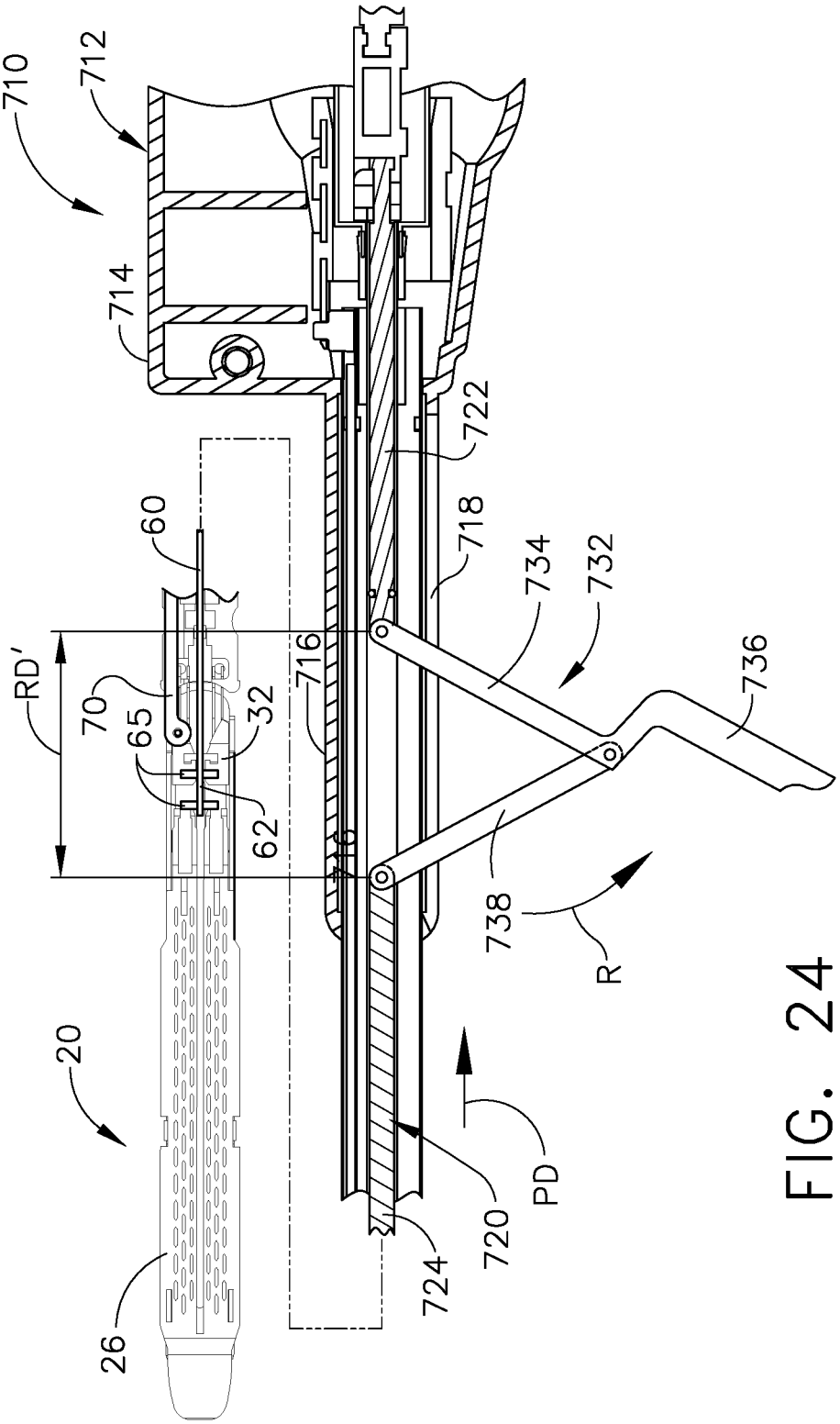
710
712
714
722
60
718
734
732
736
RD'
70
65
32
716
62
738
R
20
PD
720
724
26

FIG. 24

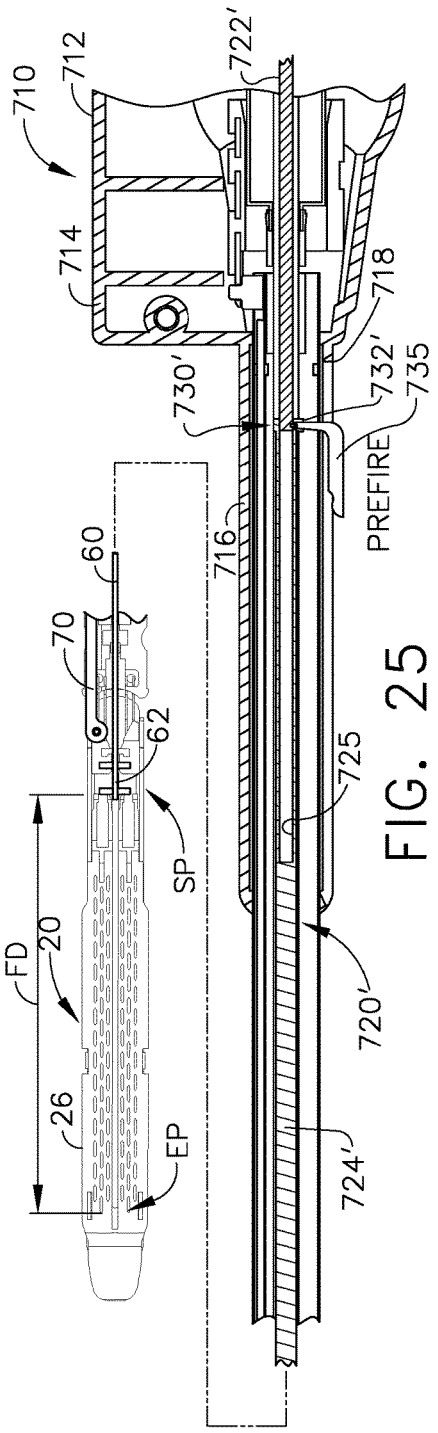
710
712
722'
714
718
730'
732'
735
PREFIRE
716
60
70
62
725
SP
FD
20
720'
26
EP
724'

FIG. 25

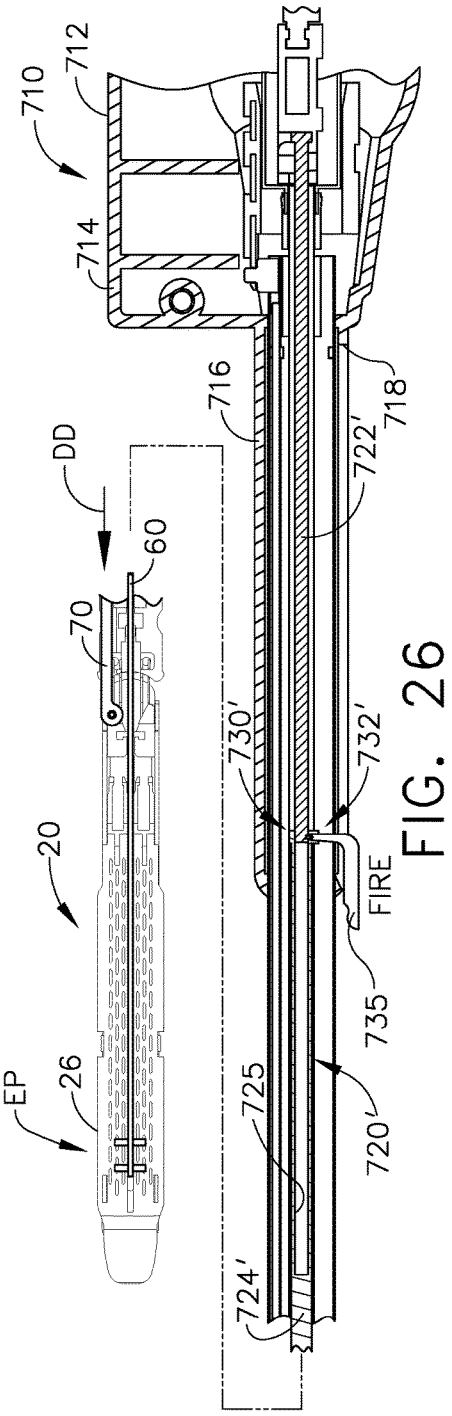
710
712
714
716
718
722'
DD
60
70
730'
732'
20
FIRE
735
EP
26
725
720'
724'

FIG. 26

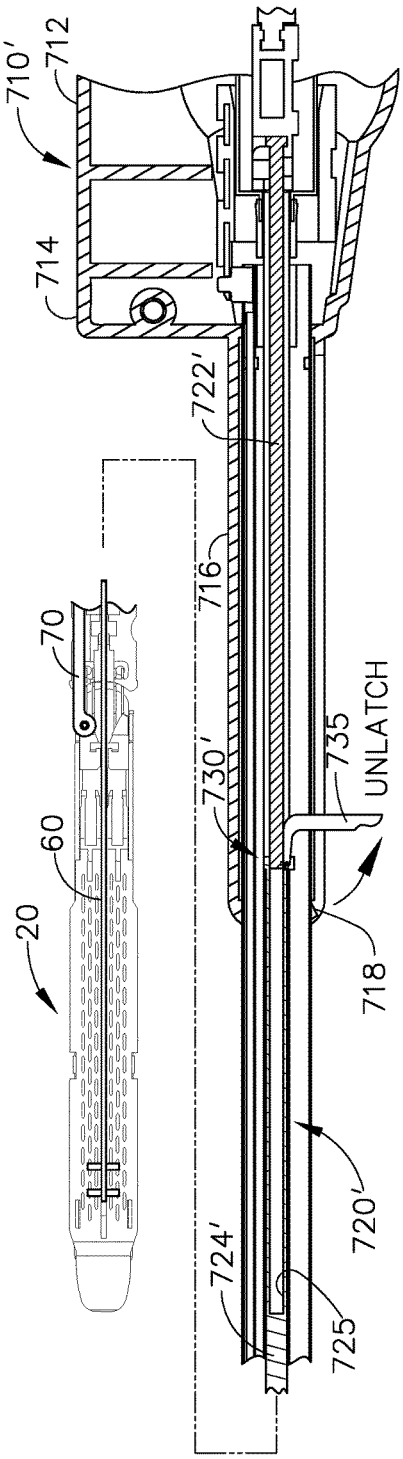
710'
712
714
722'
716
730'
735
UNLATCH
718
70
60
20
720'
724'
725

FIG. 27

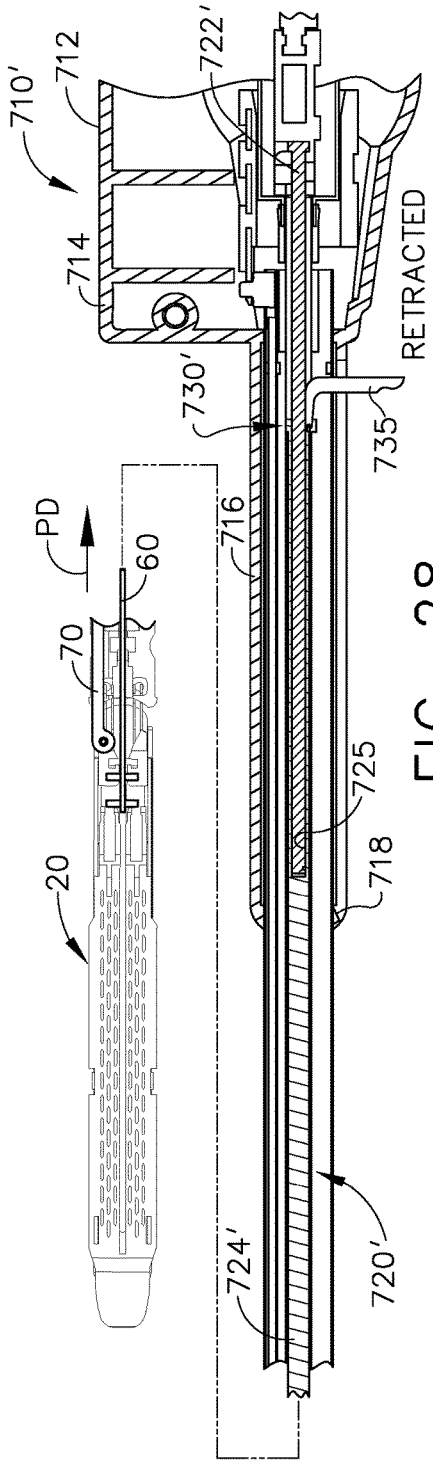
710'
712
722'
714
730'
RETRACTED
735
716
PD
60
70
725
20
718
724'
720'

FIG. 28

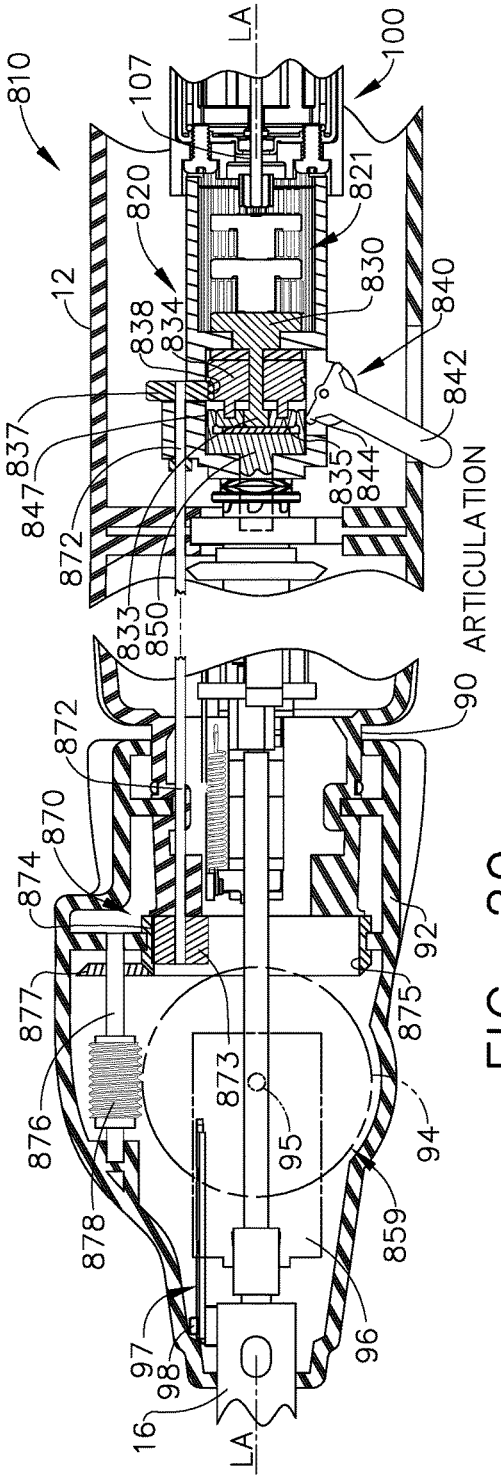
810
107
LA
100
820
821
12
838
834
830
840
837
842
847
835
844
872
833
850
ARTICULATION
90
872
870
874
92
877
875
873
876
95
94
878
859
97
98
96
16
LA

FIG. 29

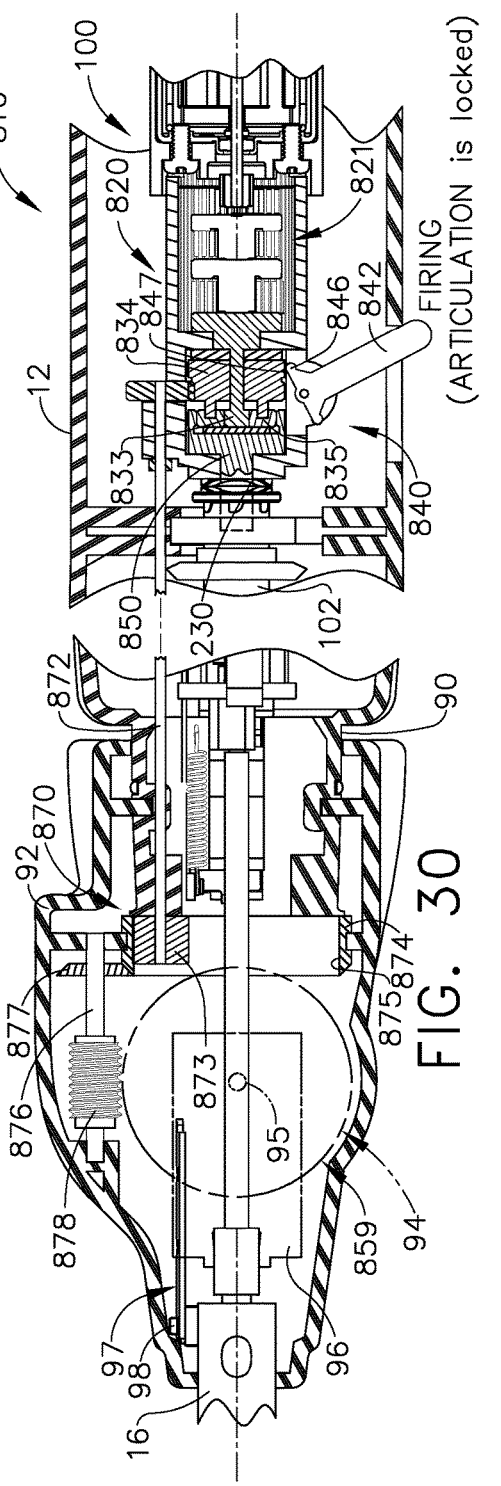
810
100
820
821
12
834
847
846
842
FIRING
(ARTICULATION is locked)
833
835
840
850
230
102
872
90
870
92
874
877
875
873
876
95
878
859
94
97
98
96
16

FIG. 30

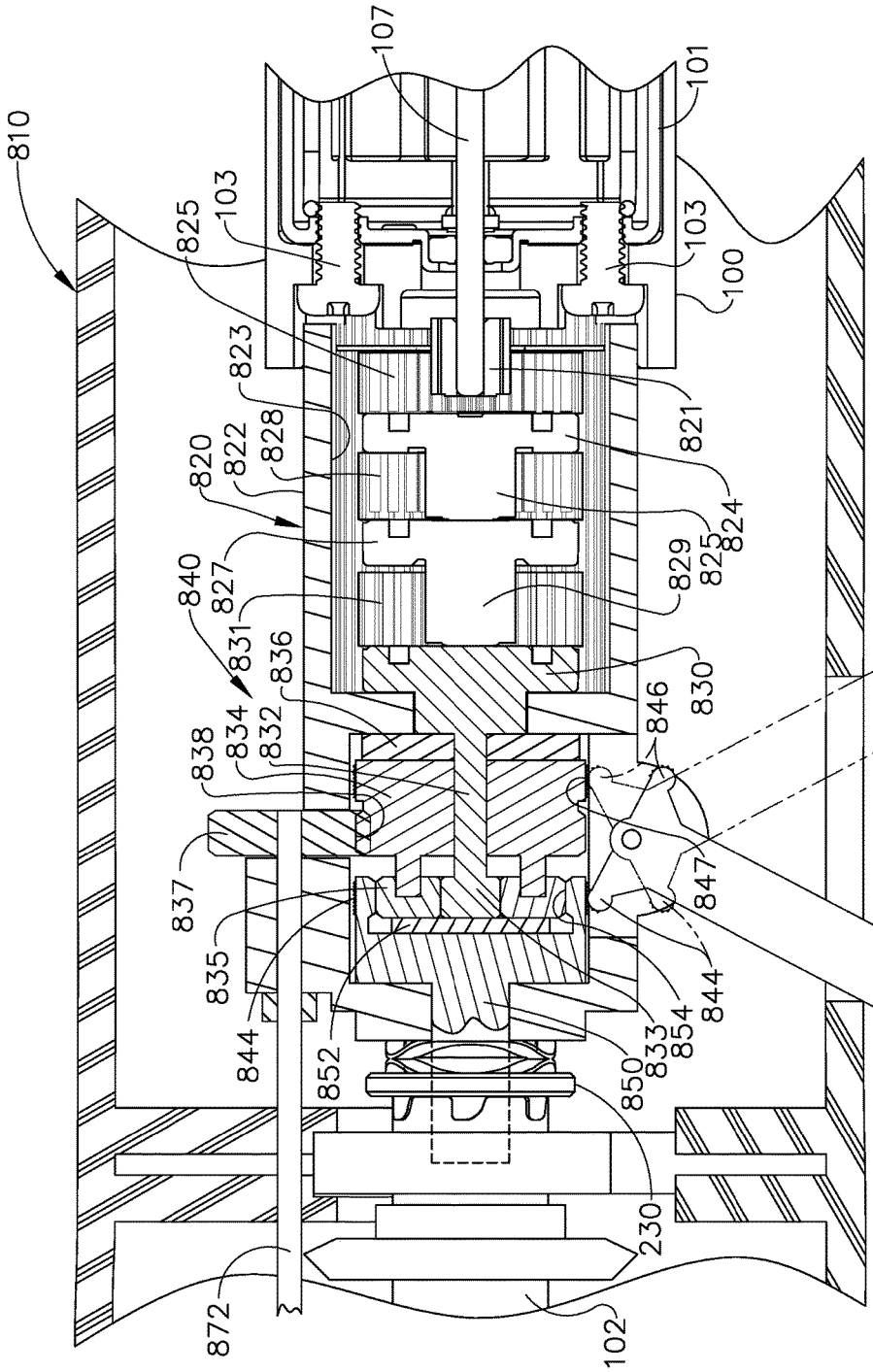
810
107
101
103
825
103
100
823
821
820
822
828
824
825
829
840
827
831
836
830
842
846
838
834
832
847
837
835
844
852
850
833
854
844
842
230
872
102

FIG. 31

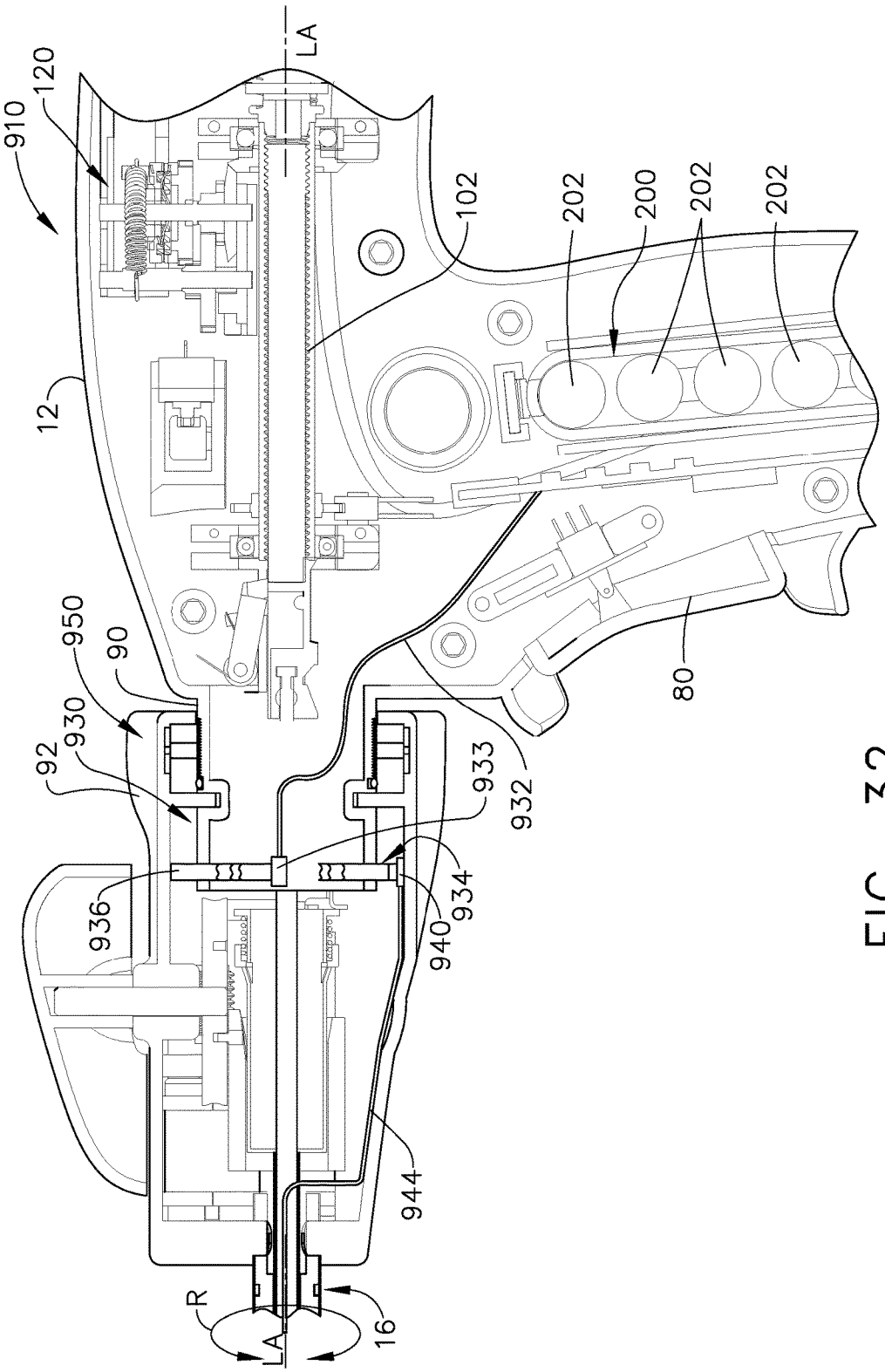
910
120
LA
102
202
200
202
202
12
950
90
930
92
933
932
80
936
934
940
944
R
LA
16

FIG. 32

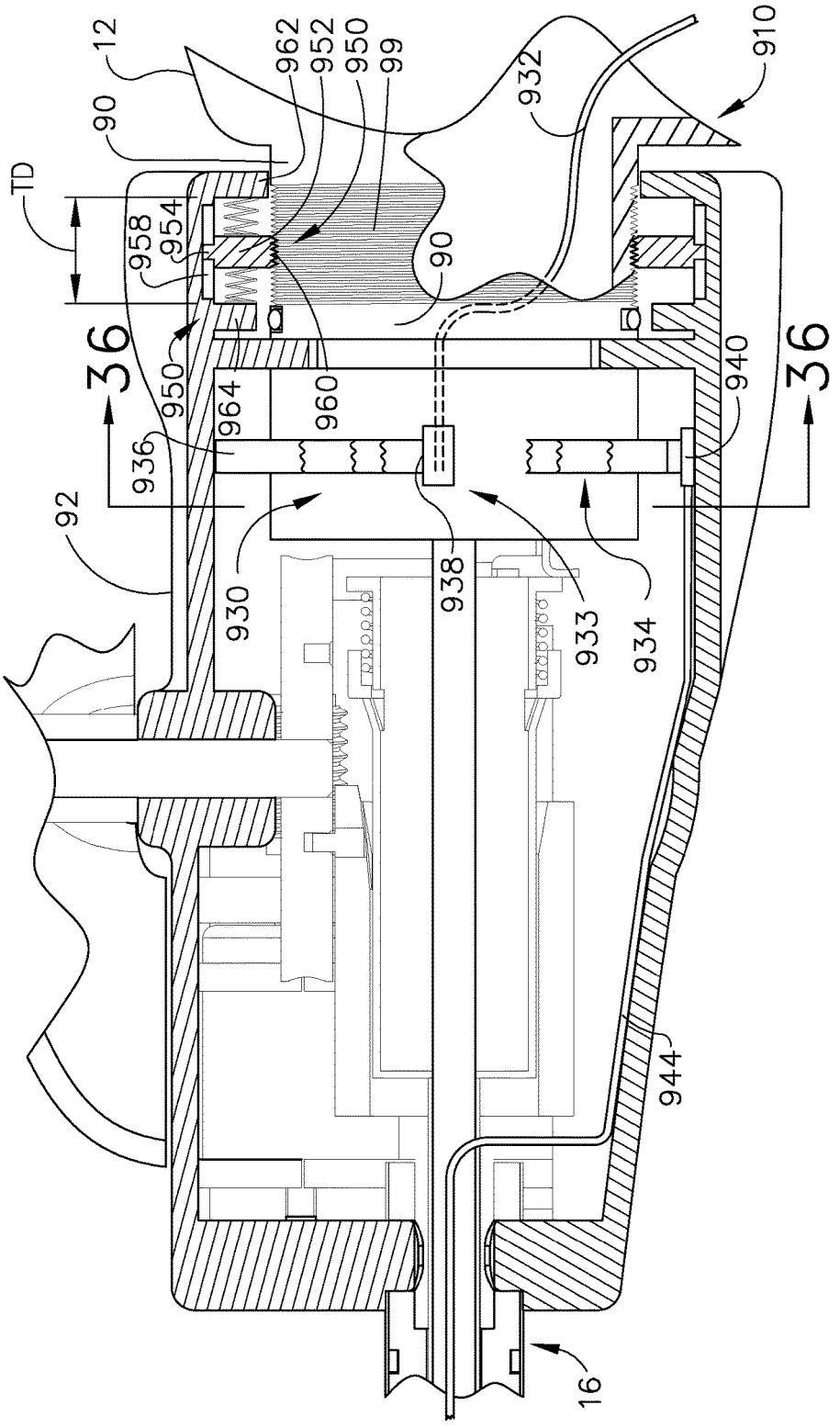
12
962
952
950
99
910
90
932
TD
958
954
90
36
36
950
964
960
940
936
92
930
938
933
934
944
16

FIG. 33

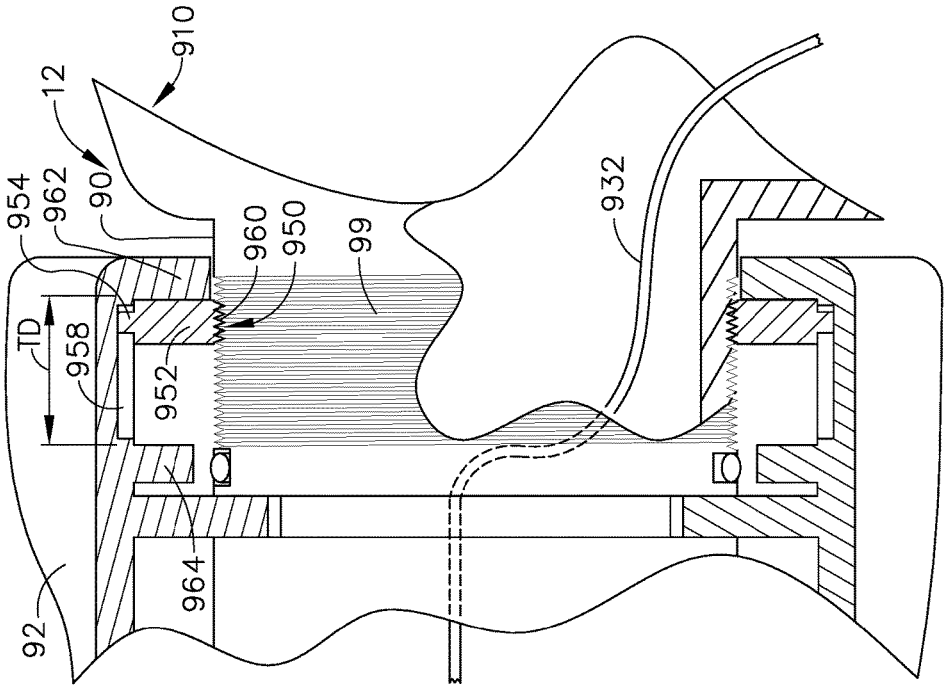
910
12
954
962
90
960
950
99
932
TD
958
952
964
92

FIG. 35

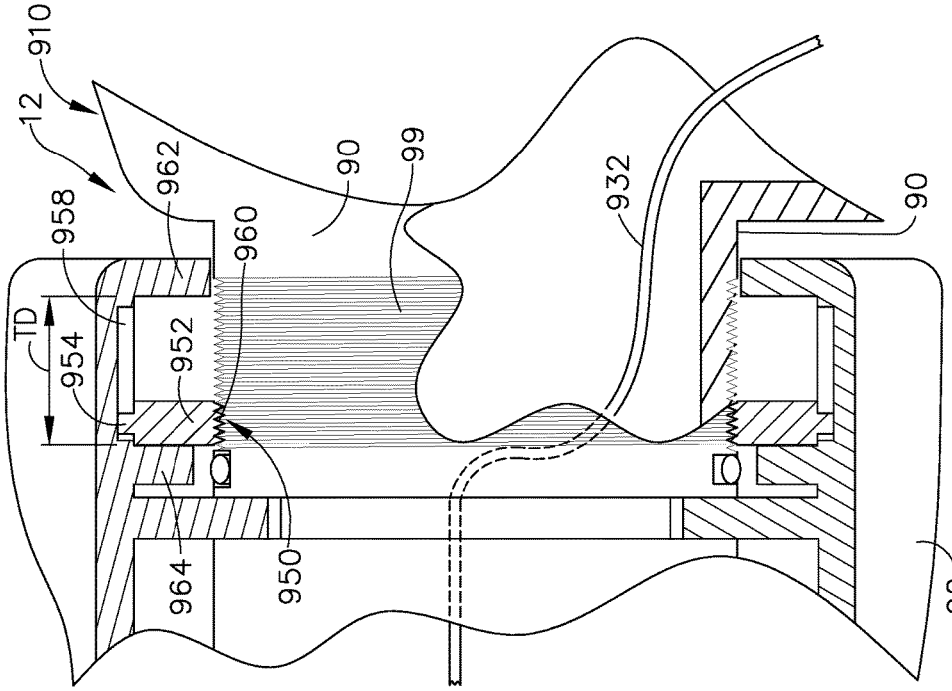
910
12
962
90
99
932
90
958
960
TD
954
952
964
950
92

FIG. 34

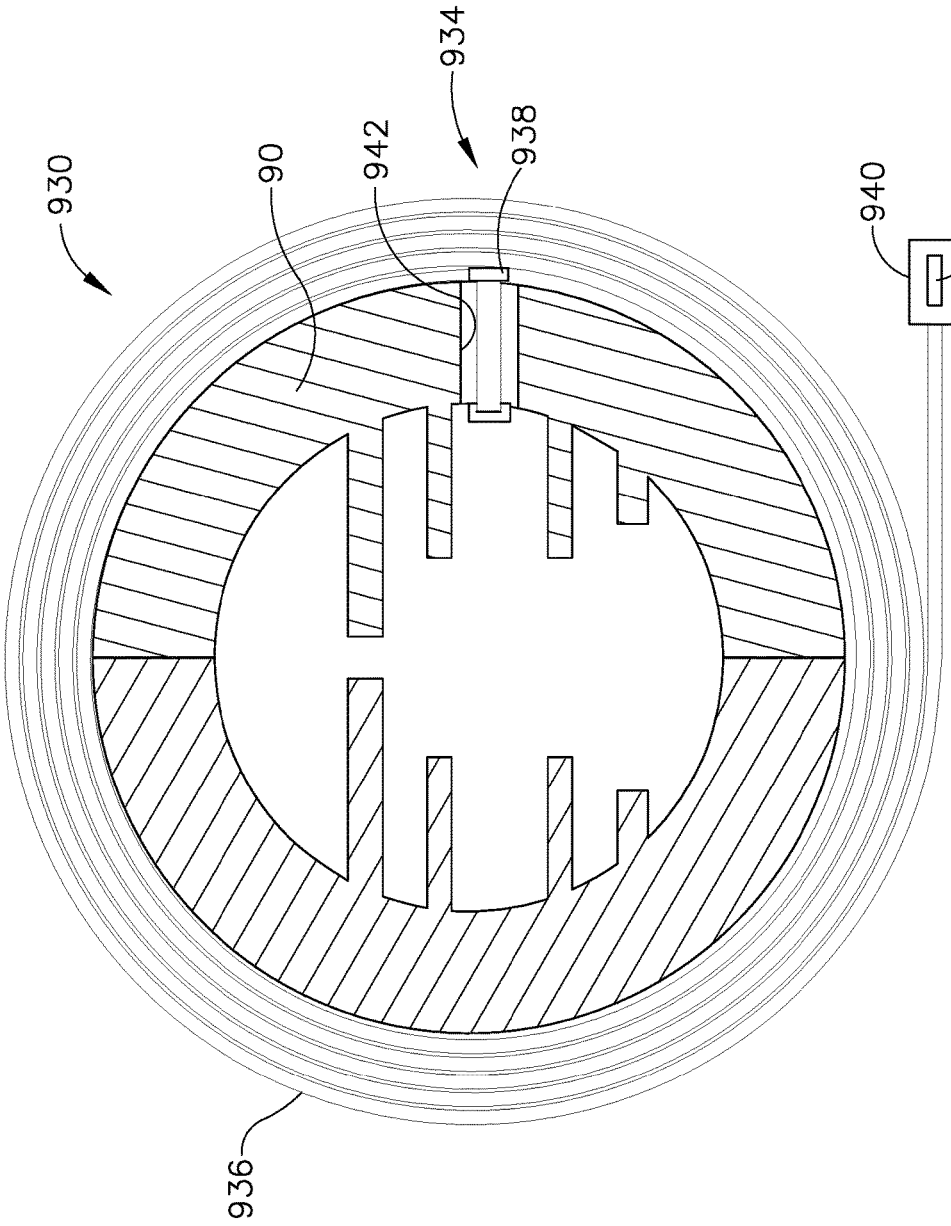

FIG. 36

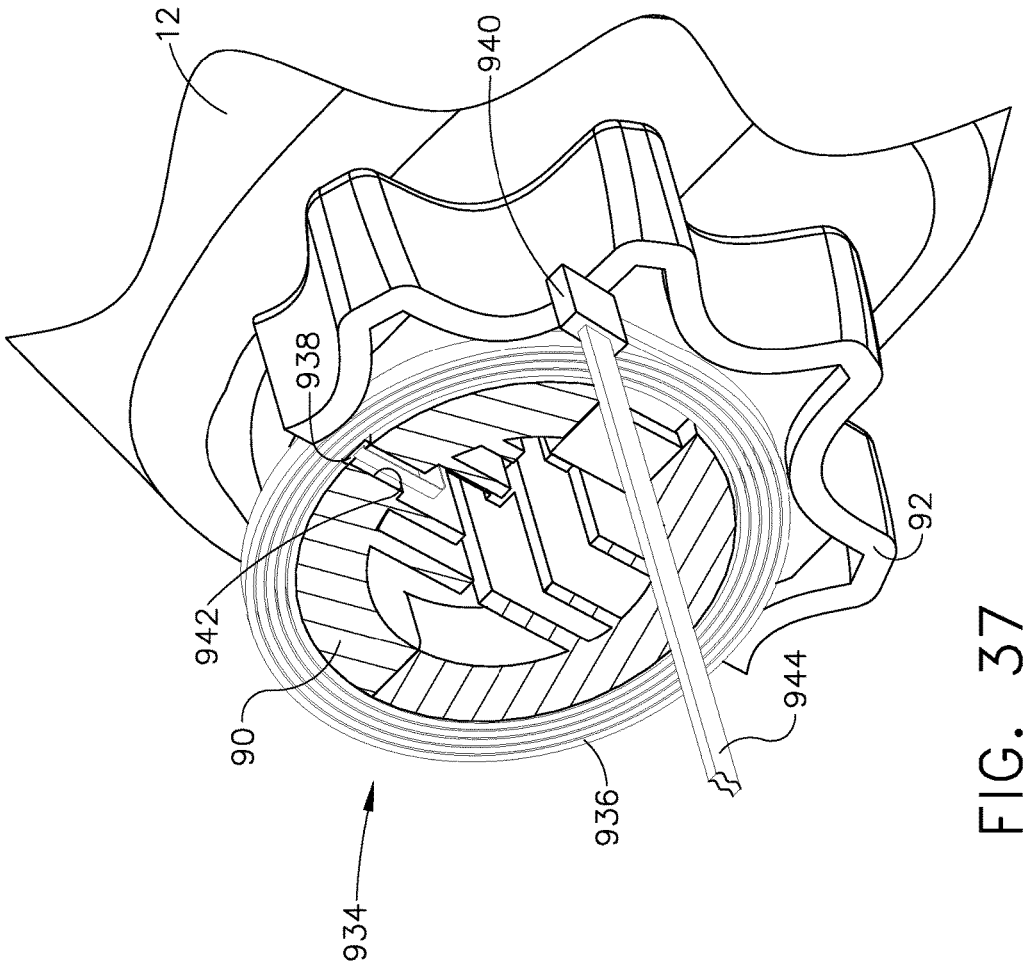

FIG. 37

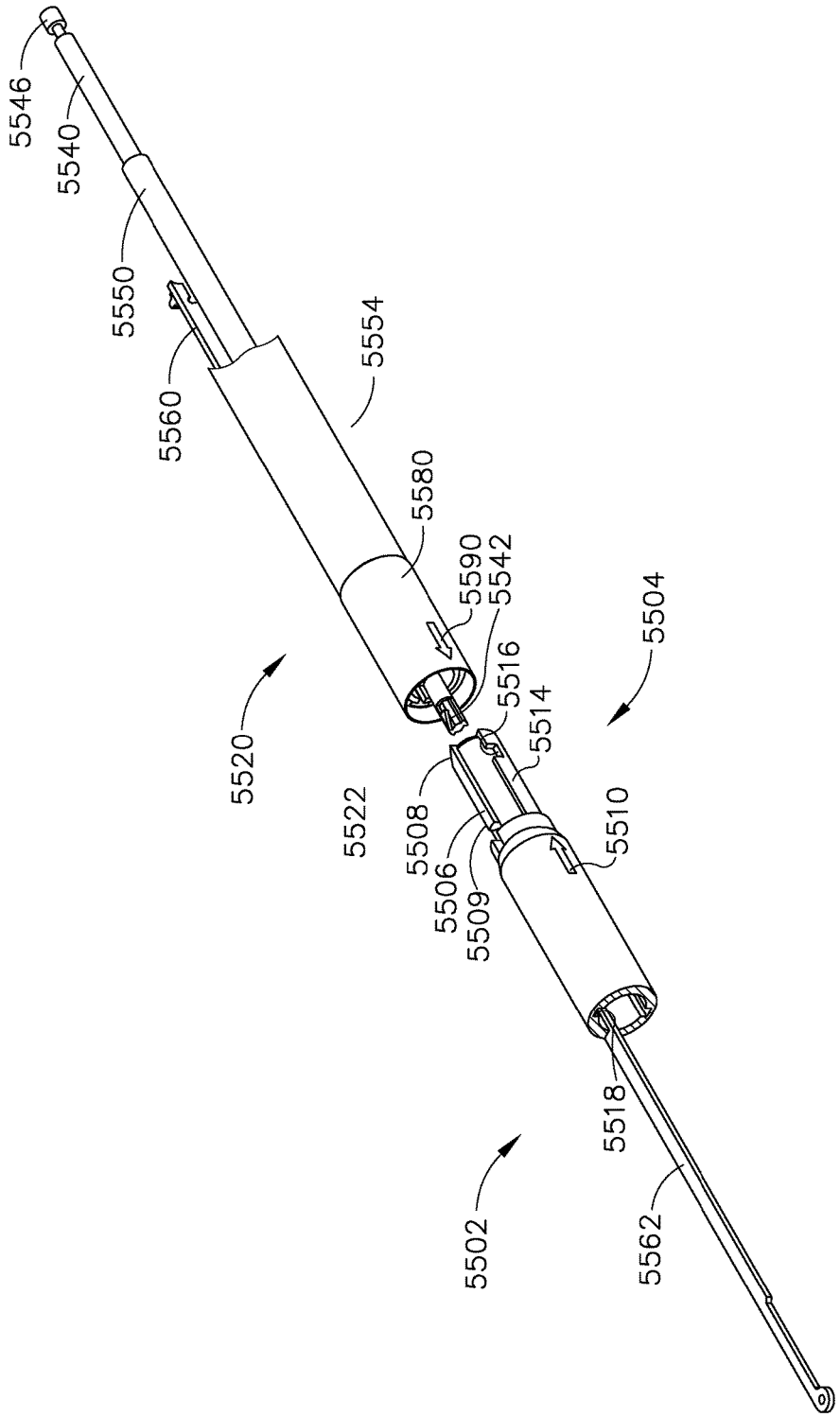
5546
5540
5550
5560
5554
5580
5590
5542
5516
5514
5504
5520
5522
5508
5506
5509
5510
5518
5502
5562

FIG. 38

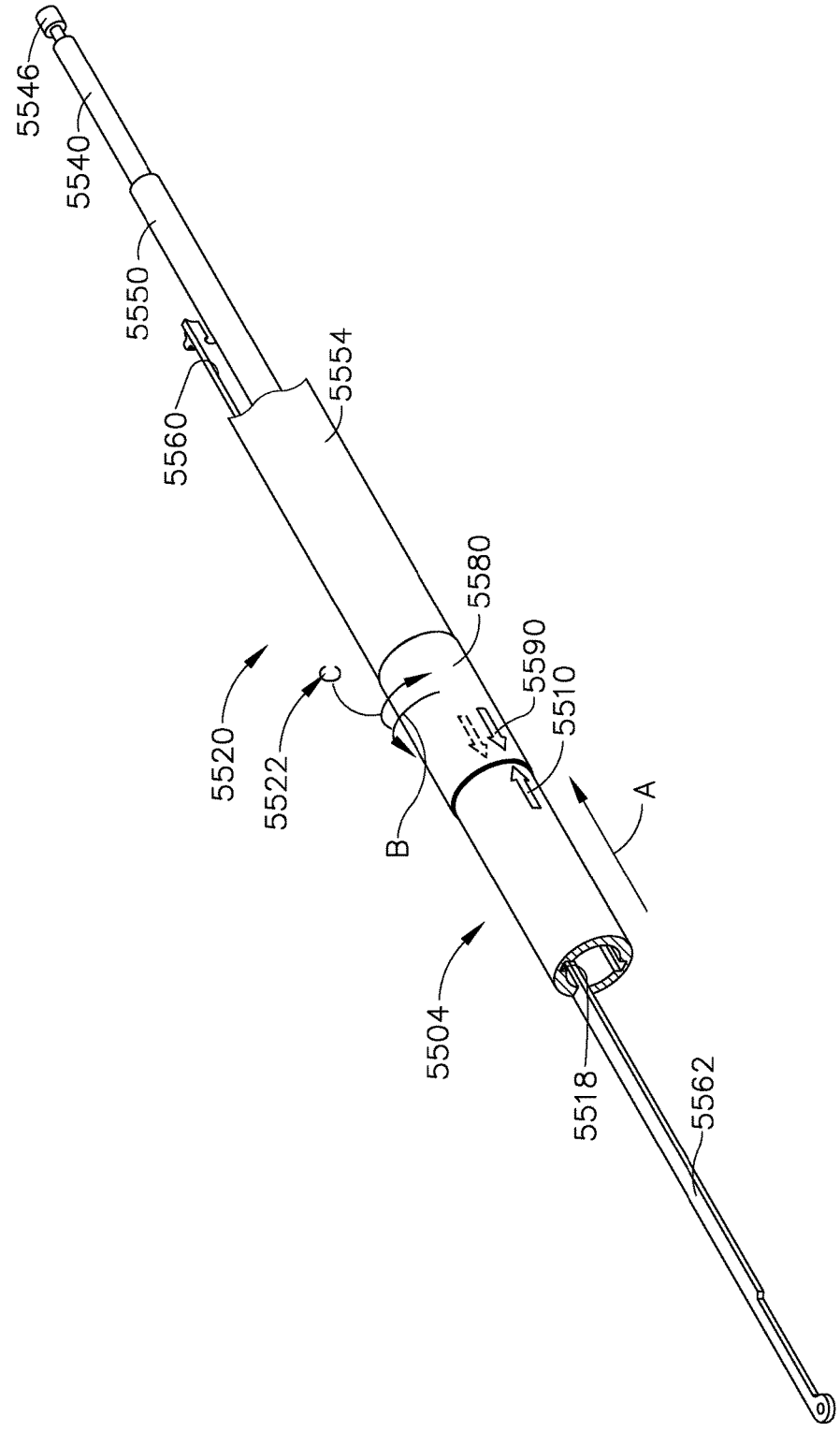
5546
5540
5550
5560
5554
5580
5590
5510
5520
5522
C
B
A
5504
5518
5562

FIG. 39

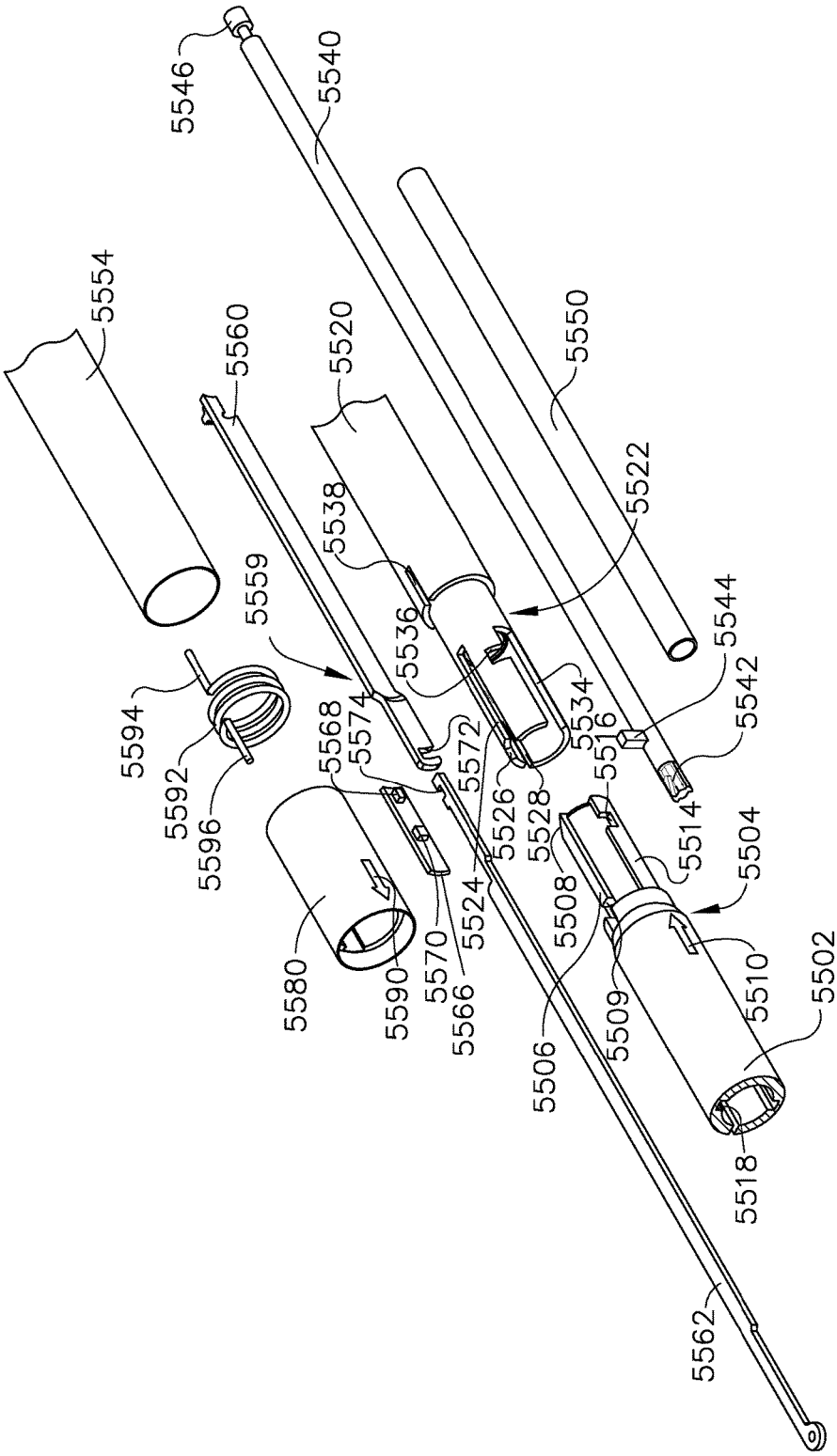
5546
5540
5554
5560
5520
5550
5522
5538
5559
5536
5544
5542
5594
5592
5596
5568
5574
5572
5534
5516
5526
5528
5514
5504
5508
5524
5570
5566
5580
5590
5506
5509
5510
5502
5518
5562

FIG. 40

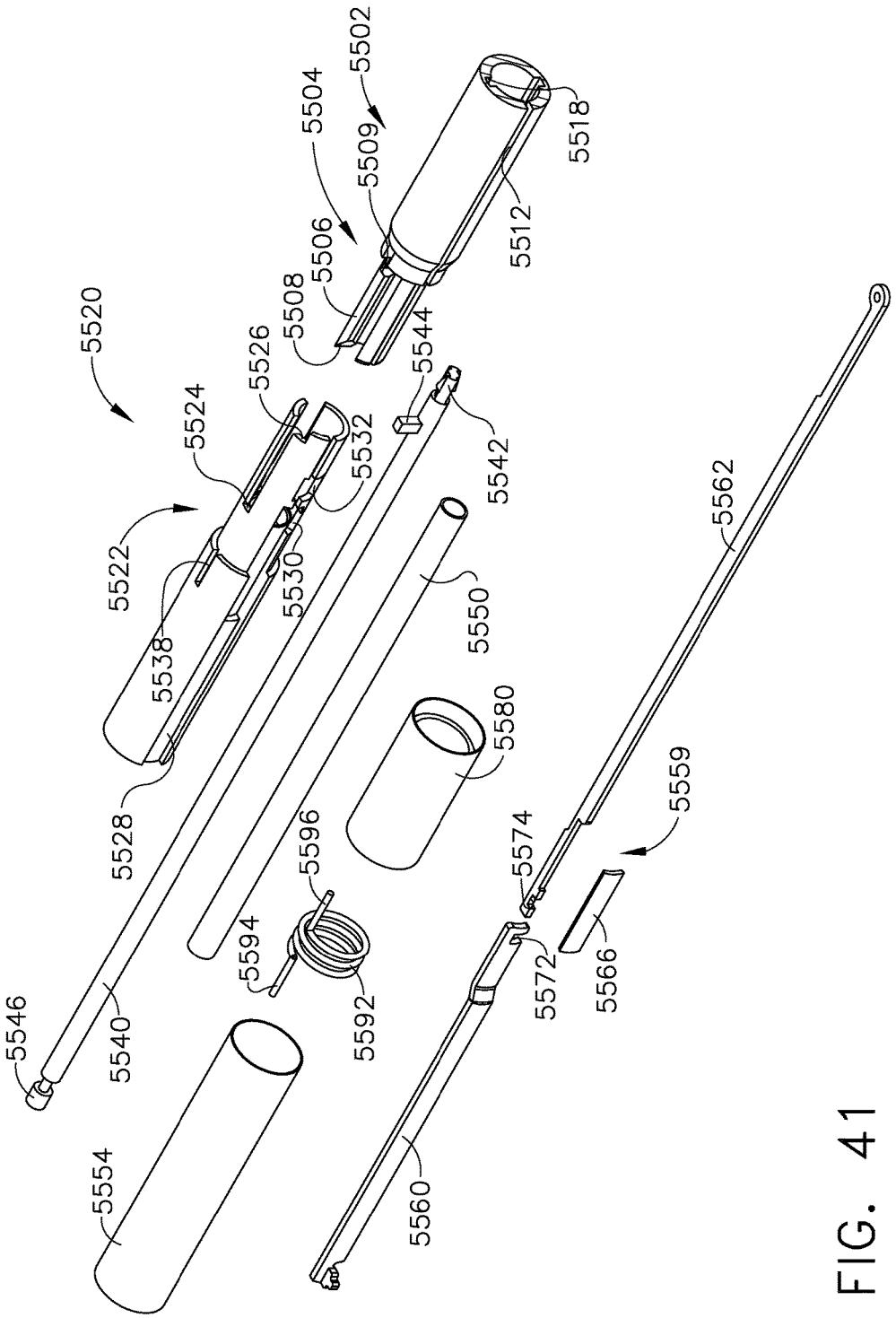
5502
5504
5509
5518
5512
5506
5508
5544
5526
5520
5524
5542
5532
5522
5530
5538
5550
5562
5580
5528
5596
5574
5559
5594
5572
5566
5592
5546
5540
5554
5560

FIG. 41

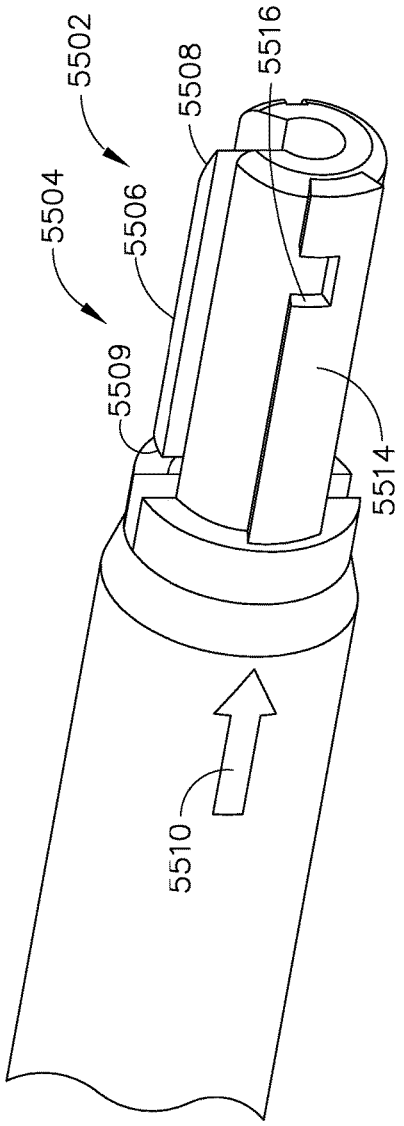
5502
5504
5506
5508
5509
5510
5514
5516

FIG. 42

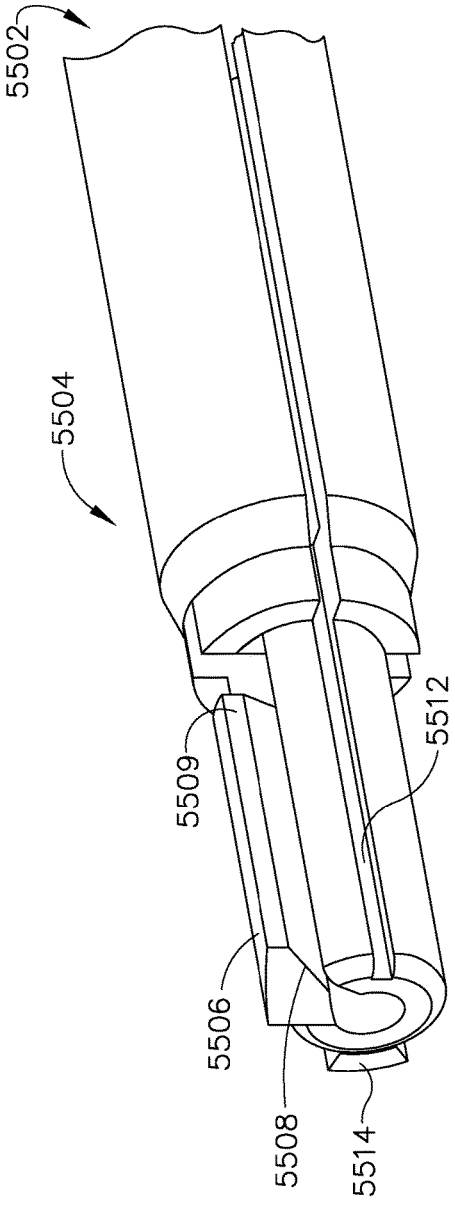
5502
5504
5506
5508
5509
5512
5514

FIG. 43

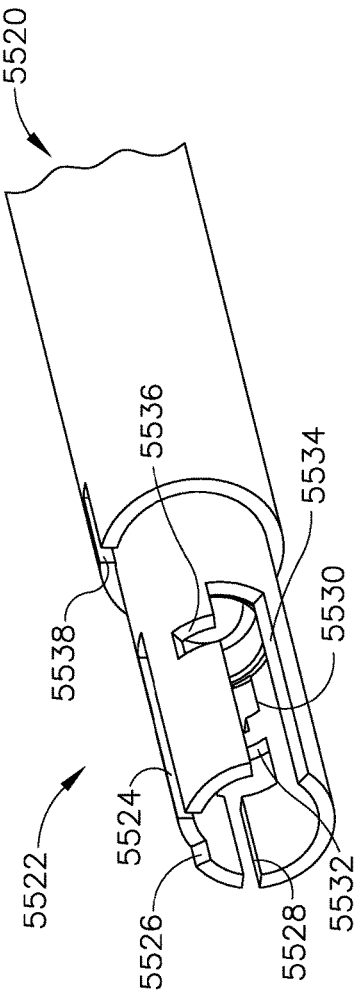
5520
5536
5534
5538
5530
5522
5524
5532
5526
5528

FIG. 44

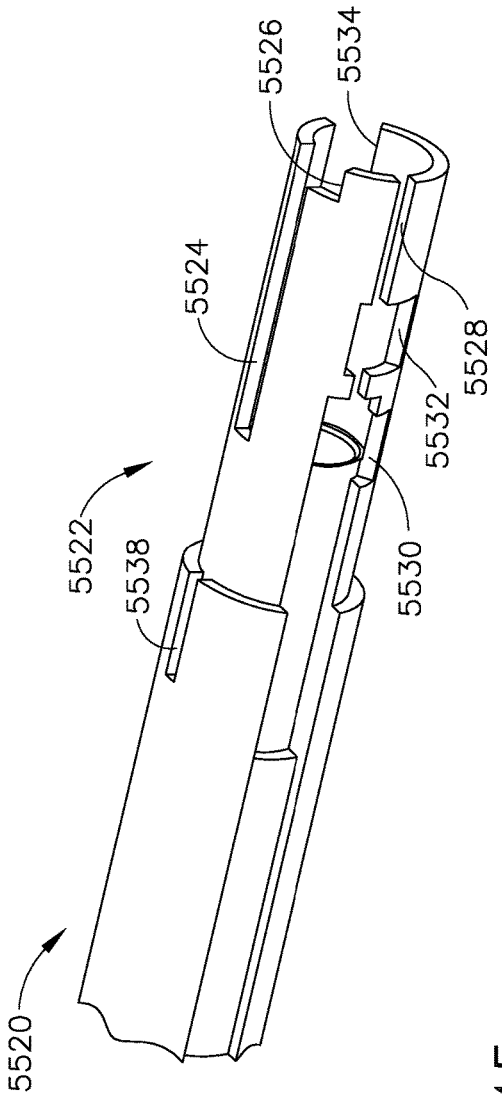
5526
5534
5524
5528
5532
5522
5538
5530
5520

FIG. 45

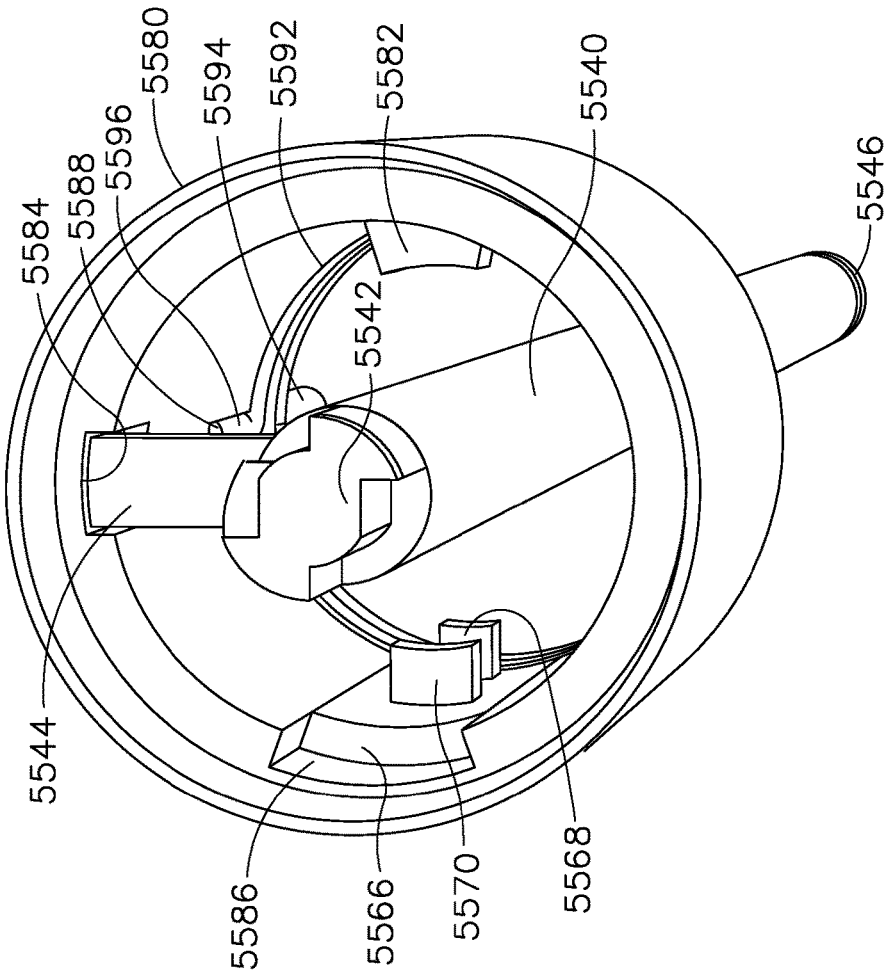
5580
5594
5592
5582
5540
5596
5588
5584
5546
5542
5544
5586
5566
5570
5568

FIG. 46

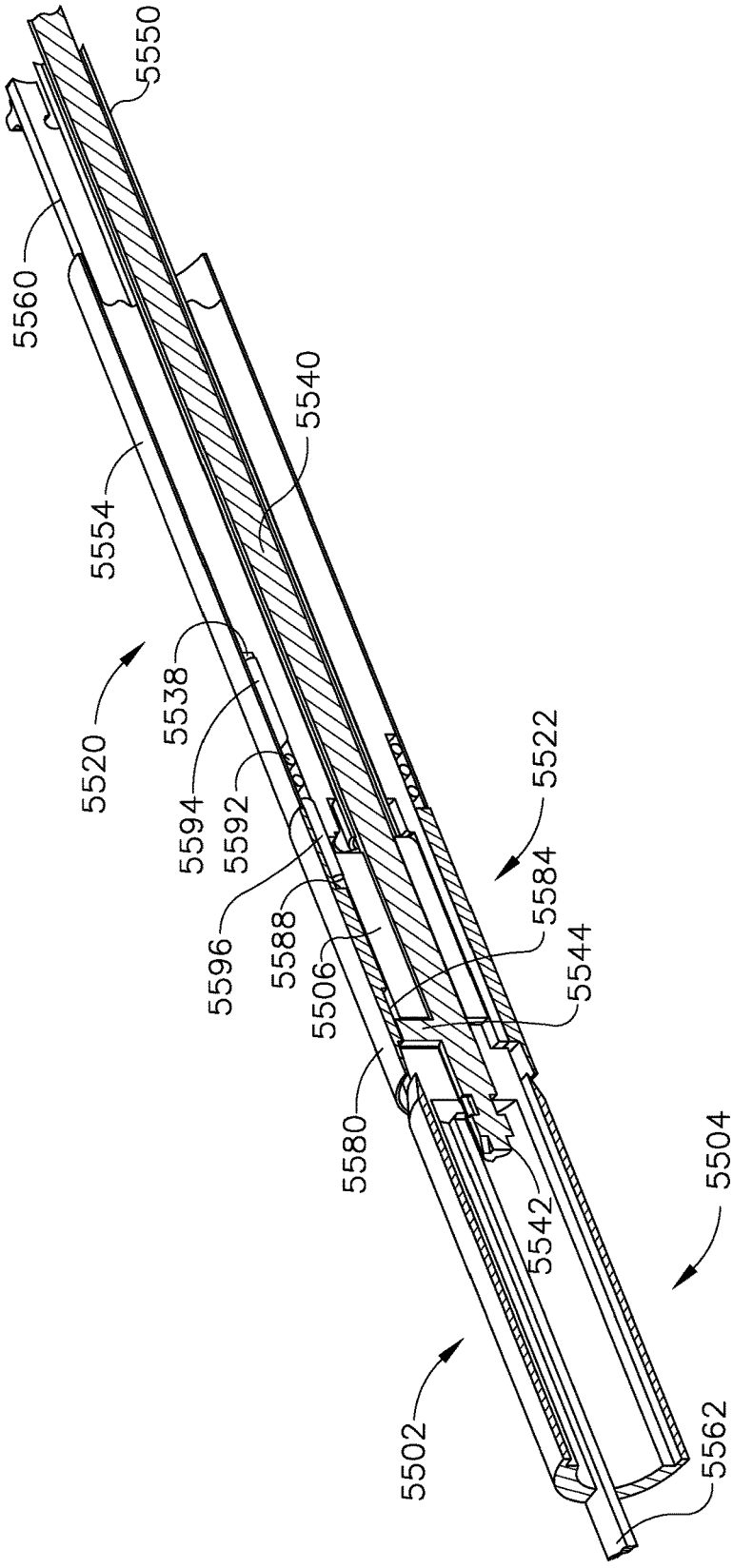
5550
5560
5540
5554
5538
5520
5522
5594
5592
5584
5596
5588
5544
5506
5580
5504
5542
5502
5562

FIG. 47

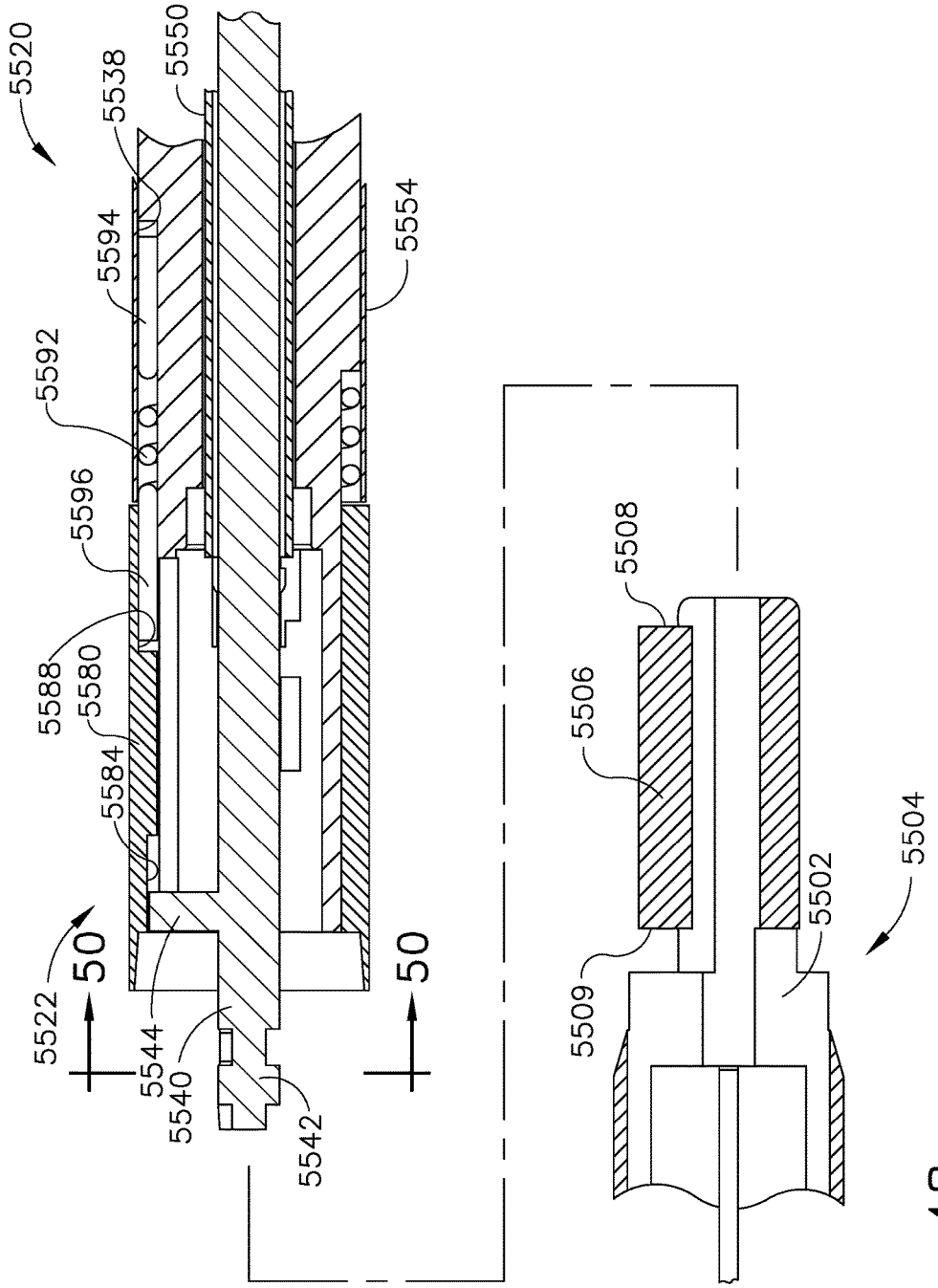
5520
5538
5550
5554
5594
5592
5596
5588
5580
5584
5522
50
5544
5540
5542
50
5508
5506
5509
5502
5504

FIG. 48

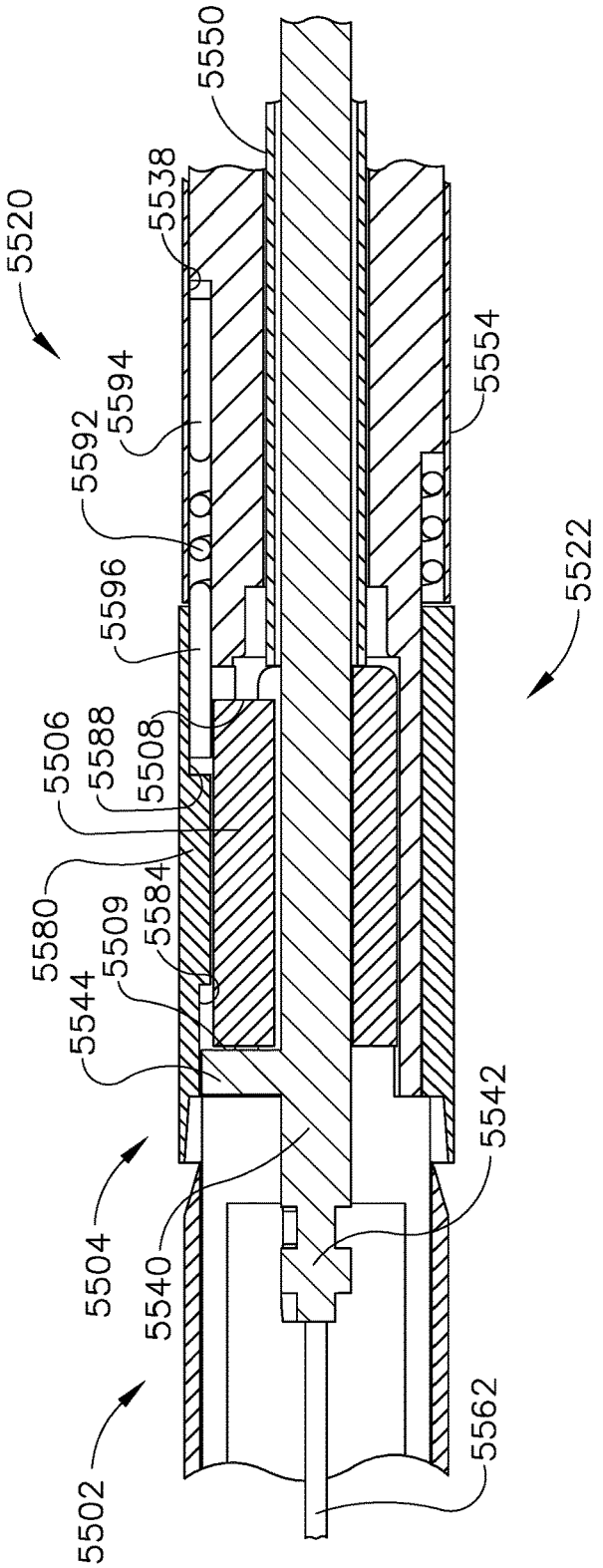
5550
5538
5520
5554
5594
5592
5596
5522
5506
5588
5508
5580
5584
5509
5544
5542
5504
5540
5562
5502

FIG. 49

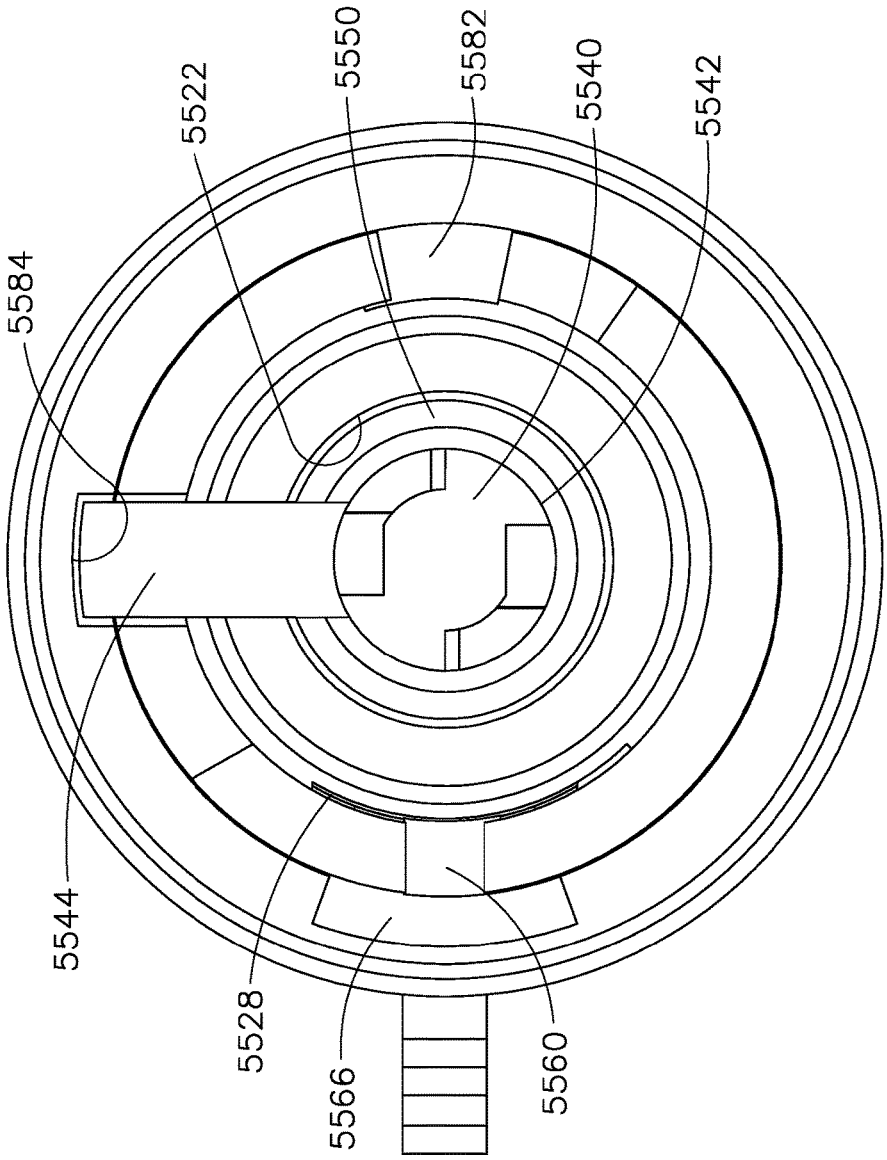

FIG. 50

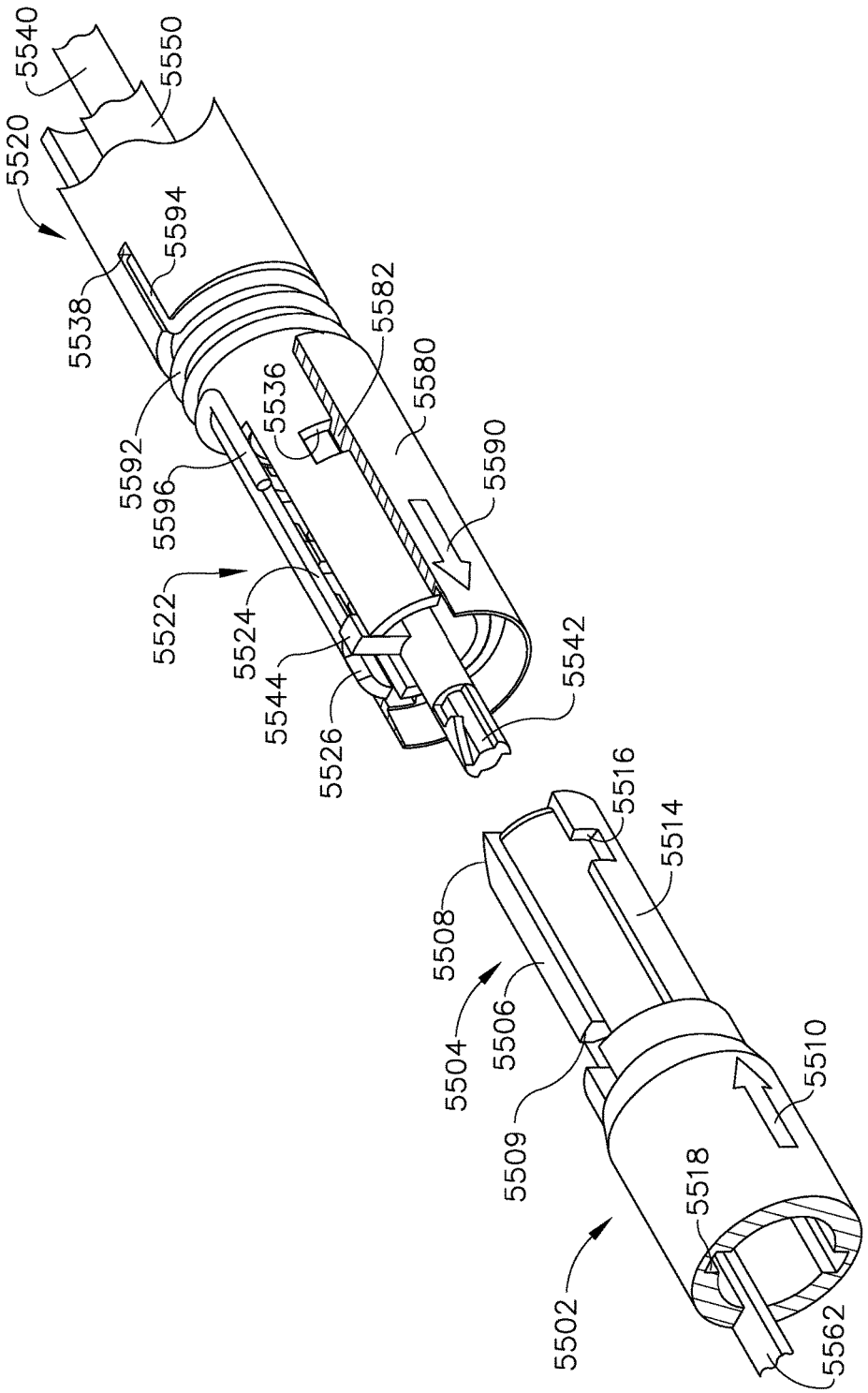
5540
5550
5520
5594
5538
5582
5580
5536
5592
5596
5590
5522
5524
5544
5542
5526
5516
5514
5508
5504
5506
5510
5509
5518
5502
5562

FIG. 51

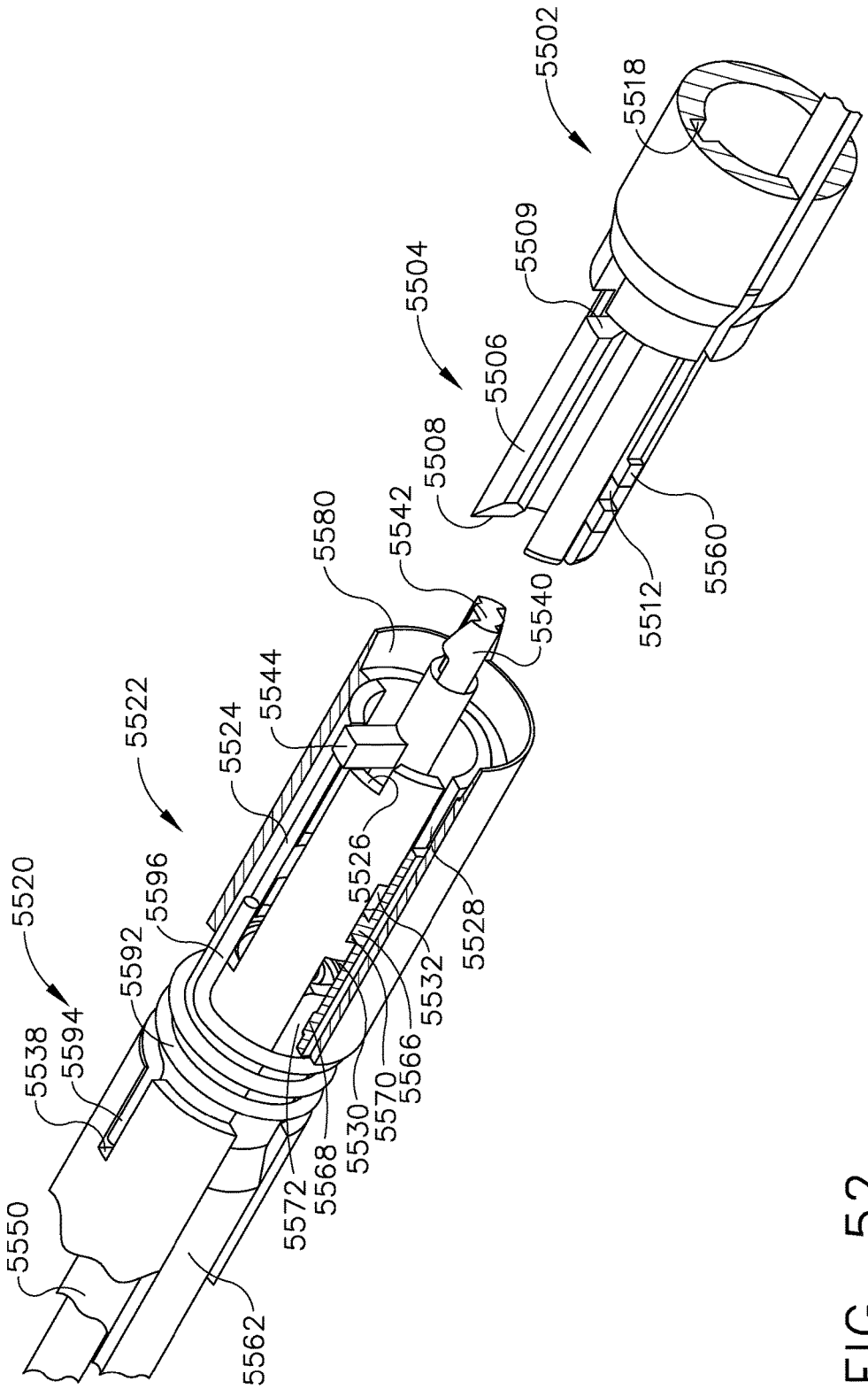
5502
5518
5509
5504
5506
5508
5542
5580
5540
5512
5560
5544
5524
5522
5526
5528
5532
5566
5570
5530
5568
5572
5562
5550
5538
5594
5592
5596
5520

FIG. 52

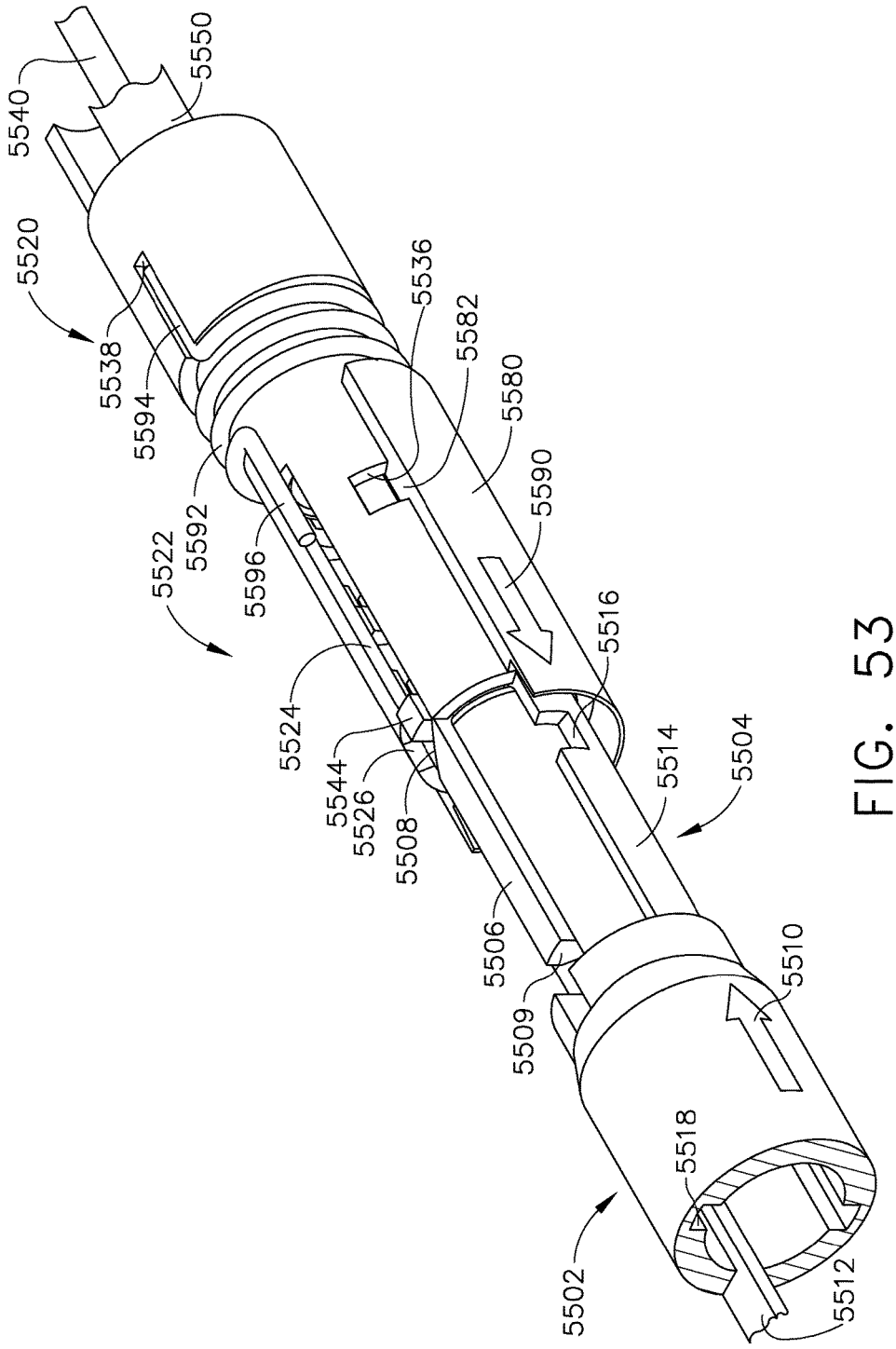
5540
5550
5520
5538
5594
5536
5582
5580
5590
5592
5596
5522
5516
5524
5544
5526
5508
5514
5504
5506
5509
5510
5518
5502
5512

FIG. 53

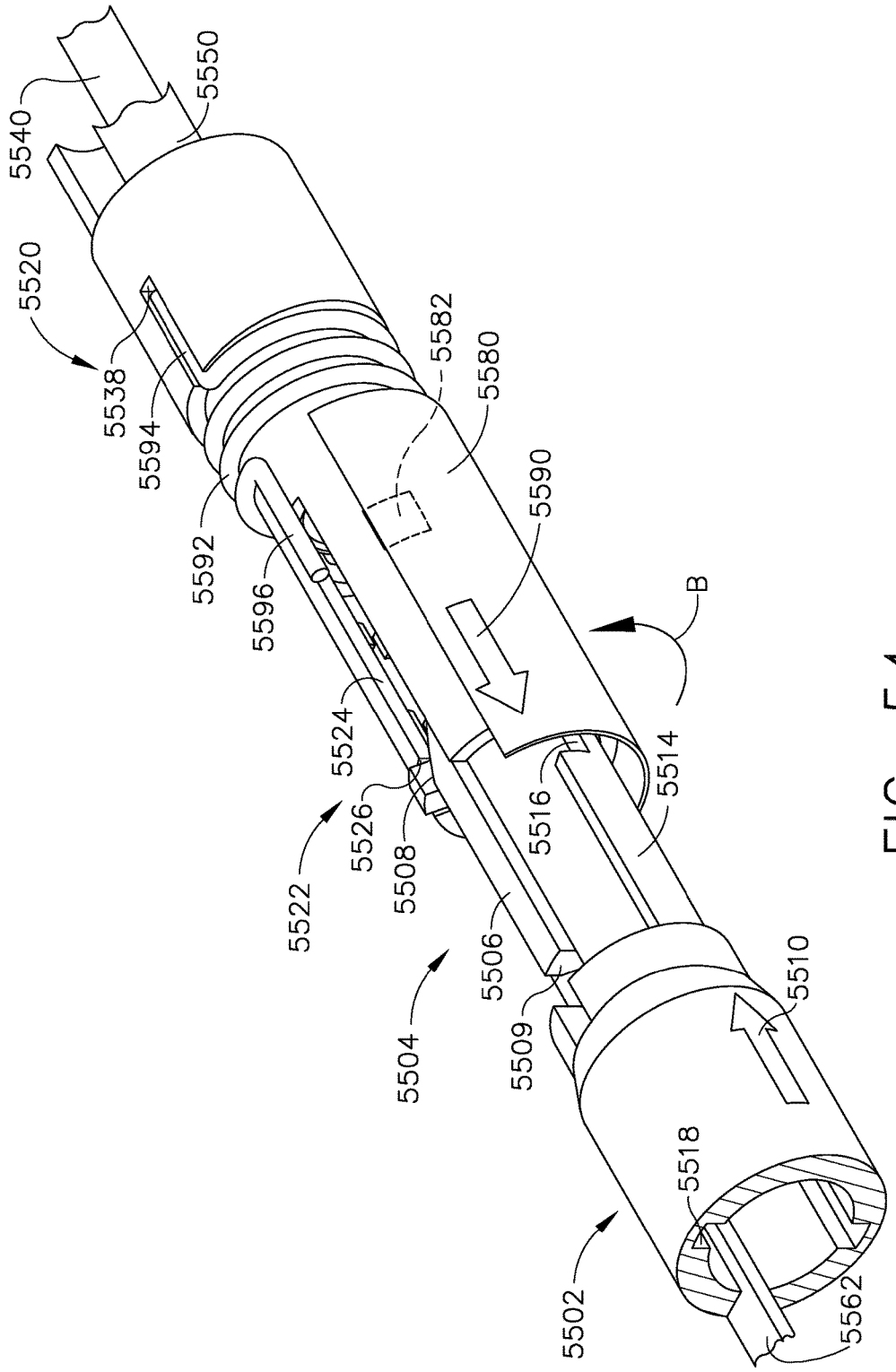
5540
5550
5520
5538
5594
5582
5580
5590
5592
5596
B
5524
5514
5526
5516
5522
5508
5506
5504
5509
5510
5518
5502
5562

FIG. 54

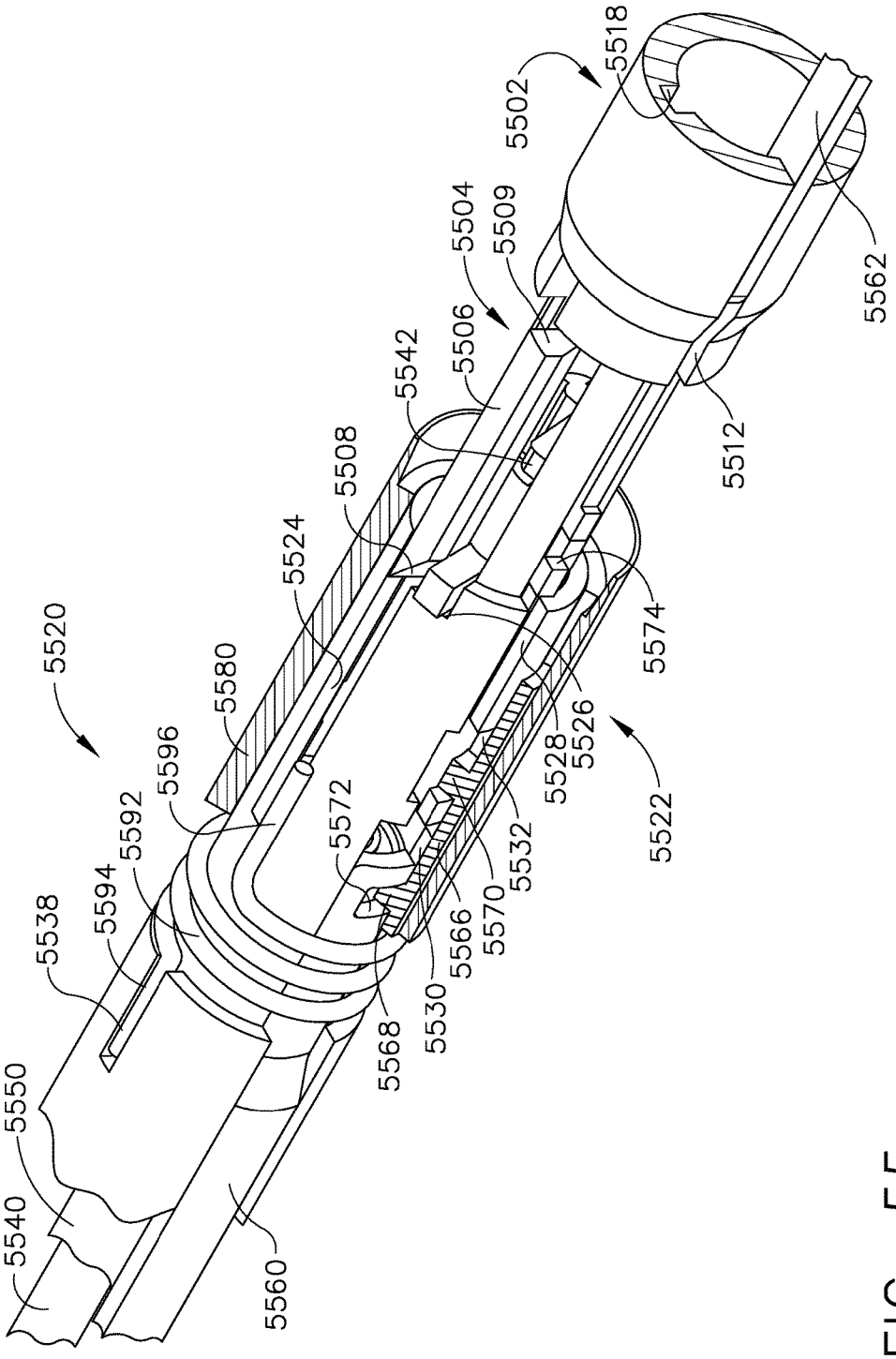
5518
5502
5504
5509
5562
5506
5542
5512
5508
5524
5574
5520
5580
5526
5528
5596
5572
5522
5592
5532
5594
5570
5538
5566
5530
5568
5550
5540
5560

FIG. 55

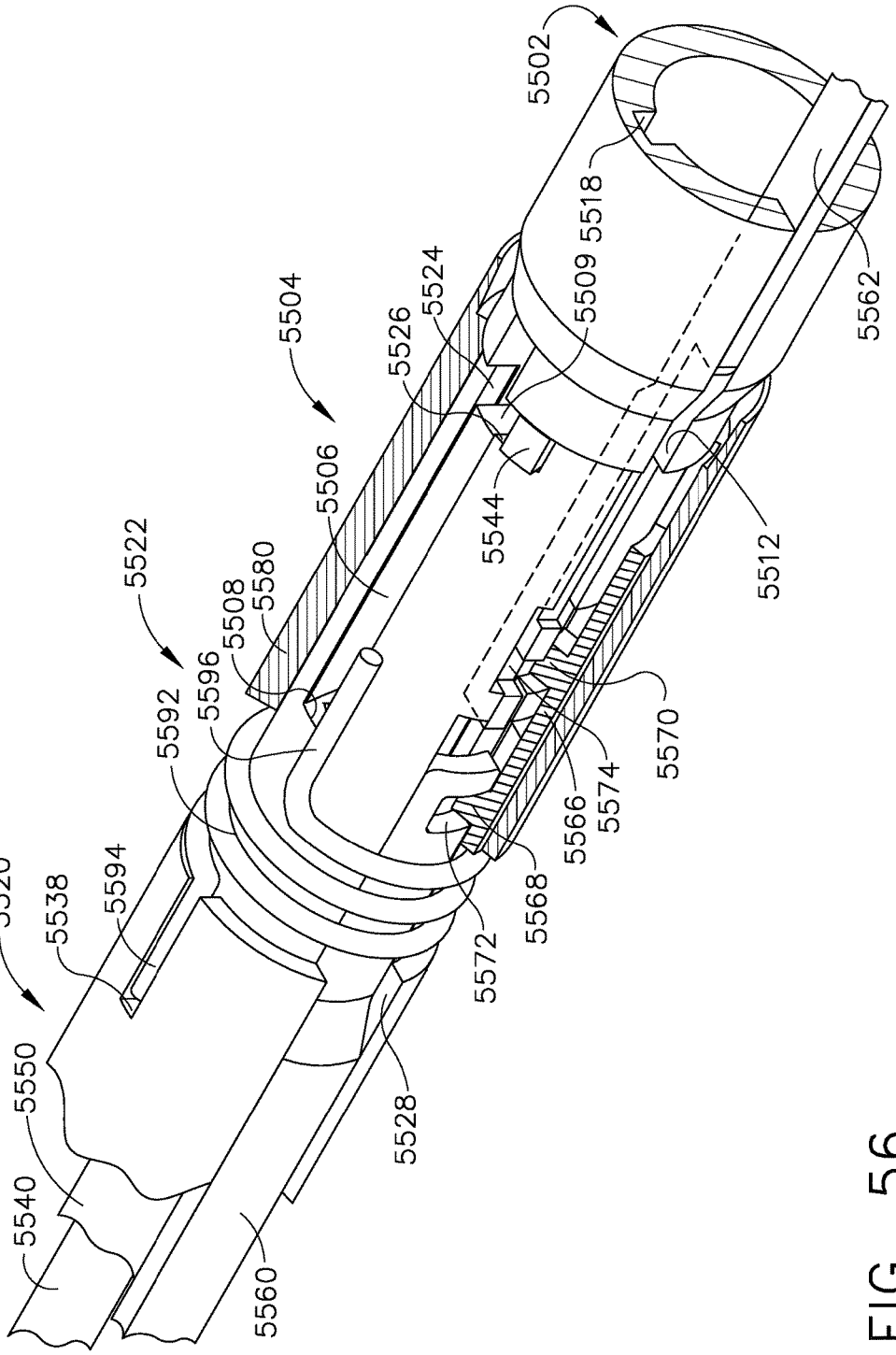
5502
5518
5509
5562
5504
5526
5524
5506
5544
5512
5522
5508
5580
5596
5592
5570
5574
5566
5568
5572
5520
5538
5594
5550
5540
5528
5560

FIG. 56

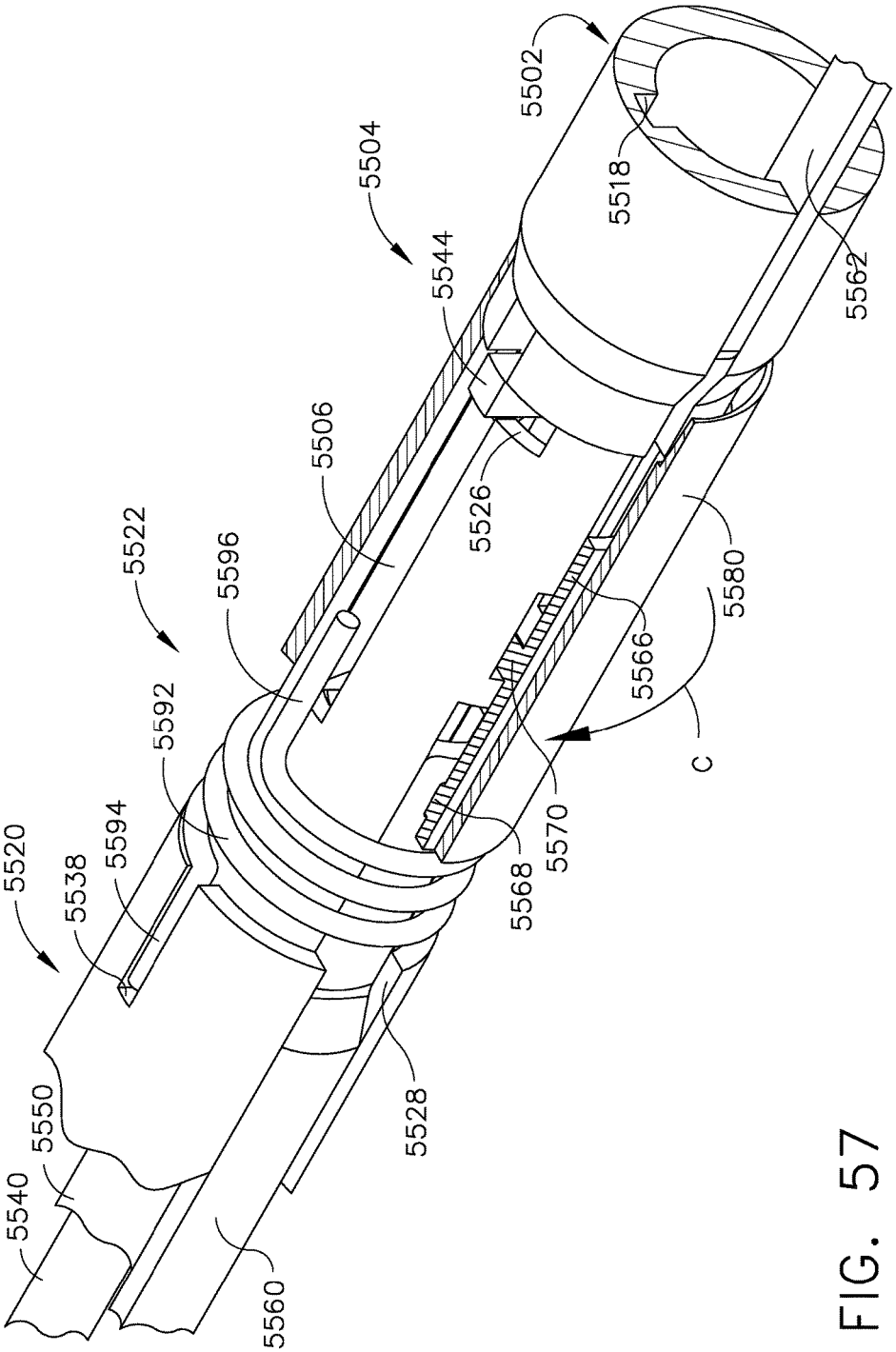
5502
5504
5518
5544
5562
5506
5526
5522
5596
5580
5566
5592
C
5520
5538
5594
5570
5568
5528
5550
5540
5560

FIG. 57

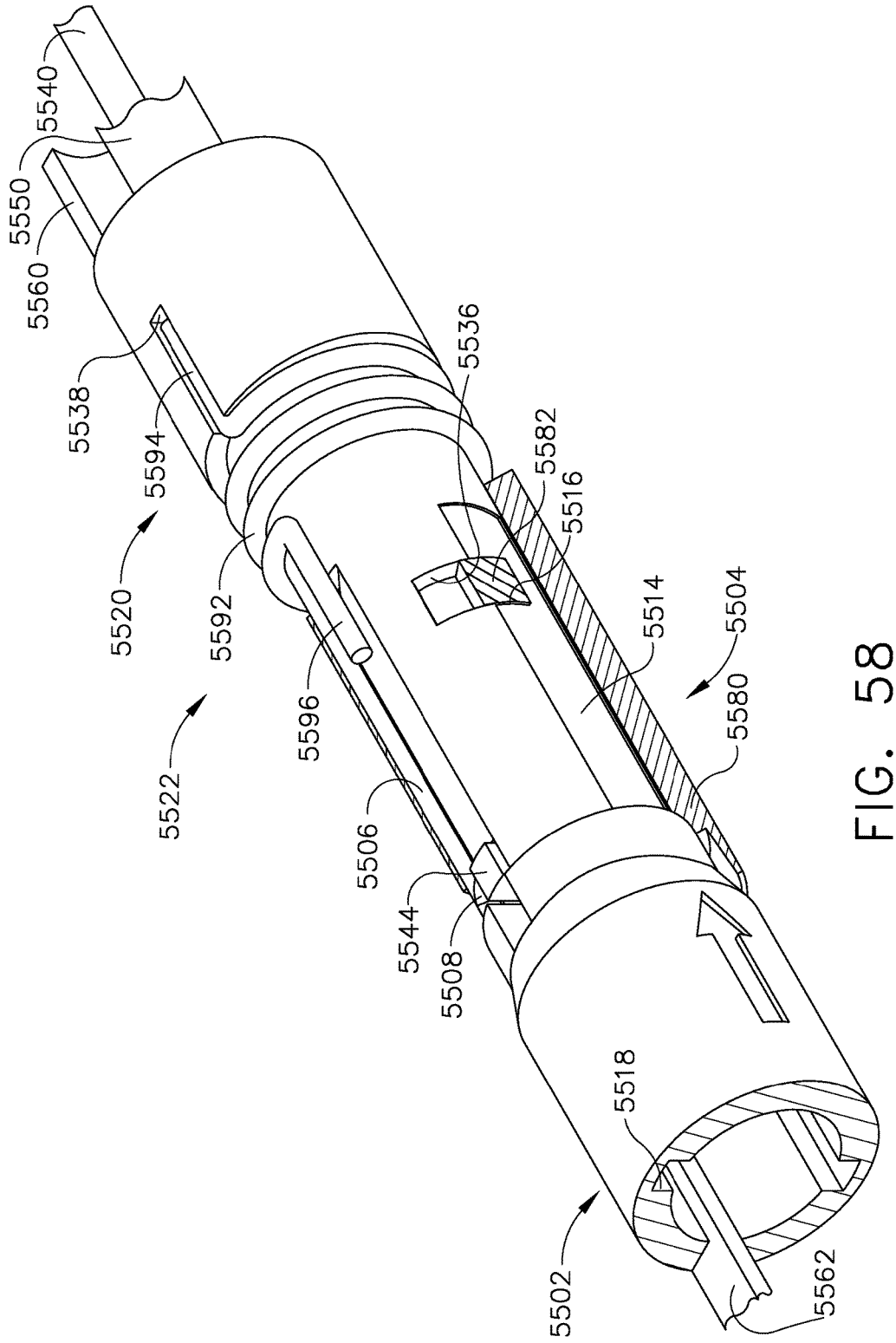
5540
5550
5560
5538
5594
5520
5592
5522
5596
5506
5544
5508
5536
5582
5516
5514
5504
5580
5518
5502
5562

FIG. 58

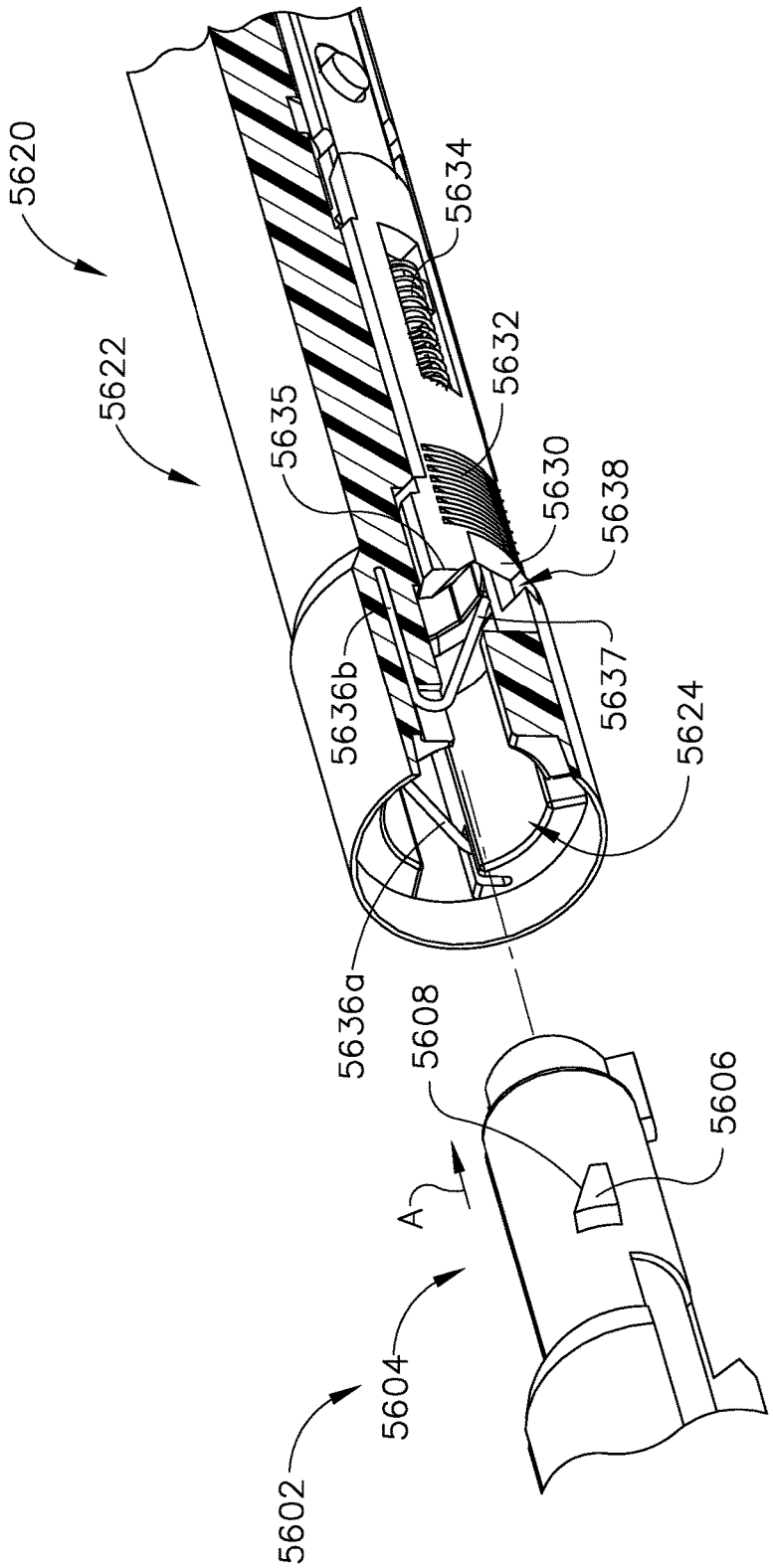
5620
5622
5634
5632
5635
5630
5638
5637
5636b
5624
5636a
5608
5606
A
5604
5602

FIG. 59

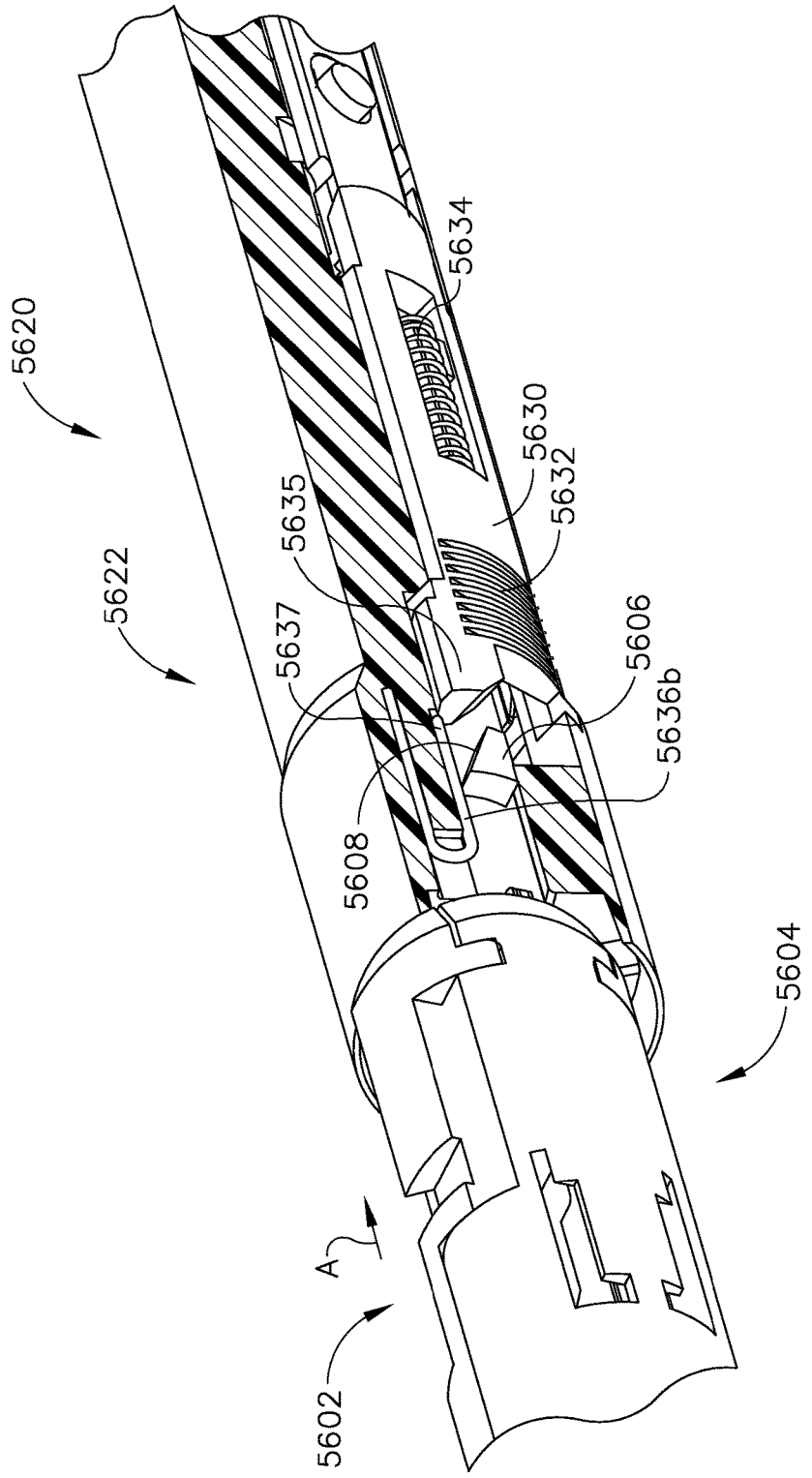
5620
5622
5634
5630
5632
5635
5637
5606
5636b
5608
5604
A
5602

FIG. 60

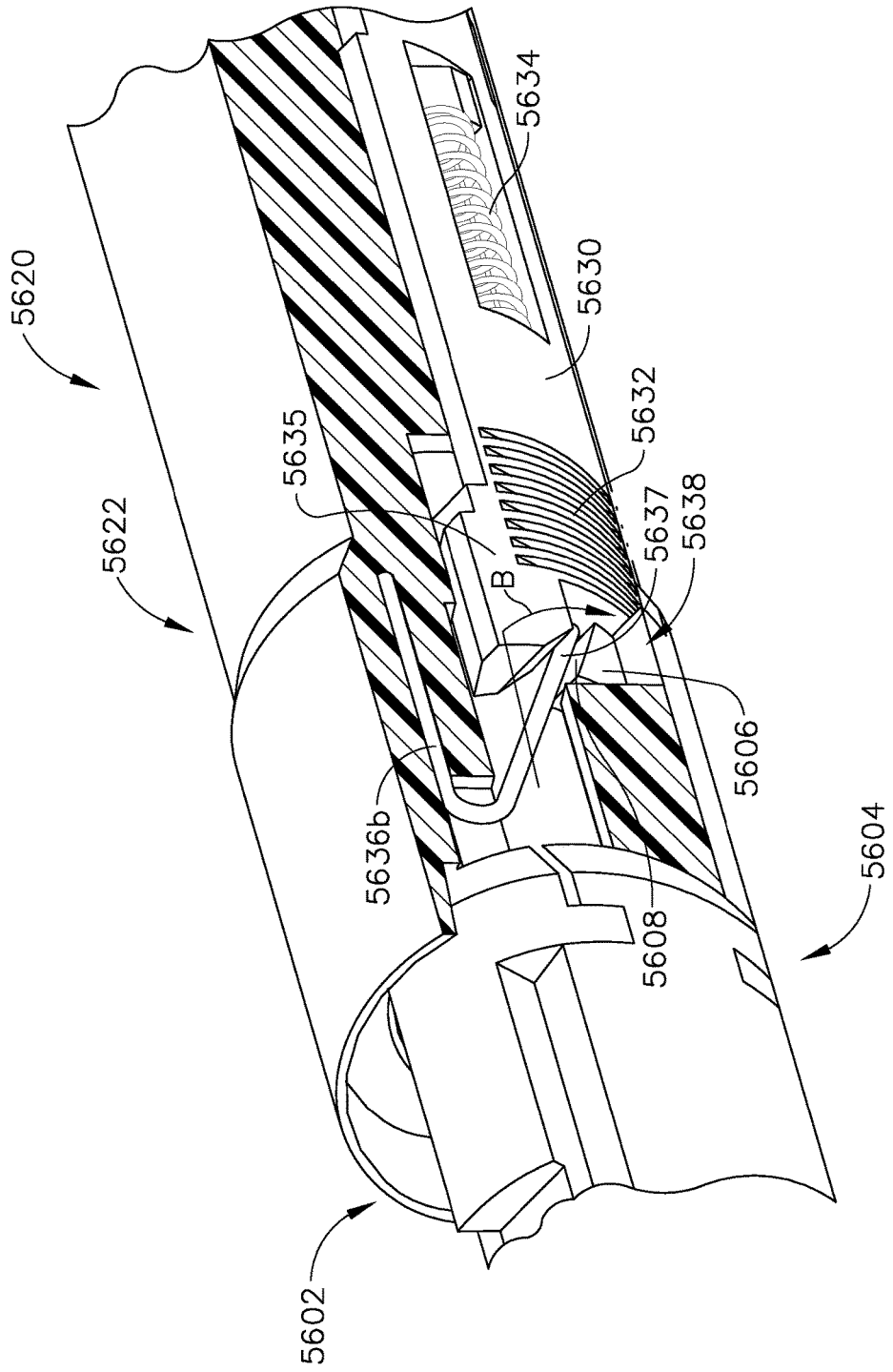
5620
5622
5634
5630
5632
5635
5637
5638
B
5606
5636b
5604
5608
5602

FIG. 61

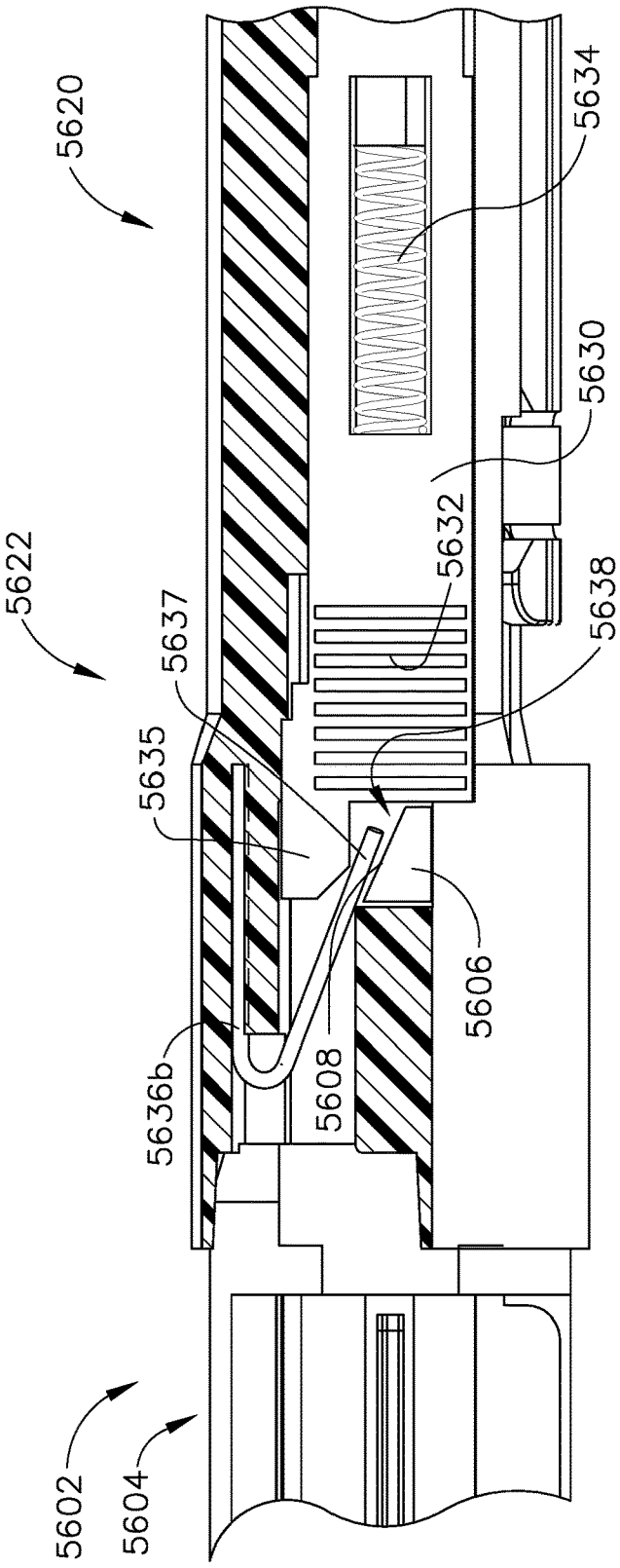
5620
5634
5630
5632
5622
5638
5637
5635
5606
5636b
5608
5602
5604

FIG. 62

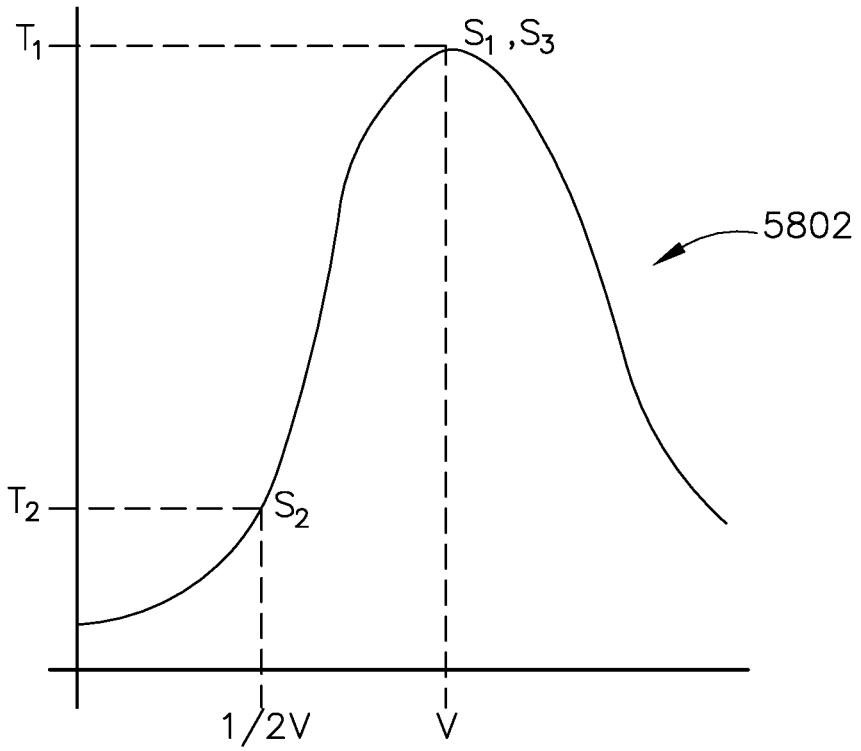

FIG. 63

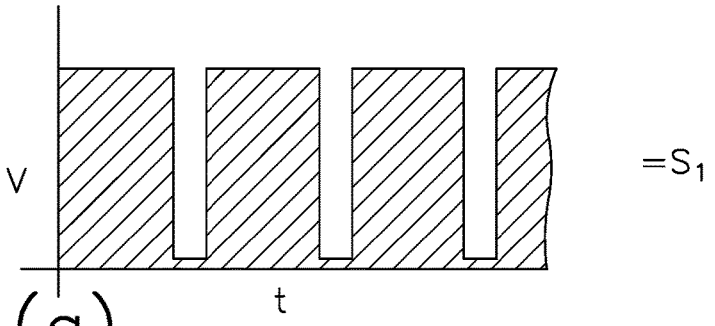

FIG. 64(a)

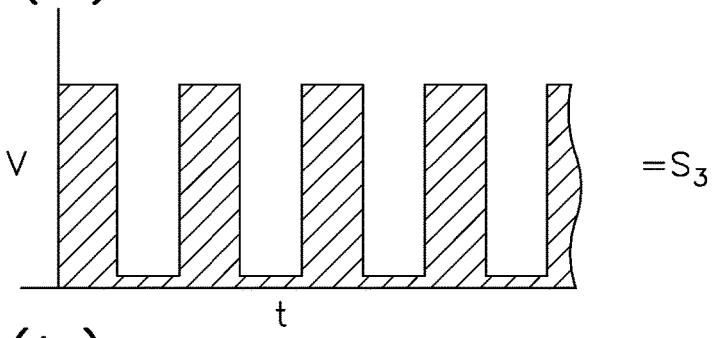

FIG. 64(b)

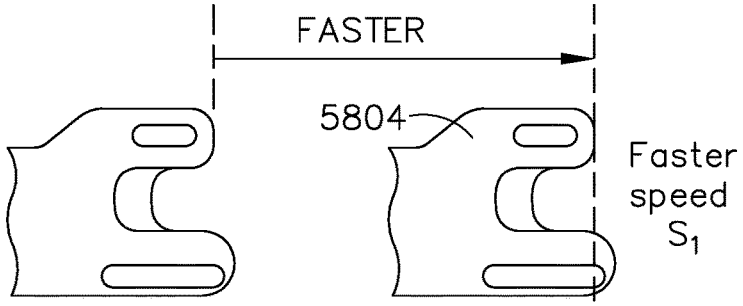

FIG. 65(a)

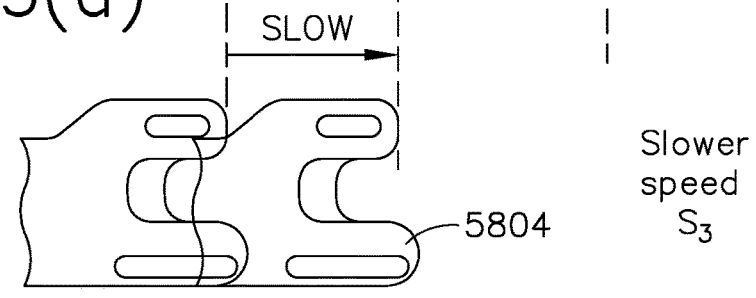

FIG. 65(b)

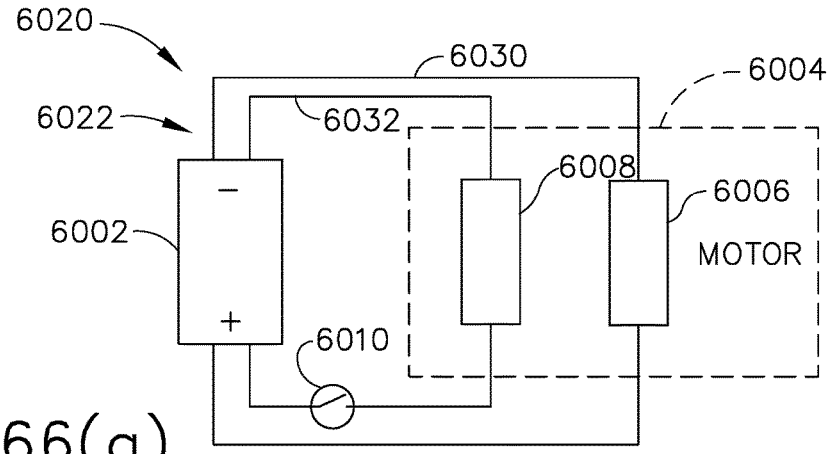

FIG. 66(a)

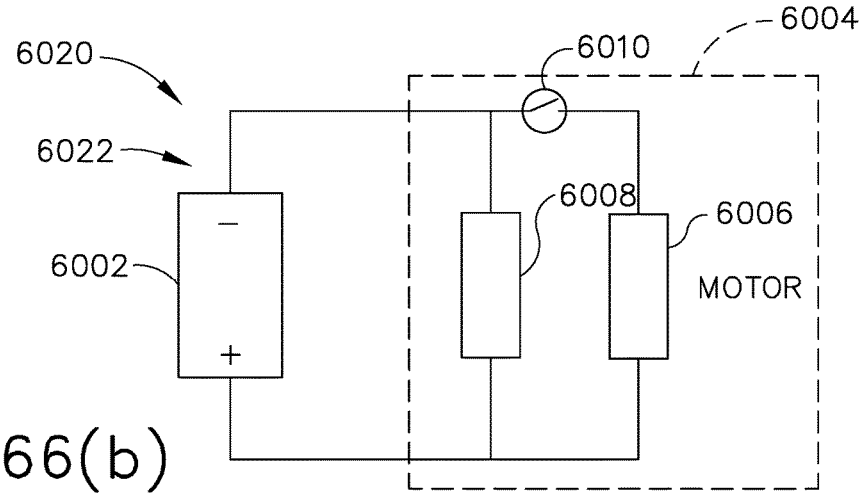

FIG. 66(b)

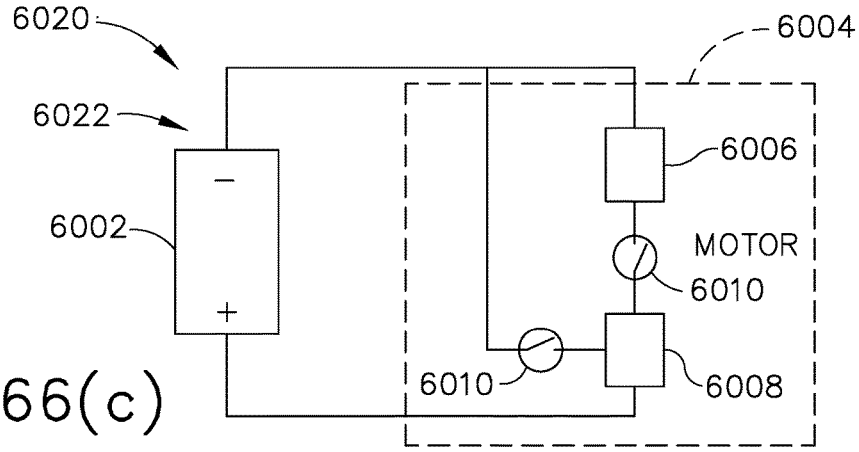

FIG. 66(c)

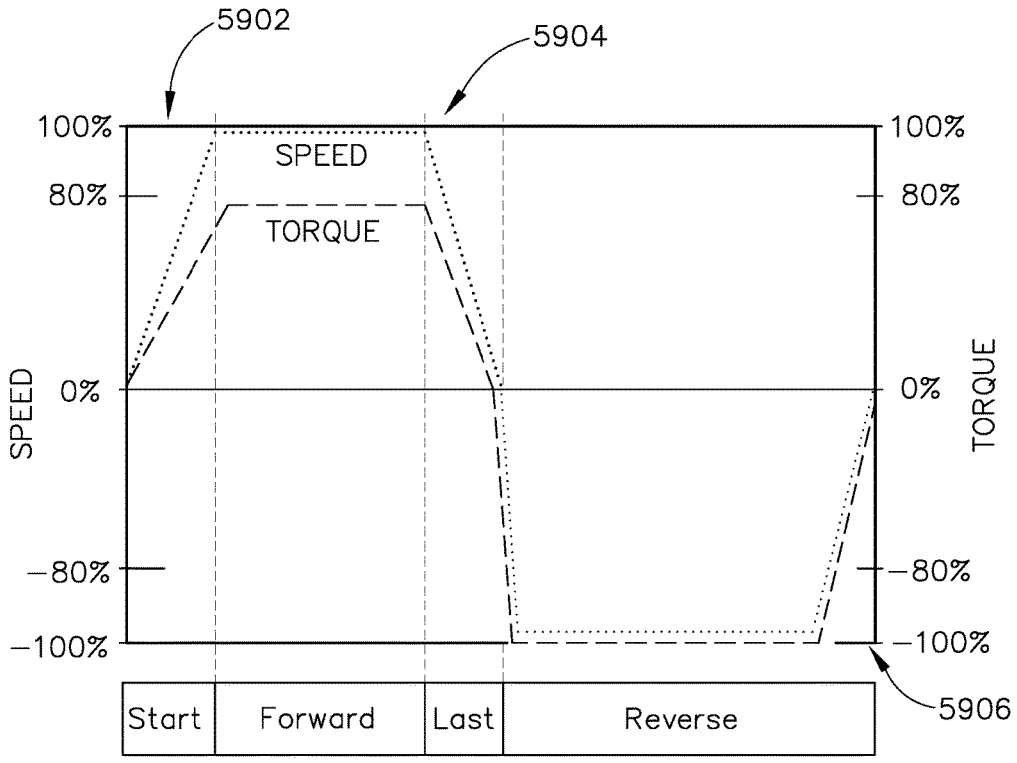
5902
5904
100%
80%
0%
−80%
−100%
SPEED
TORQUE
100%
80%
0%
−80%
−100%
SPEED
TORQUE
Start
Forward
Last
Reverse
5906

FIG. 67

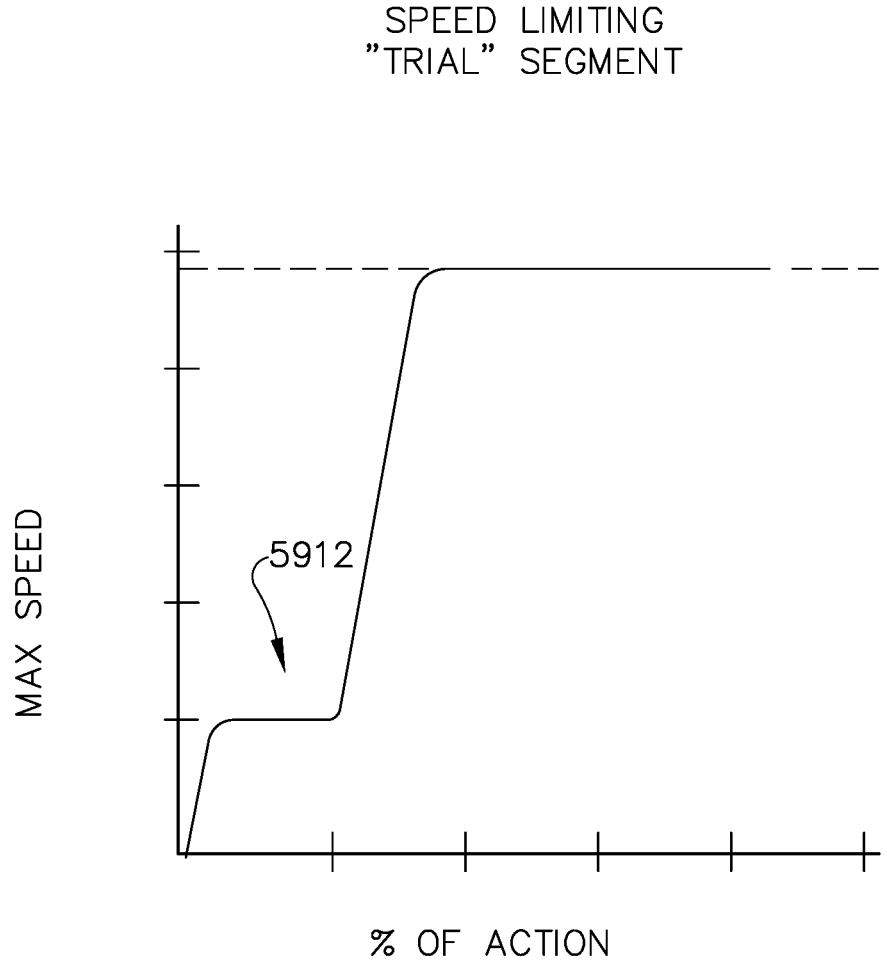

FIG. 68

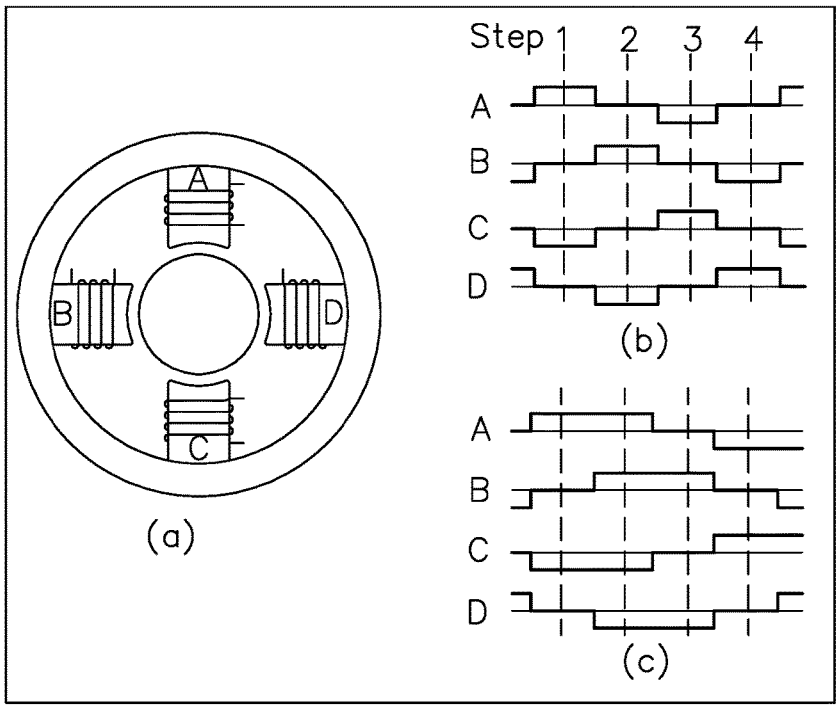

FIG. 69

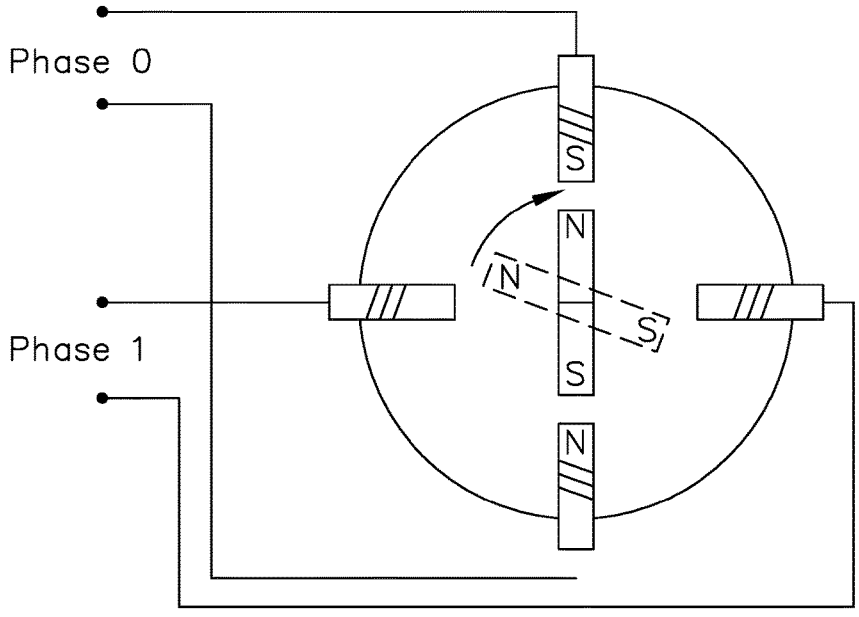

FIG. 70

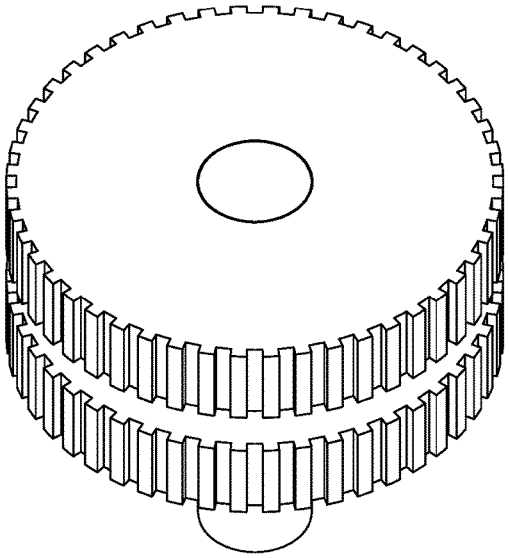

FIG. 72

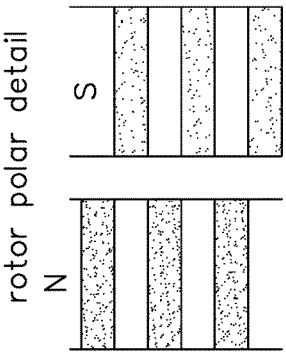

FIG. 73

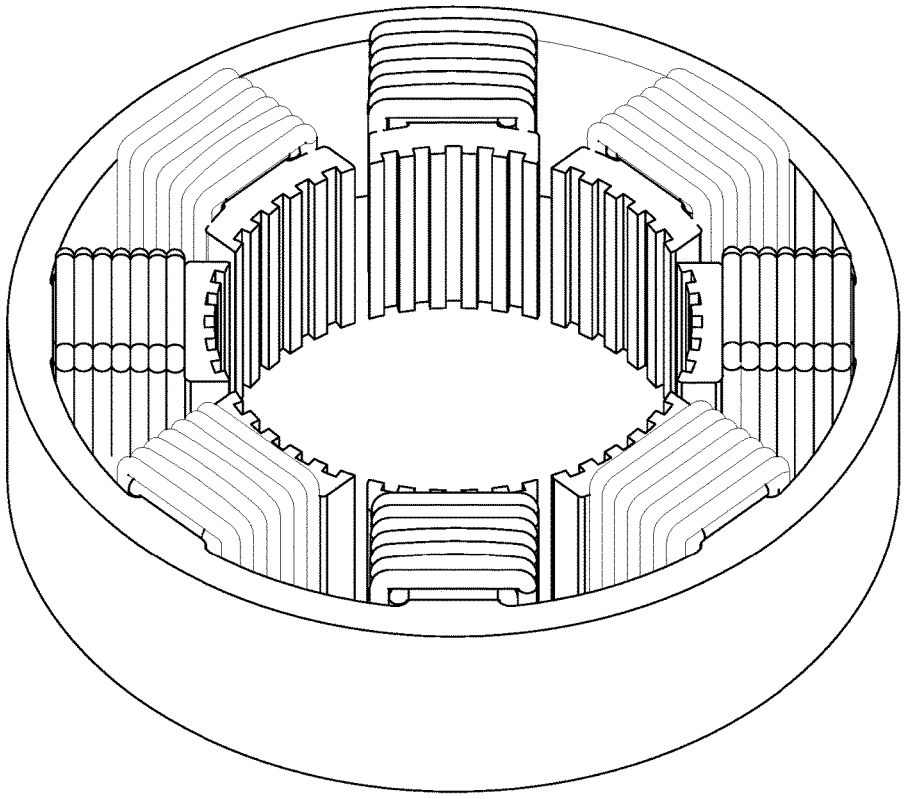

FIG. 71

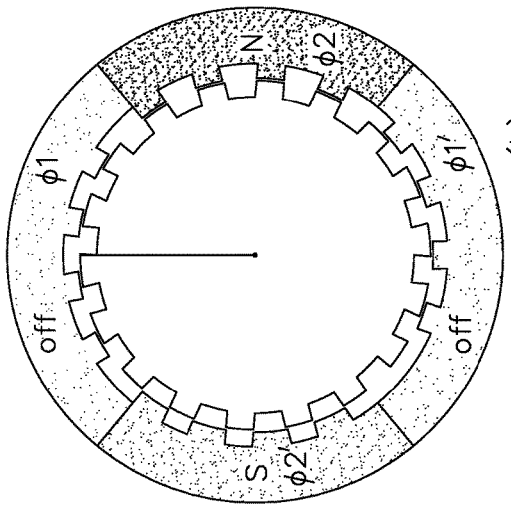

(b) align right

FIG. 74(b)

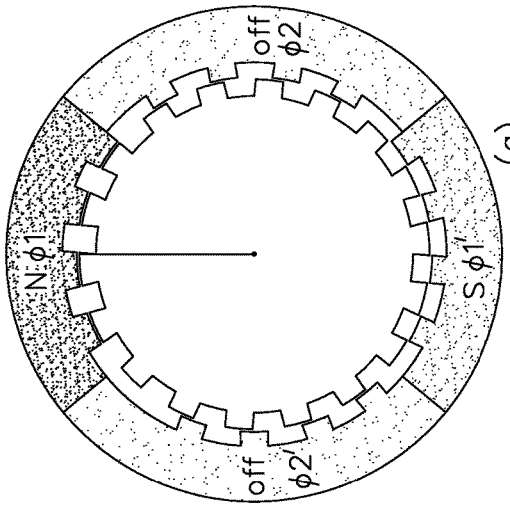

(a) align top

FIG. 74(a)

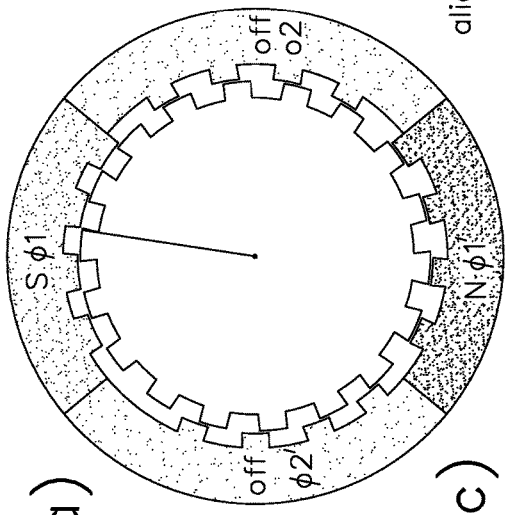

(c) align bottom

FIG. 74(c)

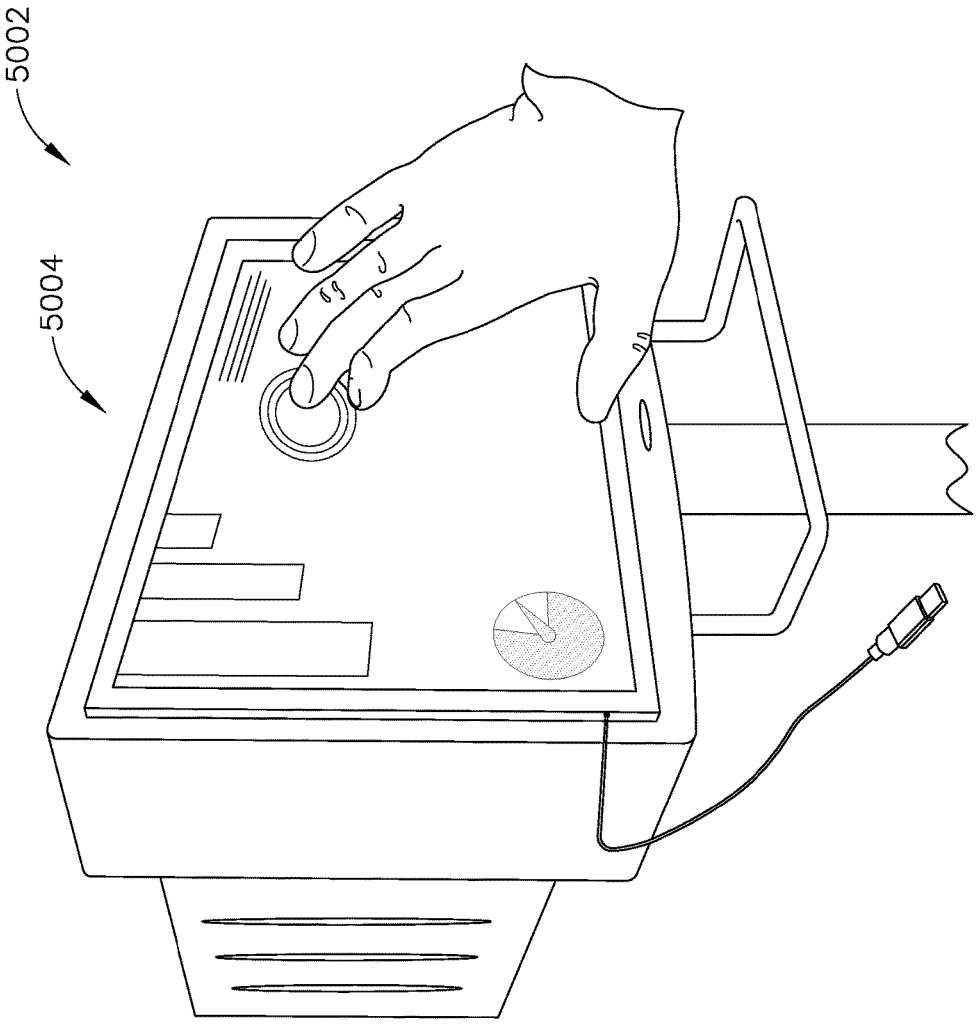

FIG. 75

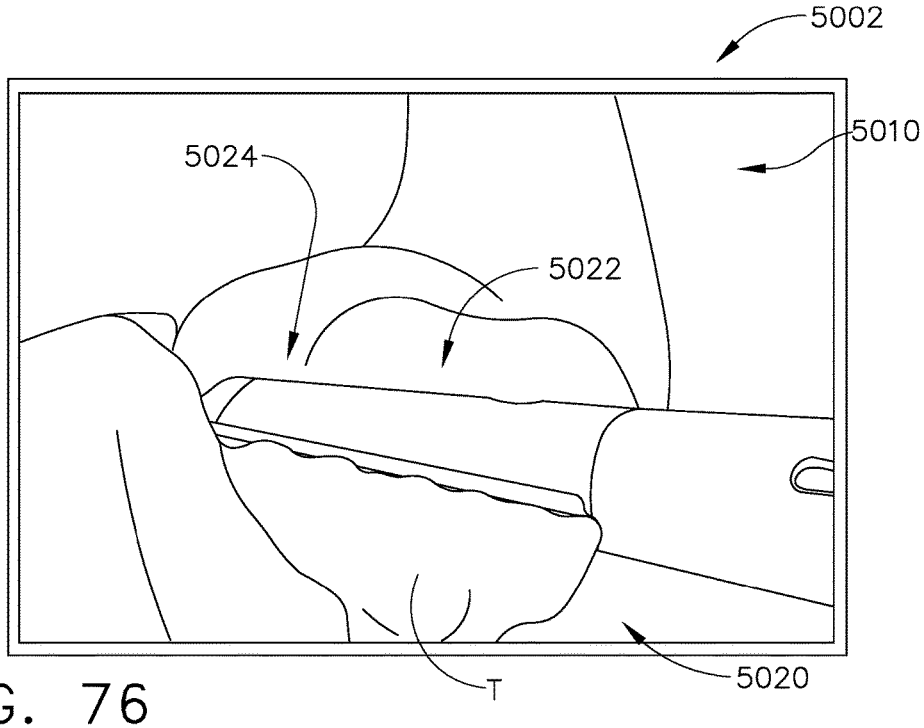
5002
5010
5024
5022
T
5020

FIG. 76

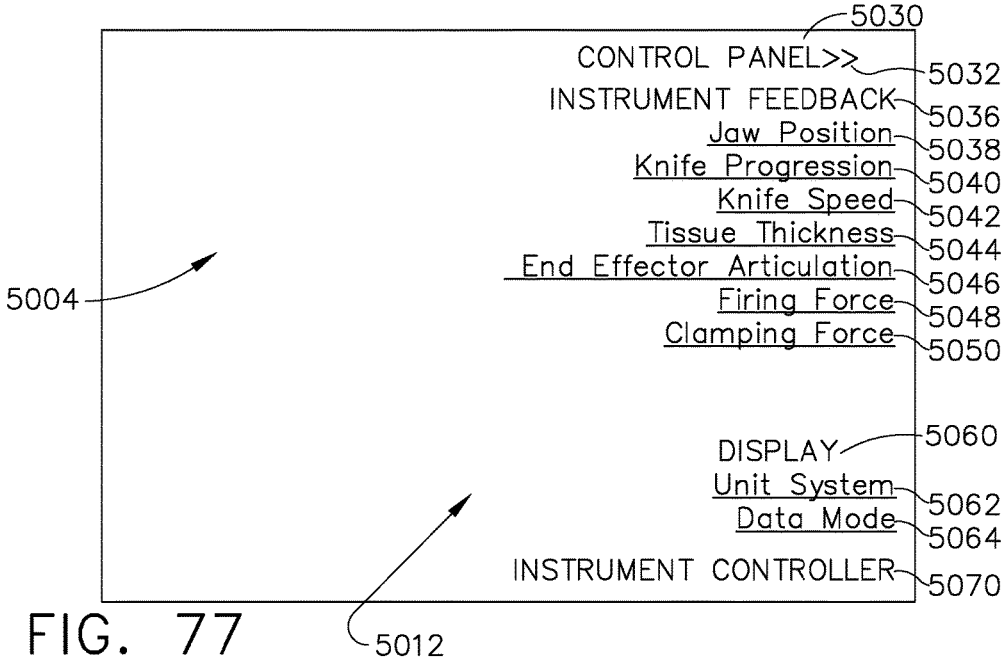
5030
CONTROL PANEL>>
5032
INSTRUMENT FEEDBACK
5036
Jaw Position
5038
Knife Progression
5040
Knife Speed
5042
Tissue Thickness
5044
End Effector Articulation
5046
Firing Force
5048
Clamping Force
5050
5004
DISPLAY
5060
Unit System
5062
Data Mode
5064
INSTRUMENT CONTROLLER
5070
5012

FIG. 77

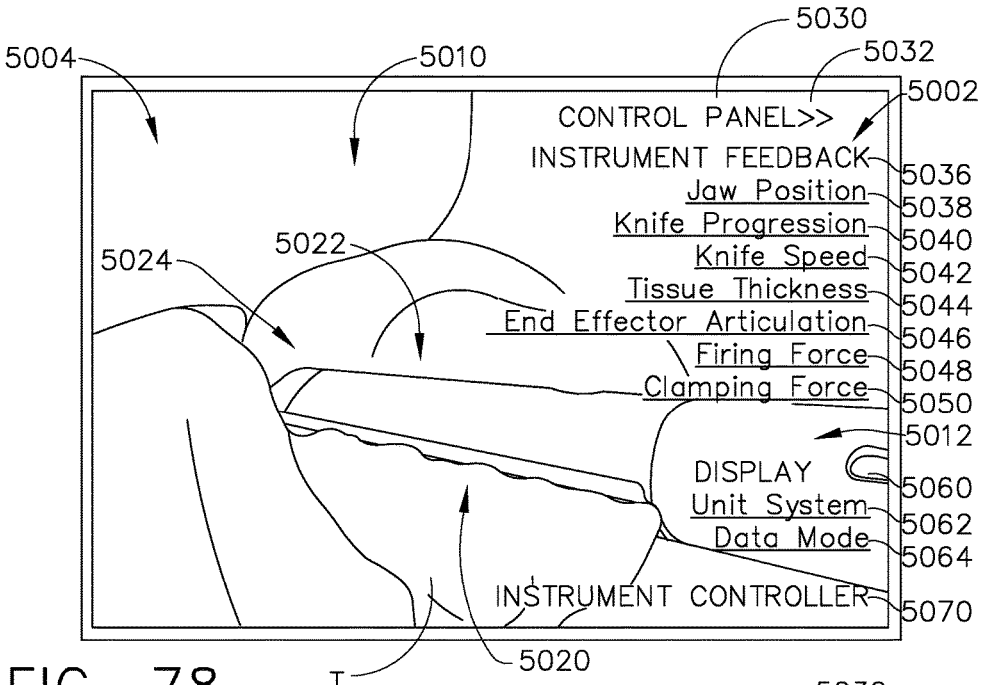
5004
5010
5030
5032
5002
CONTROL PANEL>>
INSTRUMENT FEEDBACK
5036
Jaw Position
5038
Knife Progression
5040
Knife Speed
5042
Tissue Thickness
5044
End Effector Articulation
5046
Firing Force
5048
Clamping Force
5050
5012
DISPLAY
5060
Unit System
5062
Data Mode
5064
INSTRUMENT CONTROLLER
5070
5022
5024
T
5020

FIG. 78

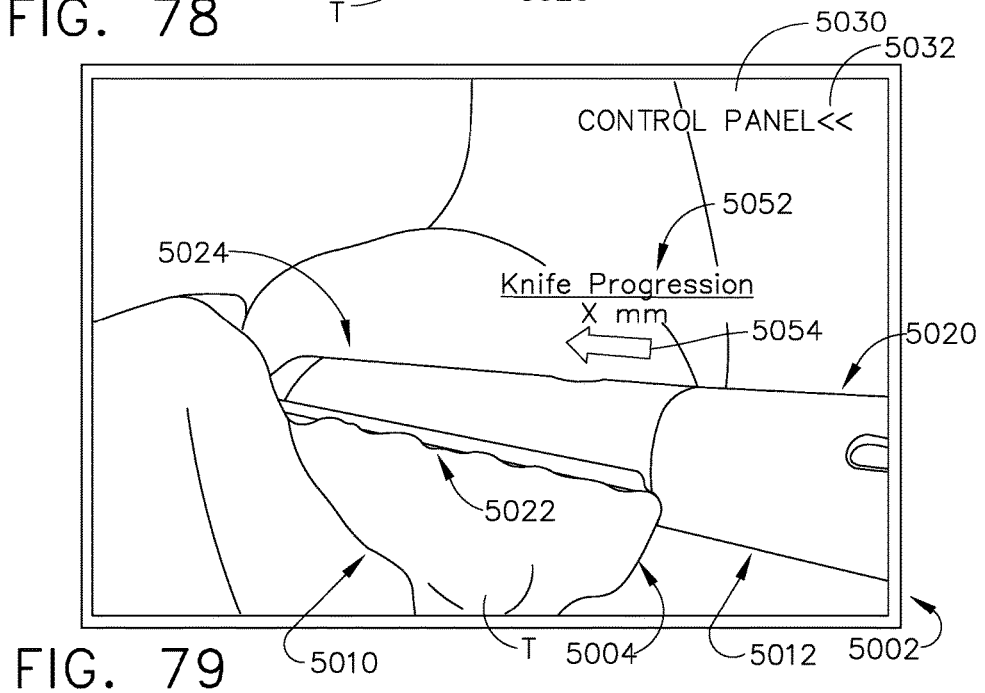
5030
5032
CONTROL PANEL<<
5052
5024
Knife Progression
X mm
5054
5020
5022
5010
T
5004
5012
5002

FIG. 79

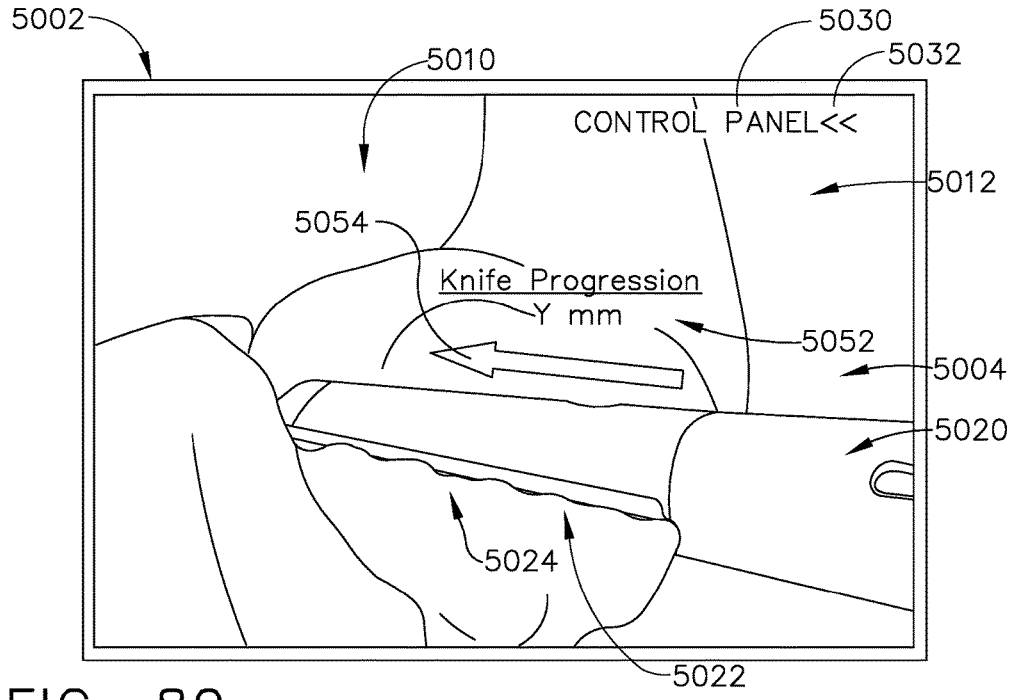
5002
5010
5030
5032
CONTROL PANEL<<
5012
5054
Knife Progression
Y mm
5052
5004
5020
5024
5022

FIG. 80

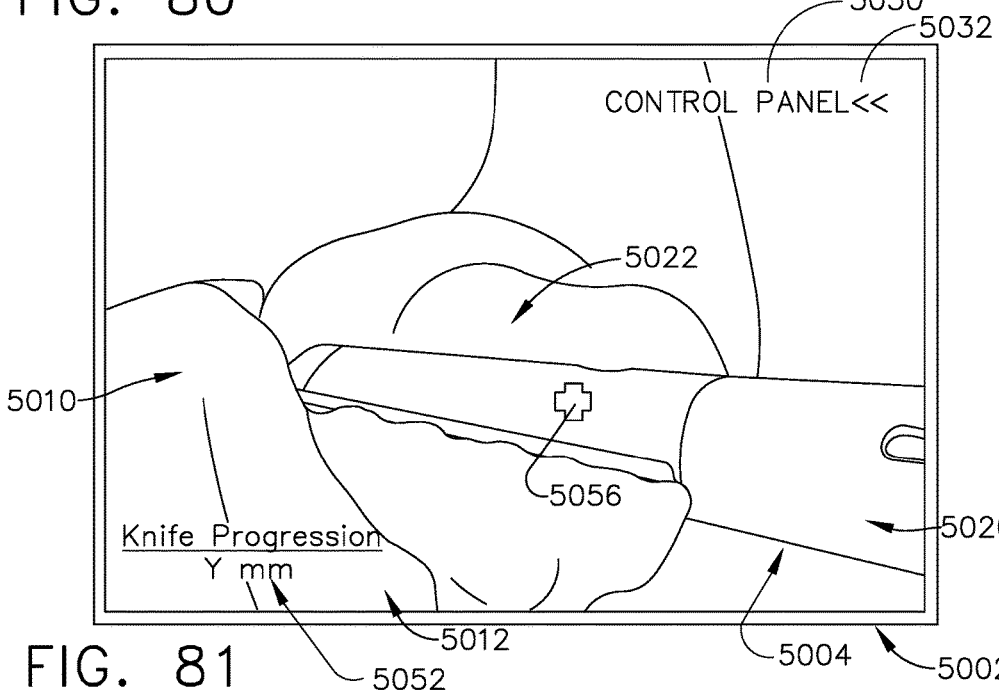
5030
5032
CONTROL PANEL<<
5022
5010
5056
5020
Knife Progression
Y mm
5012
5004
5002
5052

FIG. 81

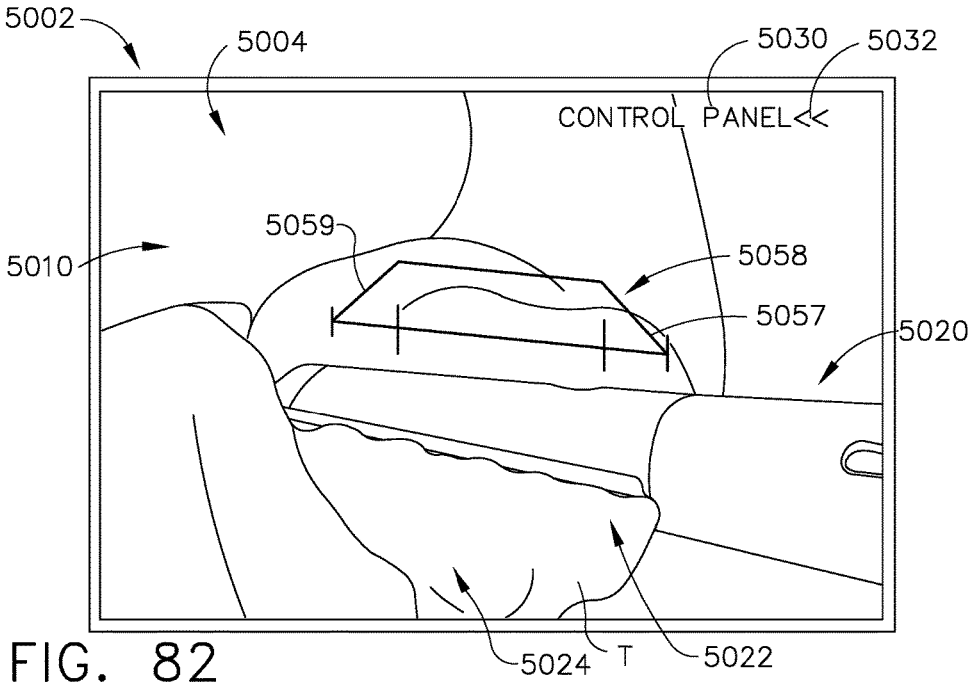
5002
5004
5030
5032
CONTROL PANEL<<
5059
5010
5058
5057
5020
5024
T
5022

FIG. 82

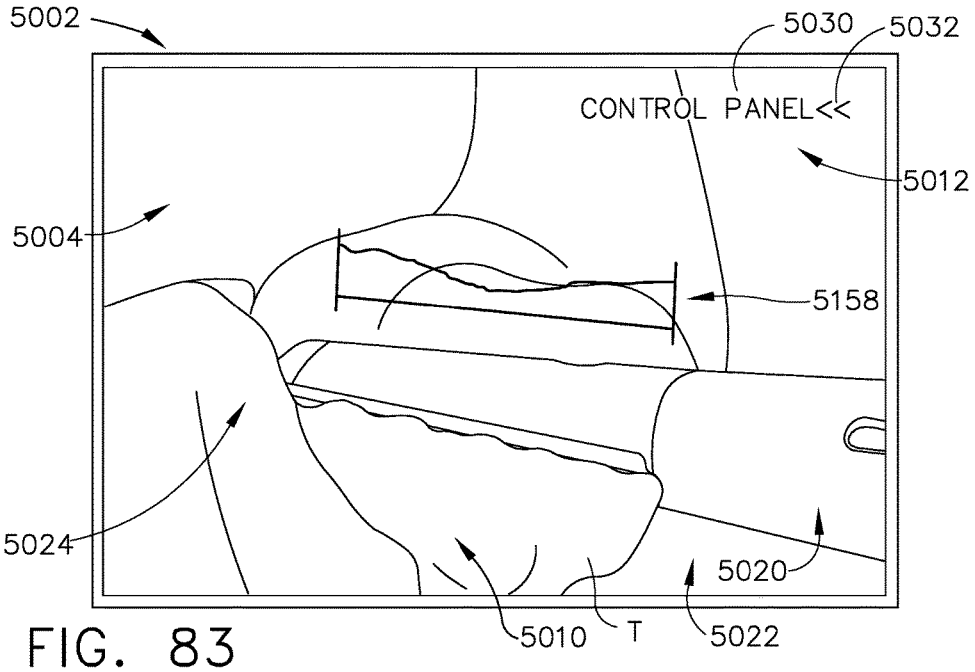
5002
5030
5032
CONTROL PANEL<<
5012
5004
5158
5024
5020
5010
T
5022

FIG. 83

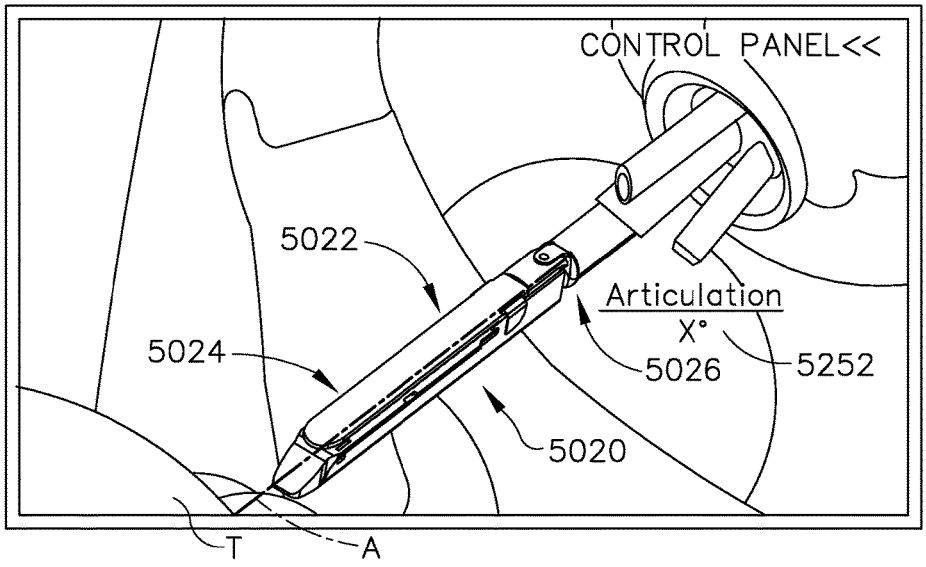
CONTROL PANEL<<
5022
5024
Articulation
X°
5026
5252
5020
T
A

FIG. 84

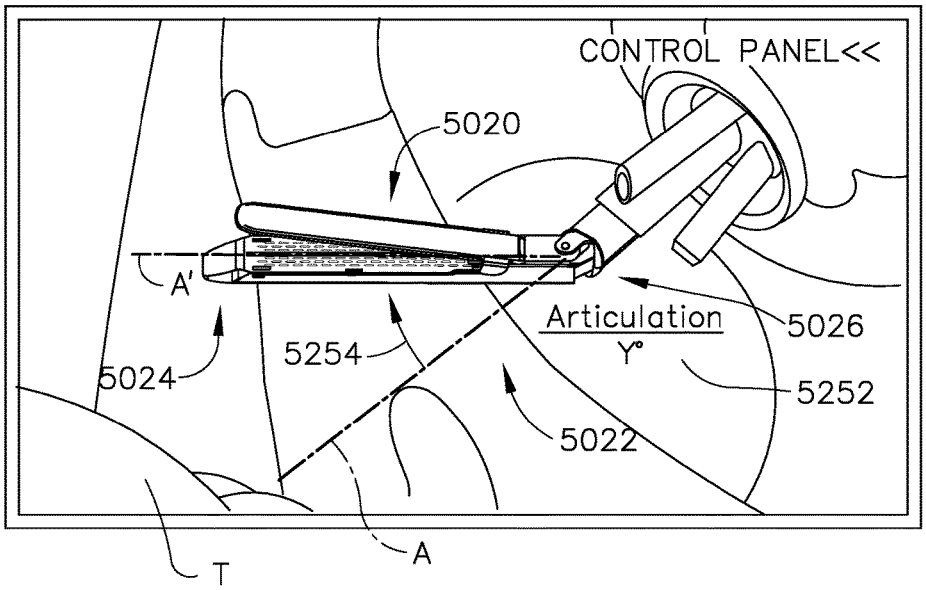
CONTROL PANEL<<
5020
A'
Articulation
Y°
5026
5024
5254
5252
5022
T
A

FIG. 85

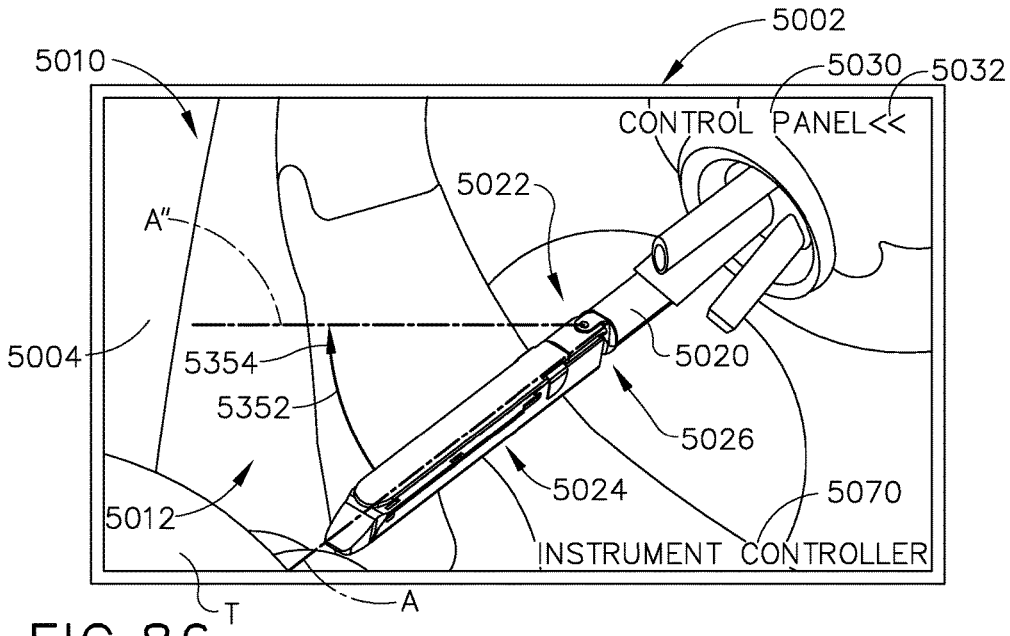
5002
5010
5030
5032
CONTROL PANEL<<
5022
A"
5004
5354
5352
5020
5026
5024
5070
5012
INSTRUMENT CONTROLLER
T
A

FIG.86

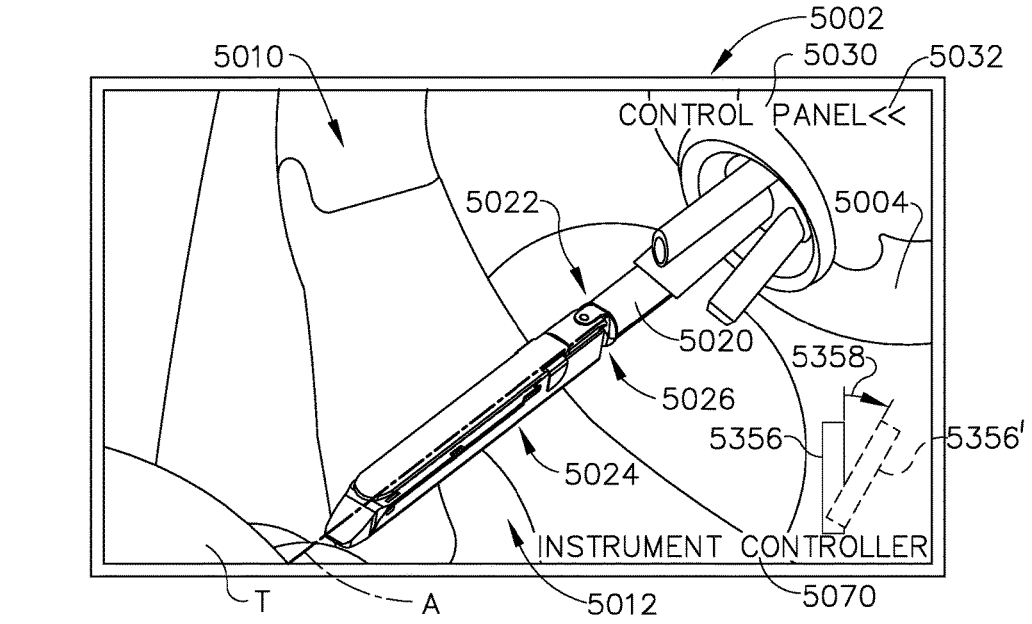
5002
5010
5030
5032
CONTROL PANEL<<
5022
5004
5020
5358
5026
5356
5356'
5024
INSTRUMENT CONTROLLER
T
A
5012
5070

FIG. 87

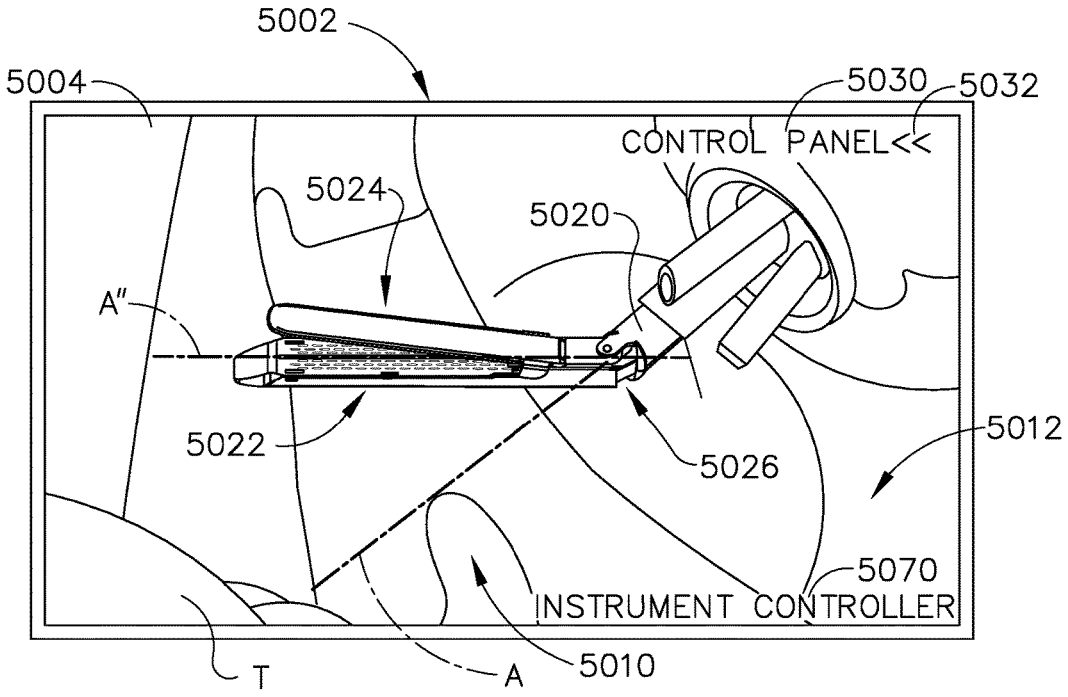
5002
5004
5030
5032
CONTROL PANEL<<
5024
5020
A"
5022
5026
5012
5070
INSTRUMENT CONTROLLER
T
A
5010

FIG. 88

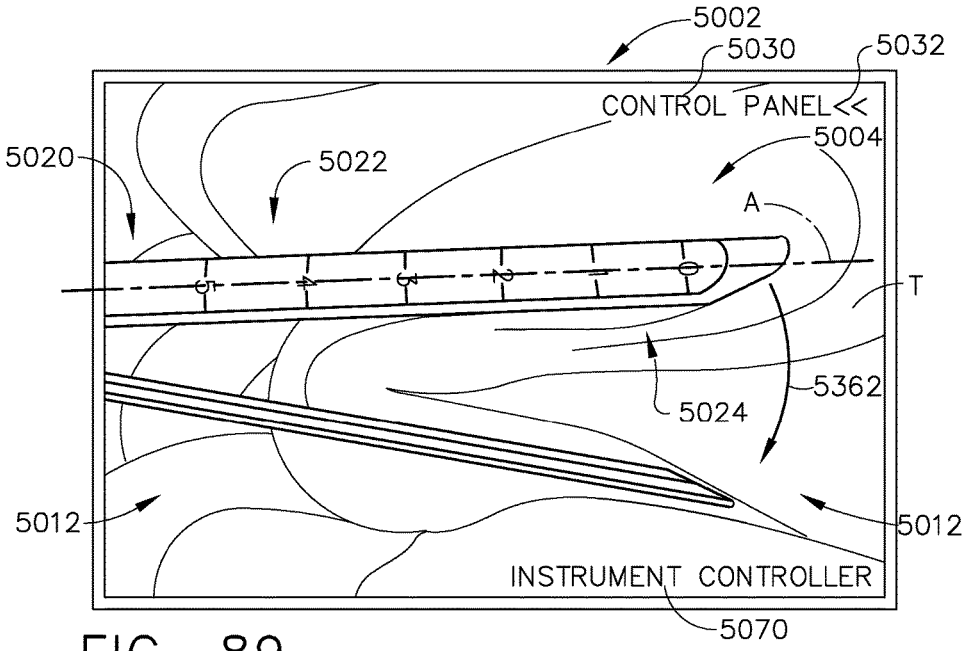
5002
5030
5032
CONTROL PANEL<<
5004
5020
5022
A
T
5362
5024
5012
5012
INSTRUMENT CONTROLLER
5070

FIG. 89

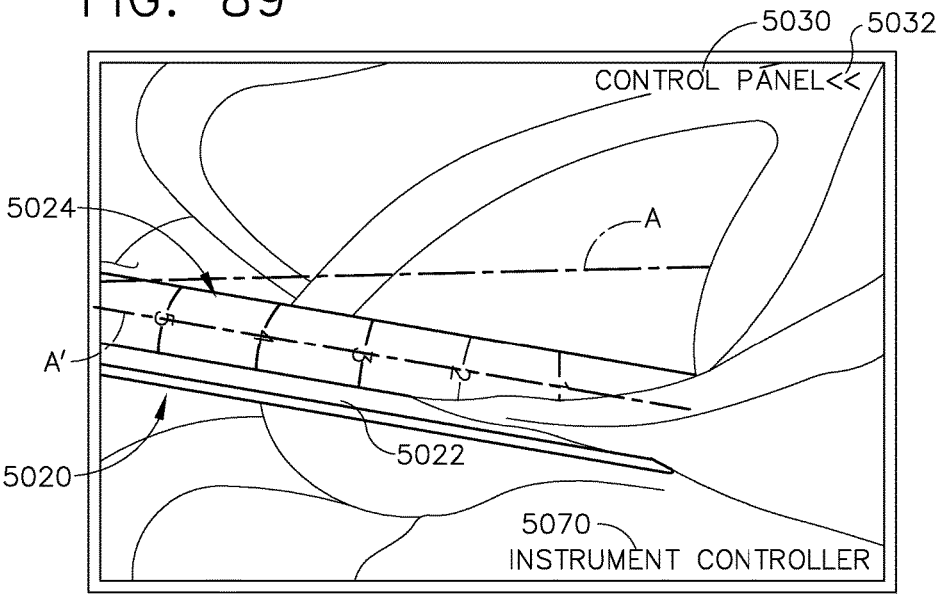
5030
5032
CONTROL PANEL<<
5024
A
A'
5020
5022
5070
INSTRUMENT CONTROLLER

FIG. 90

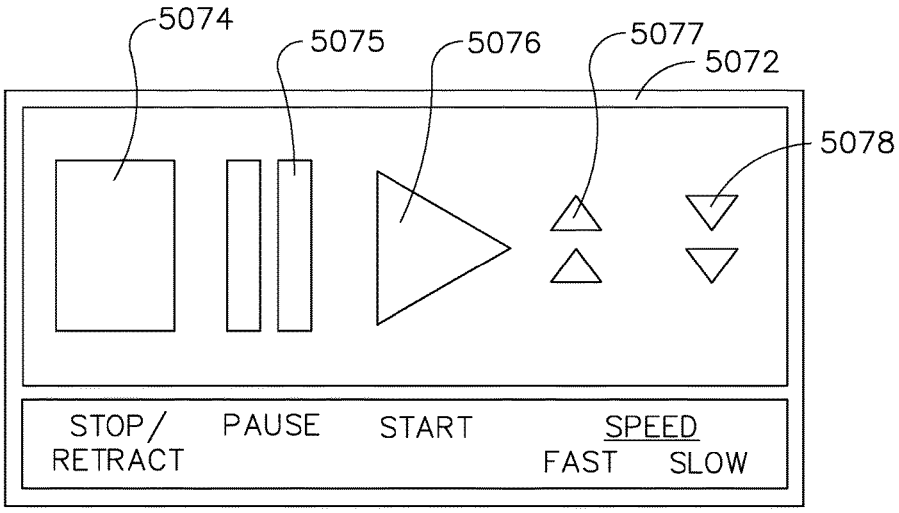
5074
5075
5076
5077
5072
5078
STOP/
RETRACT
PAUSE
START
SPEED
FAST
SLOW

FIG. 91

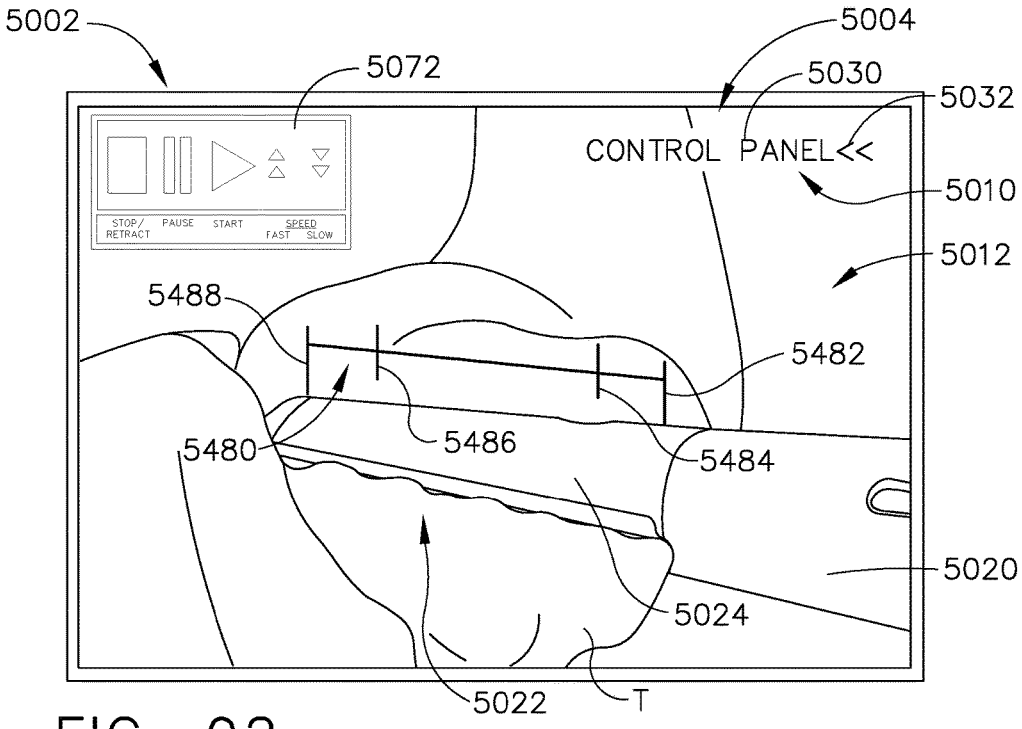
5002
5004
5072
5030
5032
CONTROL PANEL<<
5010
5012
5488
5482
5480
5486
5484
5020
5024
5022
T

FIG. 92

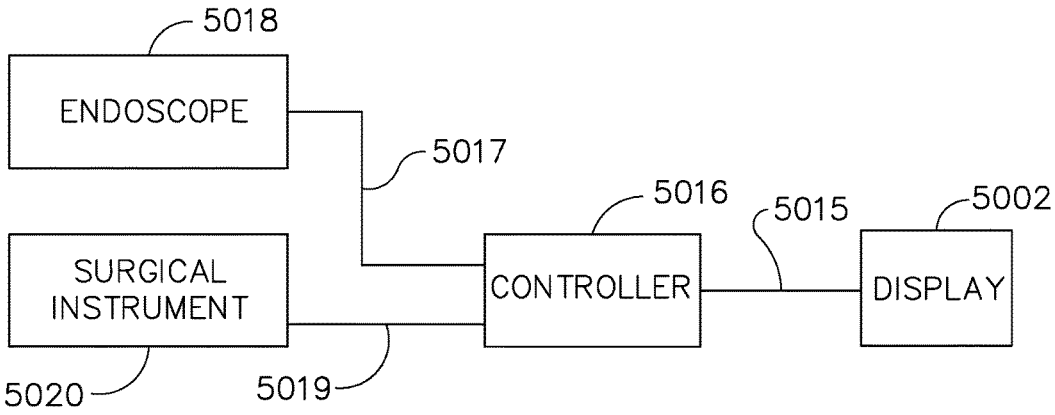
5018
ENDOSCOPE
5017
5016
5015
5002
SURGICAL INSTRUMENT
CONTROLLER
DISPLAY
5020
5019

FIG. 93

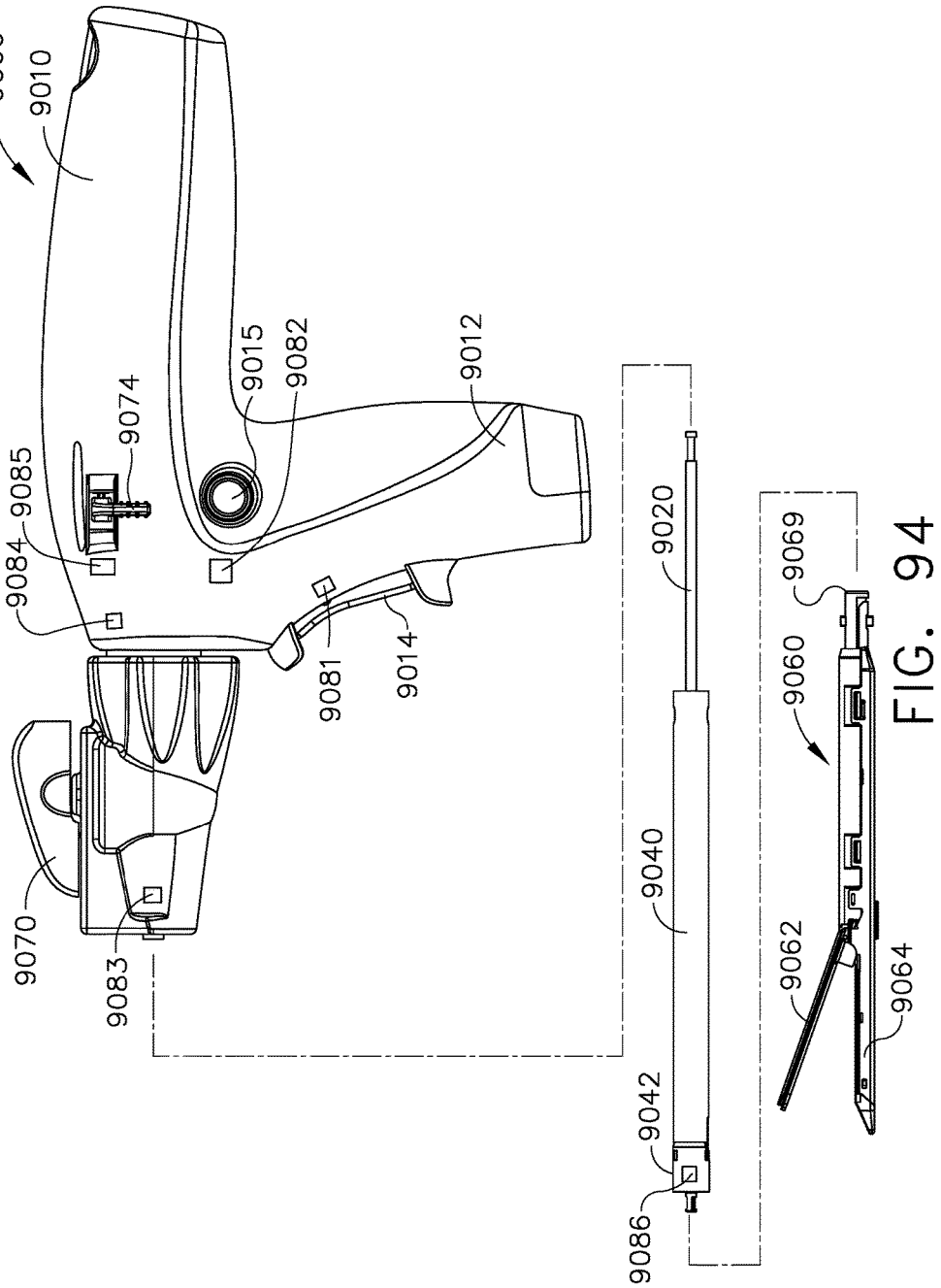
9000
9010
9015
9082
9012
9074
9085
9084
9081
9014
9020
9069
9060
9070
9083
9040
9062
9064
9042
9086

FIG. 94

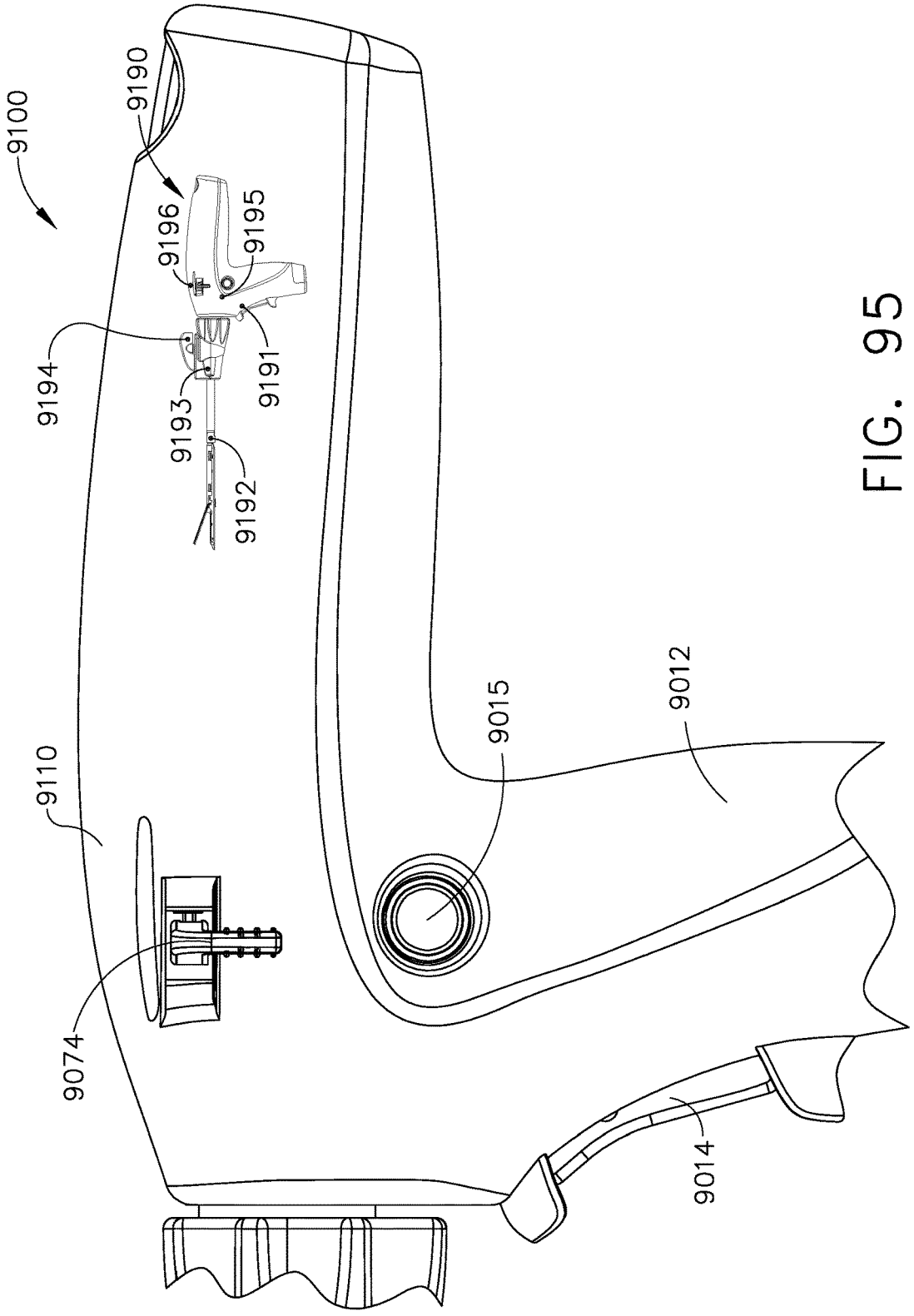
9100
9190
9196
9195
9194
9191
9193
9192
9110
9015
9012
9074
9014

FIG. 95

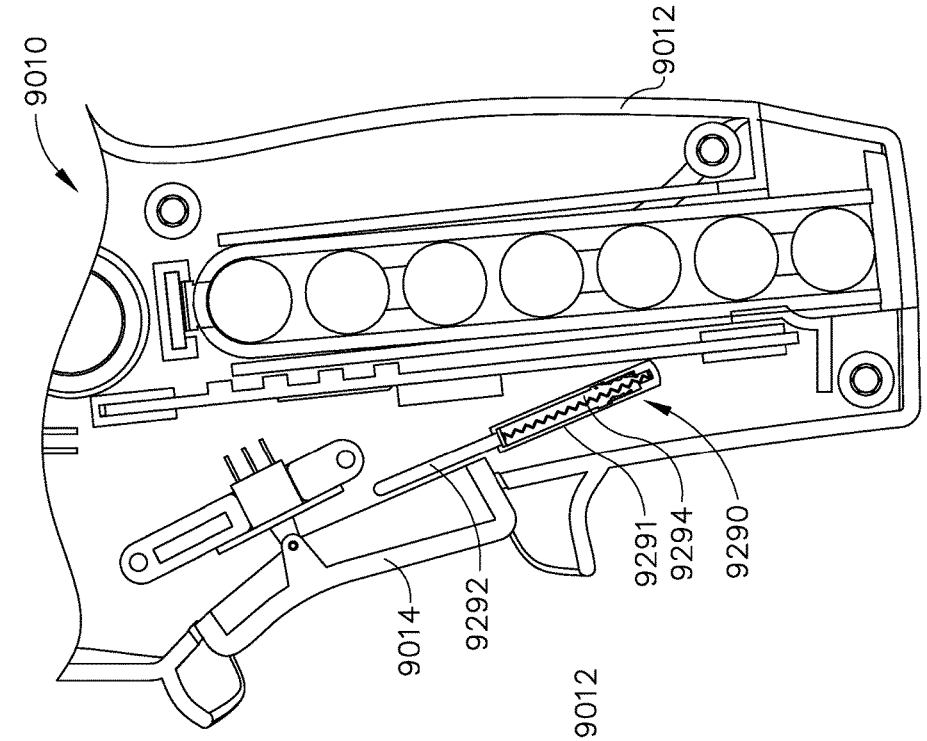
9010
9012
9014
9292
9291
9294
9290

FIG. 97

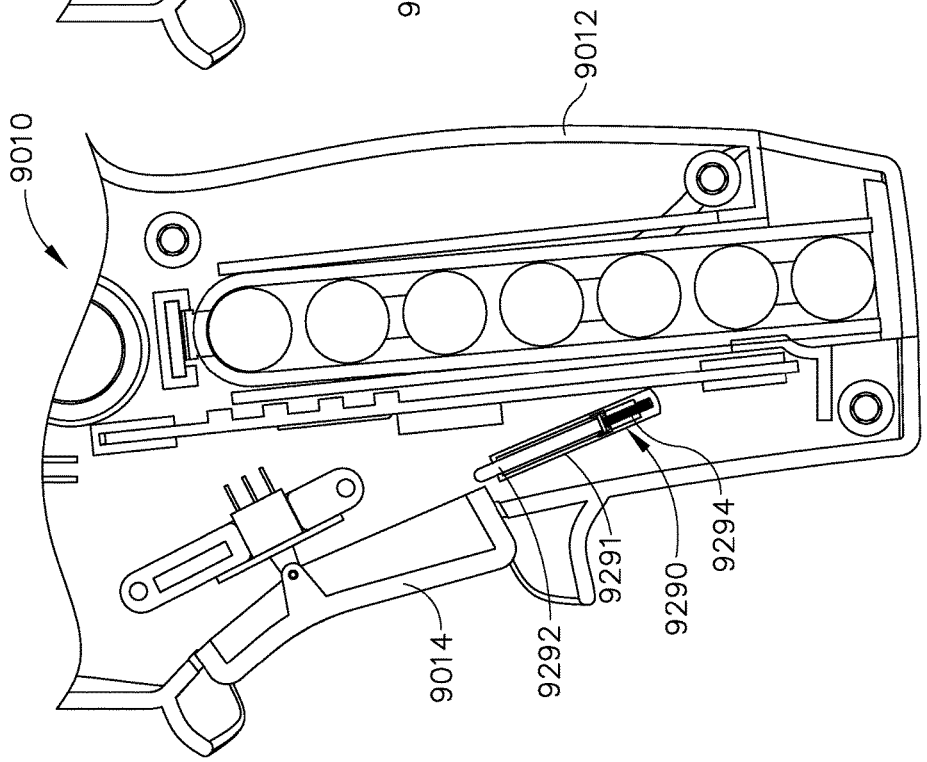
9010
9012
9014
9292
9291
9290
9294

FIG. 96

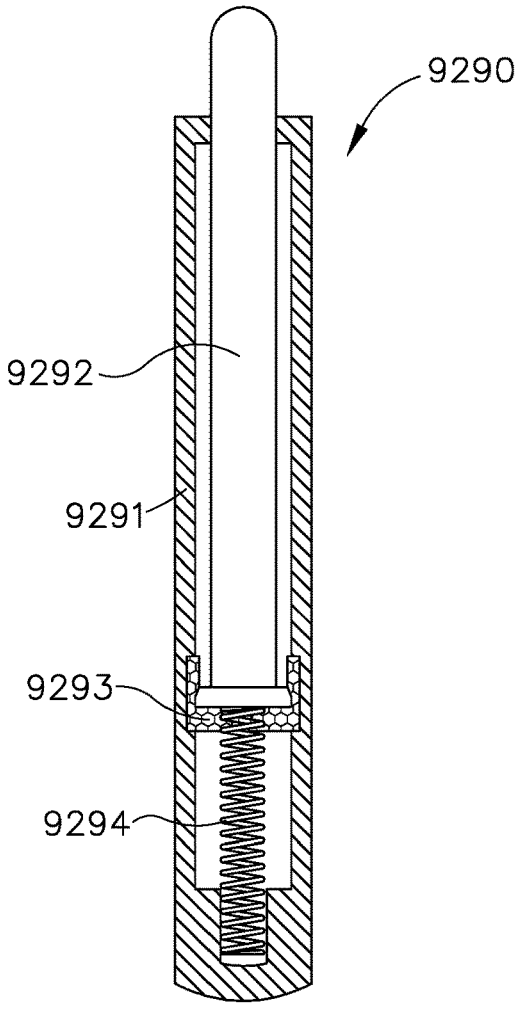

FIG. 98

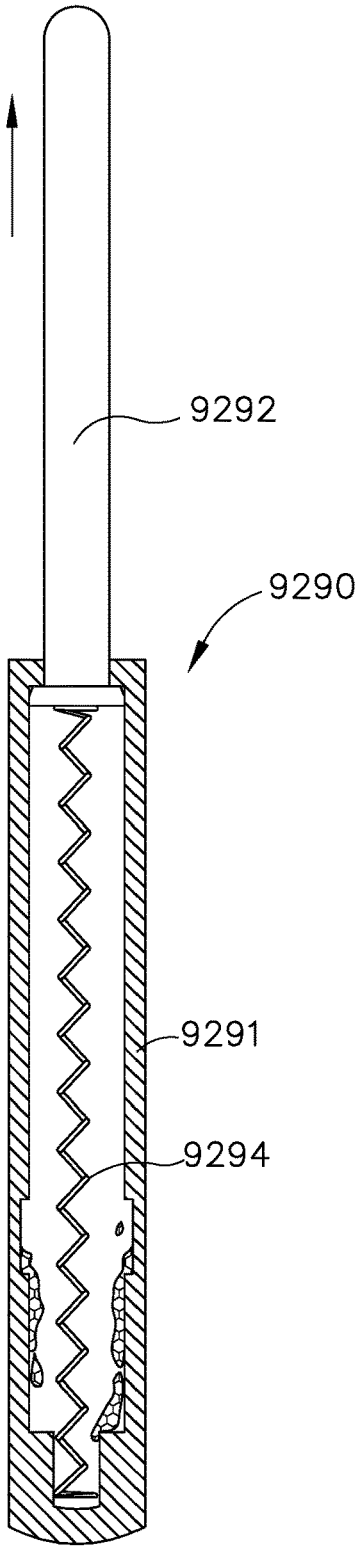

FIG. 99

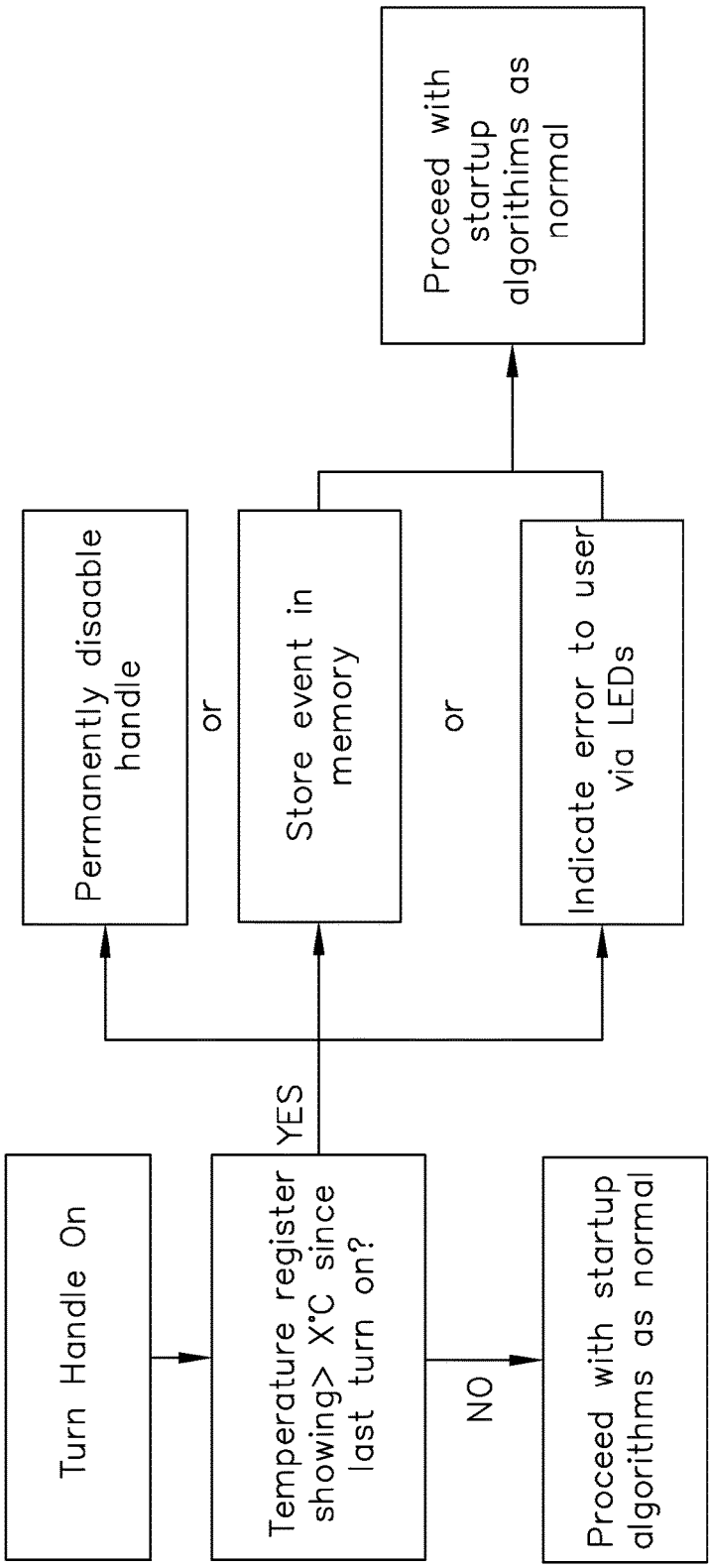
Turn Handle On
Temperature register showing> X°C since last turn on?
YES
NO
Proceed with startup algorithms as normal
Permanently disaable handle
or
Store event in memory
or
Indicate error to user via LEDs
Proceed with startup algorithims as normal

FIG. 99A

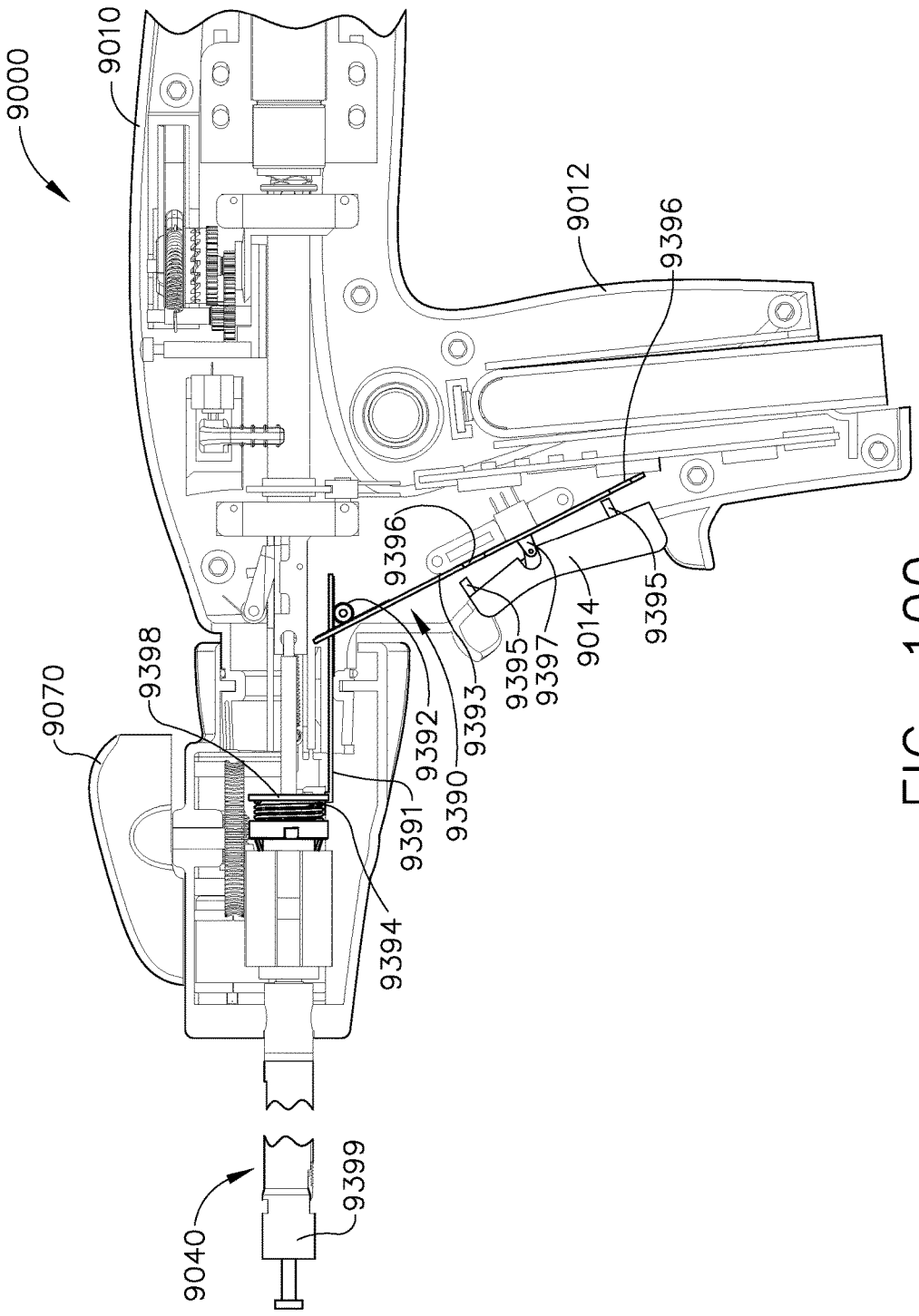
9000
9010
9012
9396
9396
9395
9014
9395
9397
9393
9392
9390
9391
9394
9070
9398
9399
9040

FIG. 100

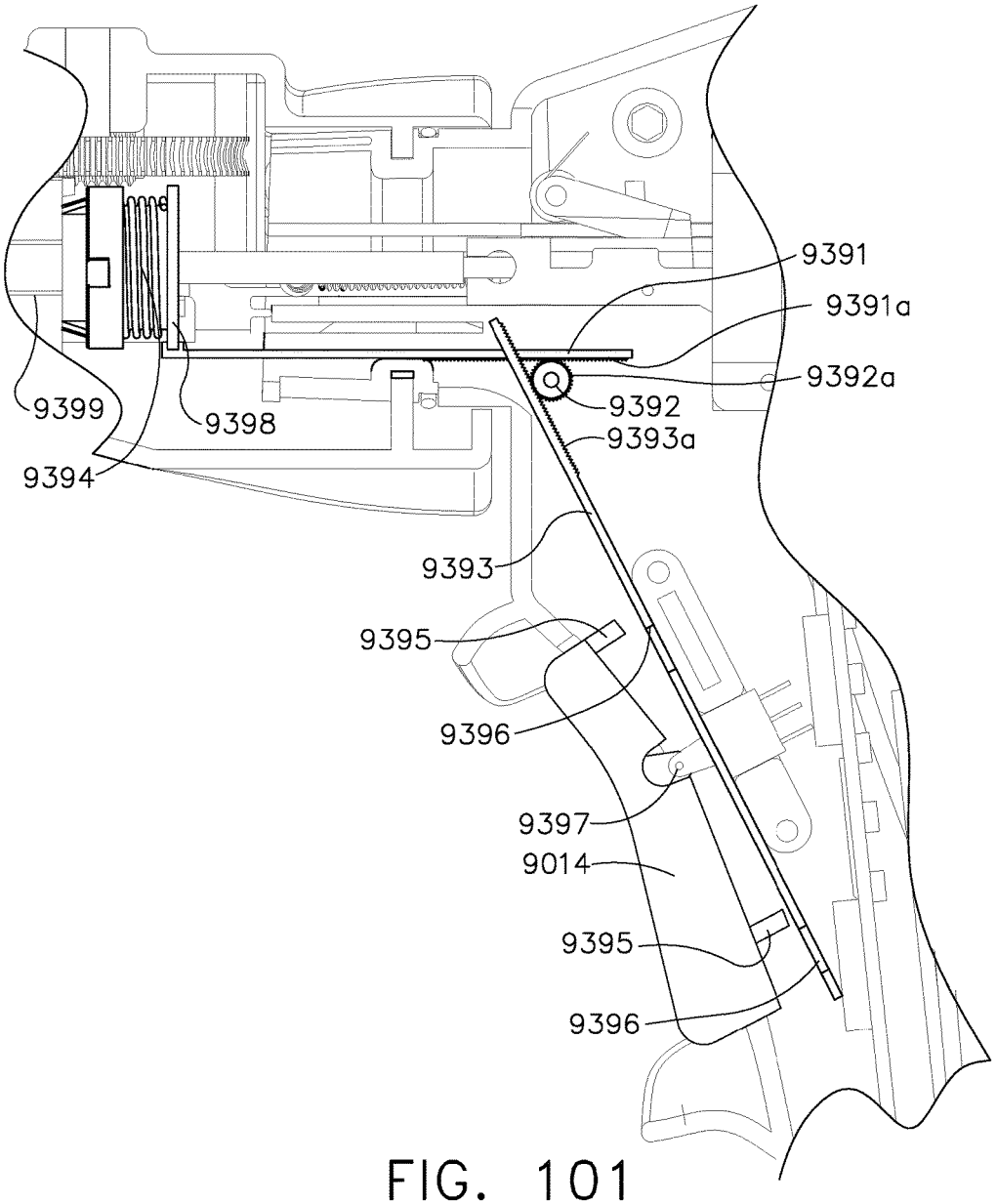
9391
9391a
9392a
9392
9393a
9399
9398
9394
9393
9395
9396
9397
9014
9395
9396

FIG. 101

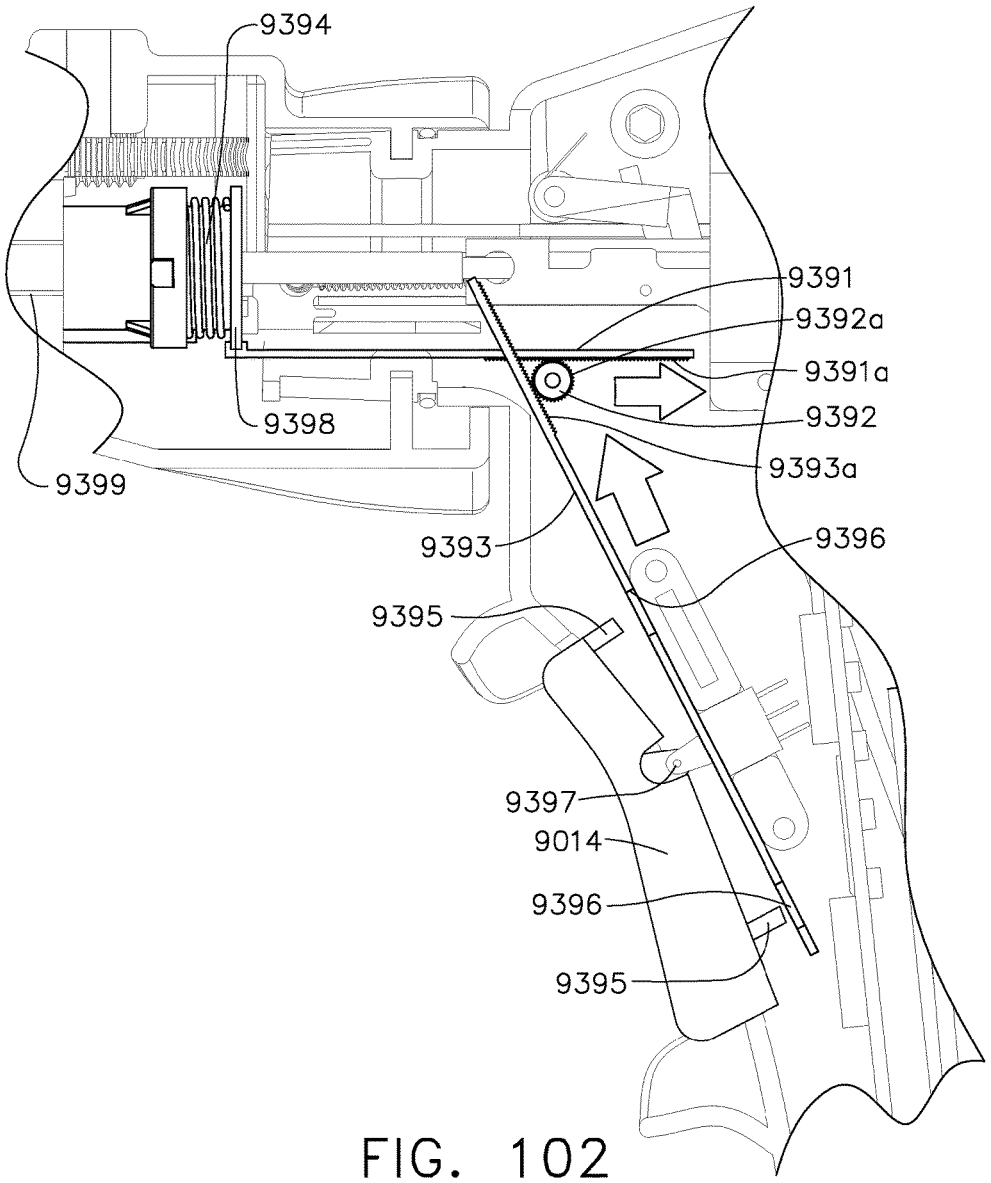
9394
9391
9392a
9391a
9392
9393a
9396
9398
9399
9393
9395
9397
9014
9396
9395

FIG. 102

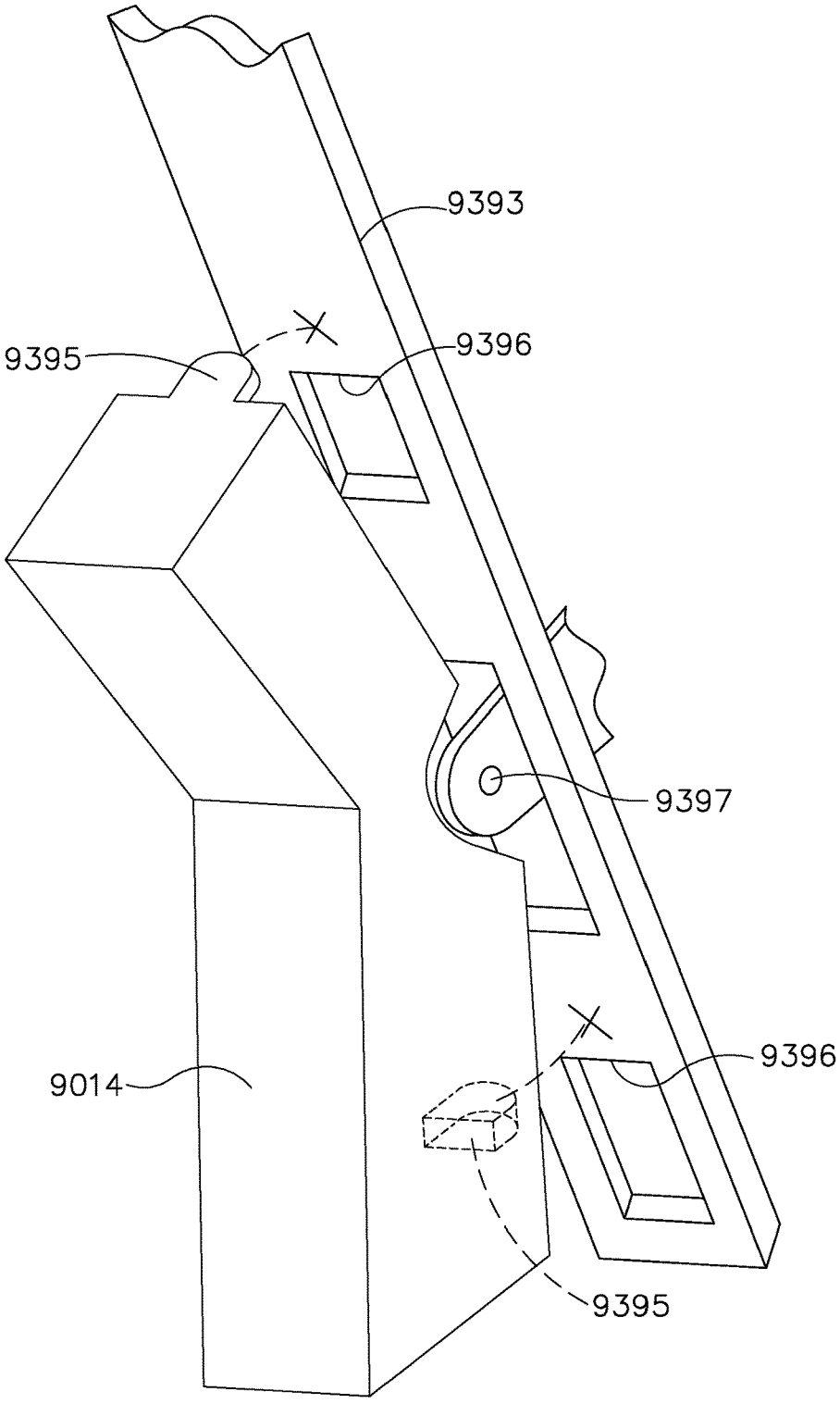

FIG. 103

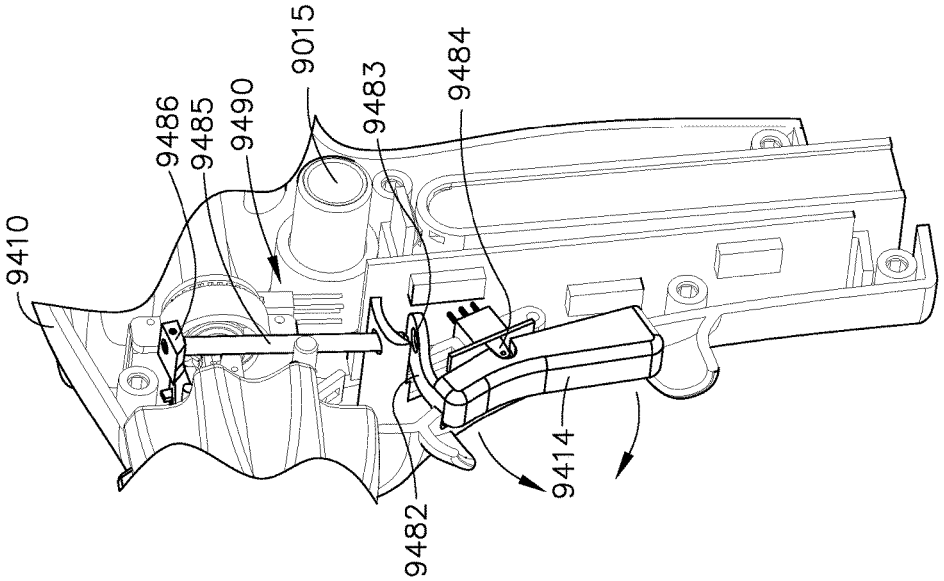

FIG. 105

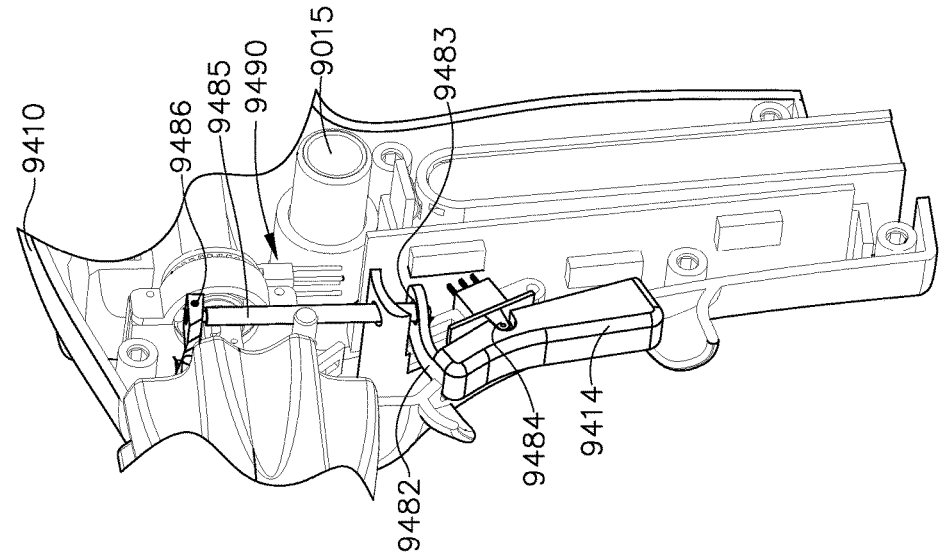

FIG. 104

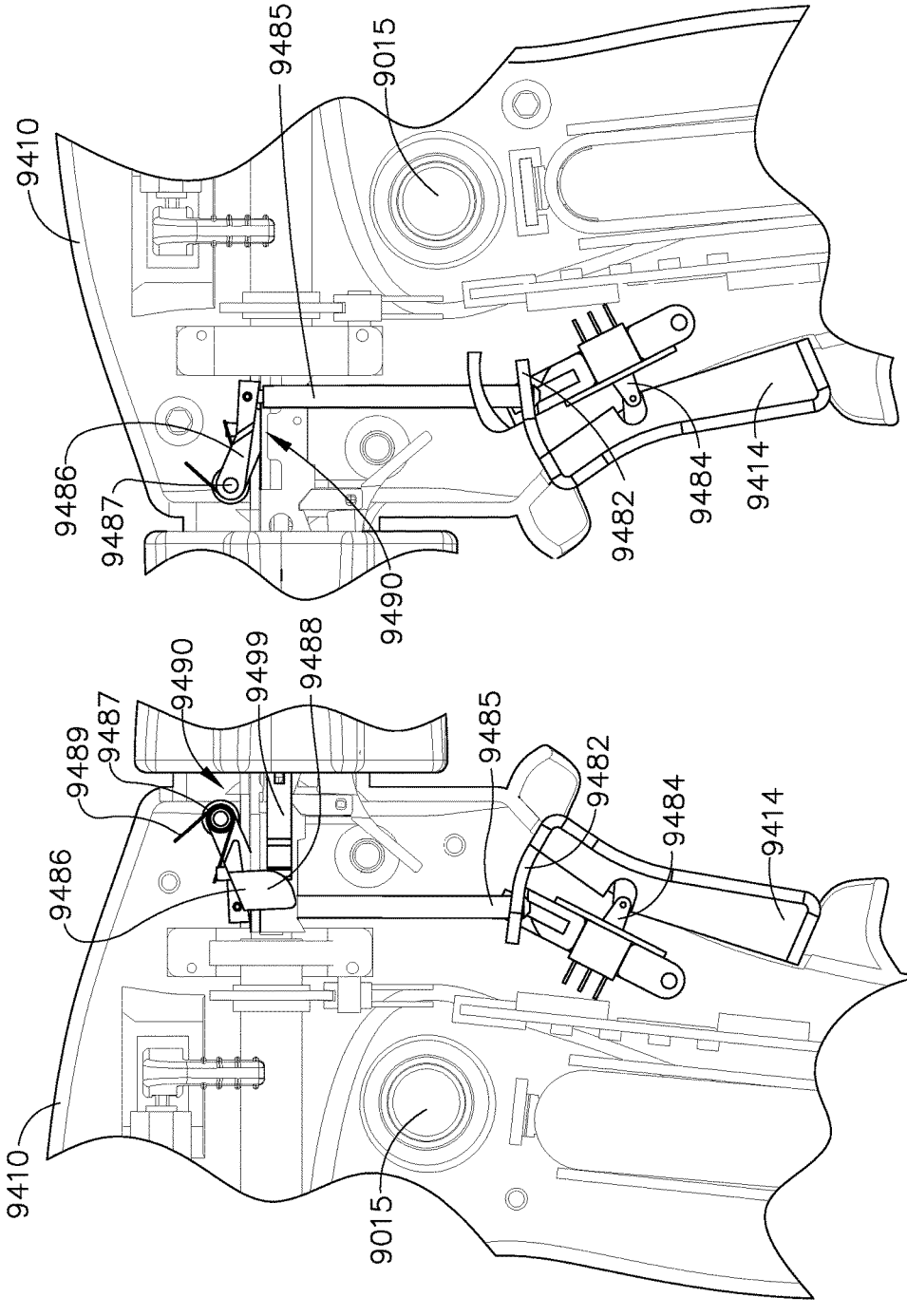

FIG. 107

FIG. 106

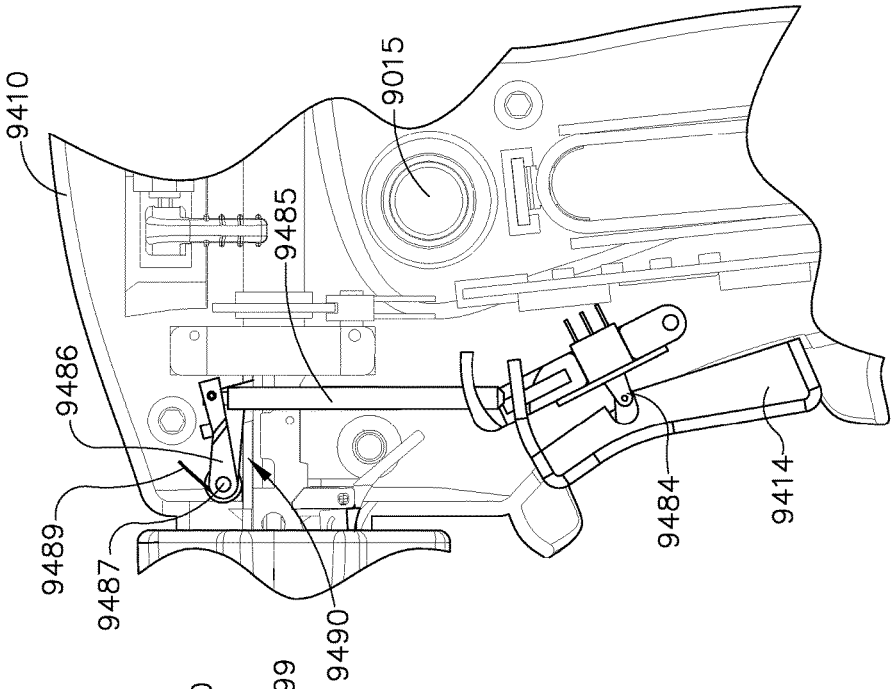

FIG. 109

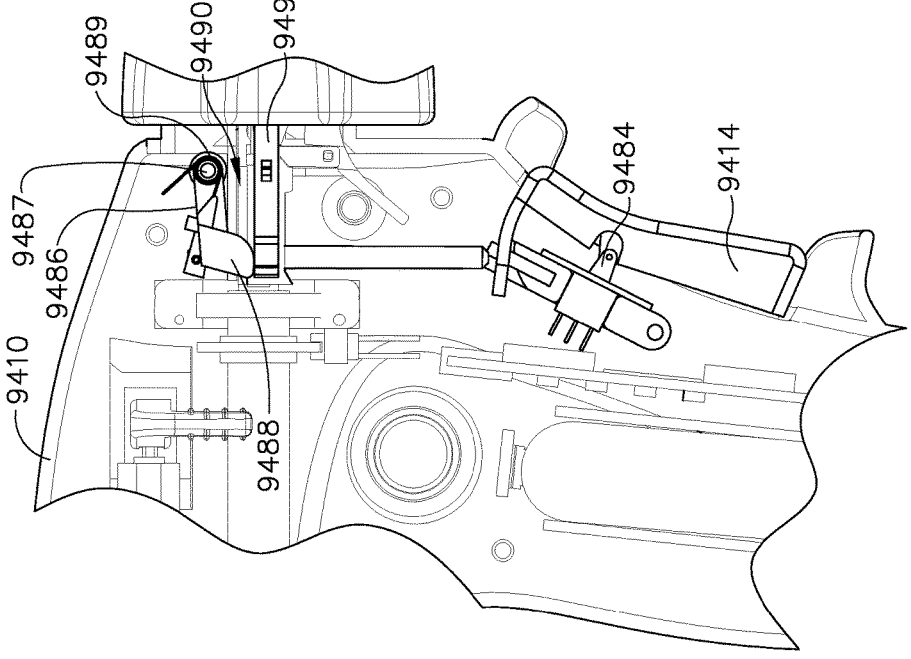

FIG. 108

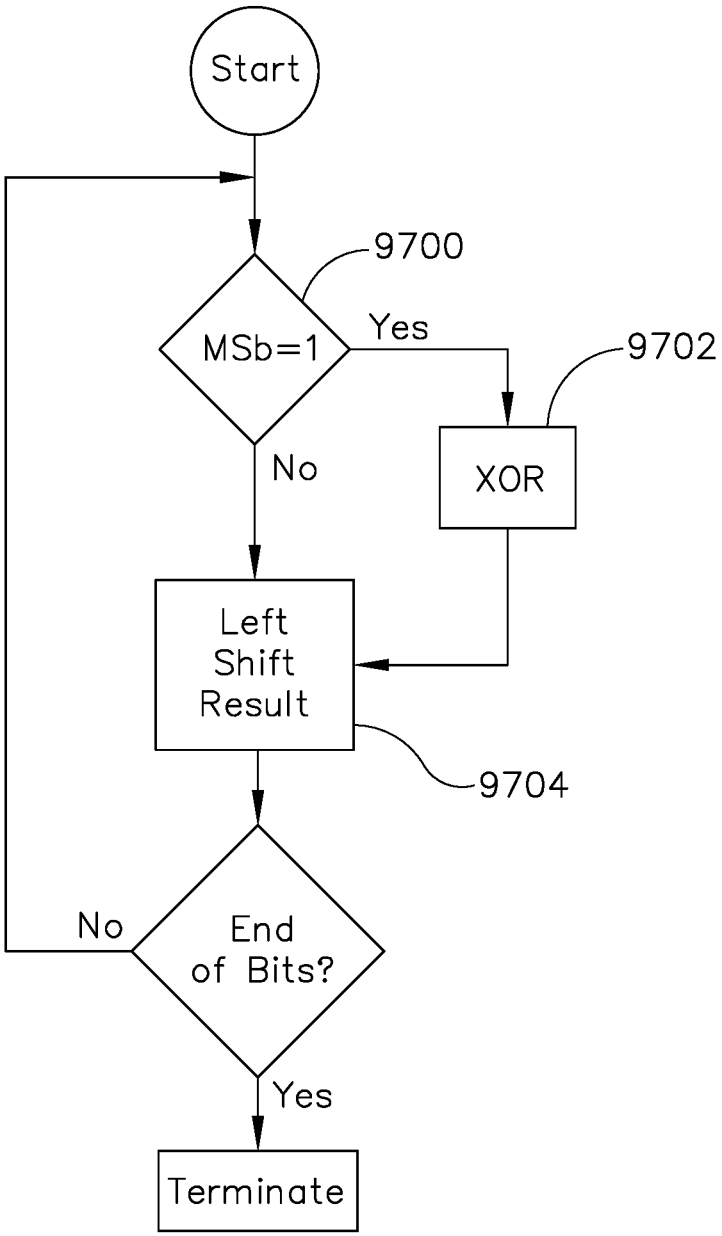
Start
9700
MSb=1
Yes
9702
XOR
No
Left
Shift
Result
9704
End
of Bits?
No
Yes
Terminate

FIG. 110

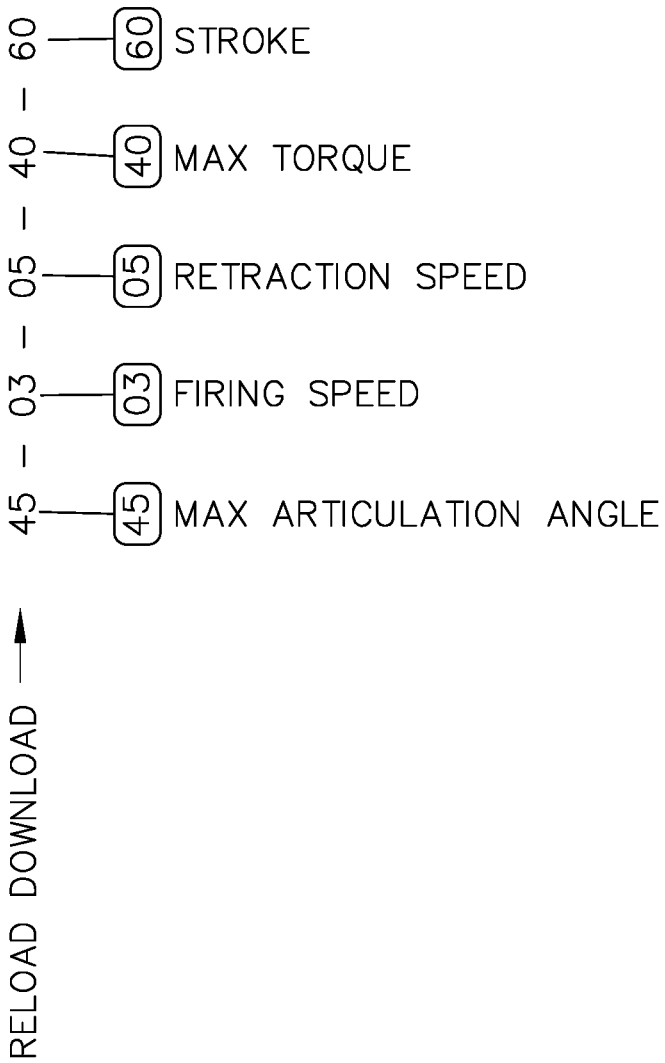
RELOAD DOWNLOAD
45 - 03 - 05 - 40 - 60
45
MAX ARTICULATION ANGLE
03
FIRING SPEED
05
RETRACTION SPEED
40
MAX TORQUE
60
STROKE

FIG. 110A

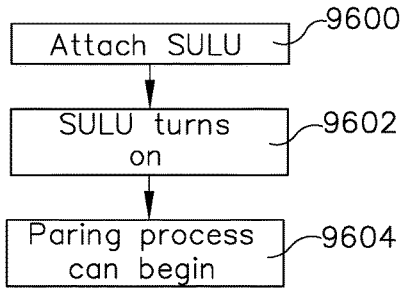

FIG. 111

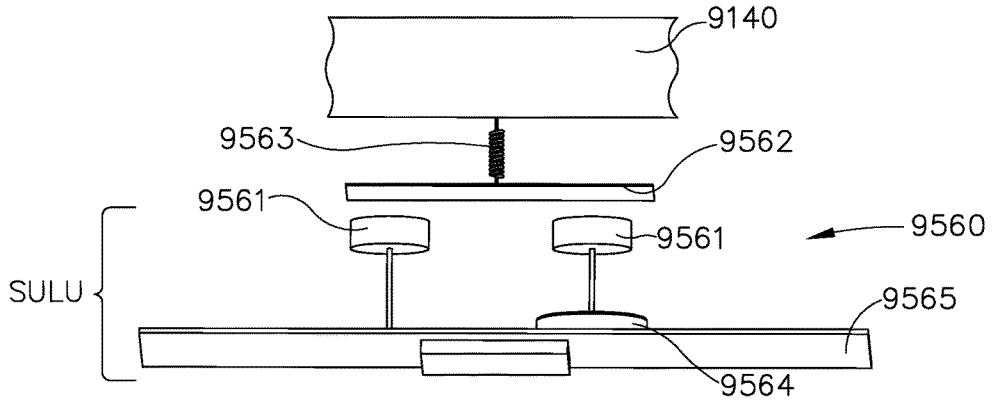

FIG. 112

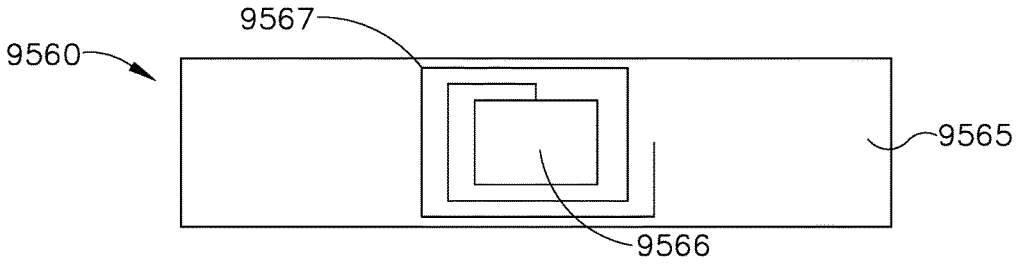

FIG. 113

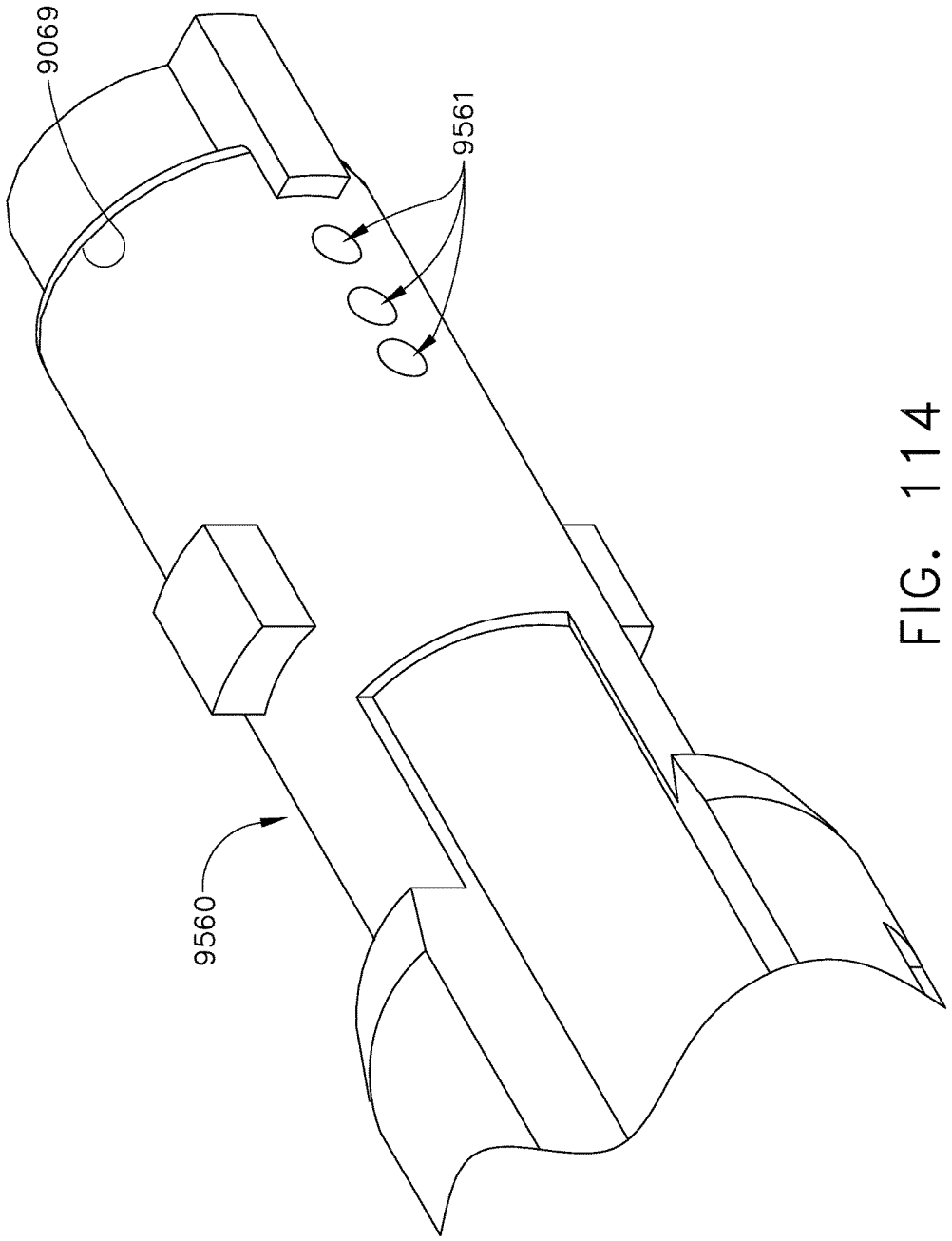

FIG. 114

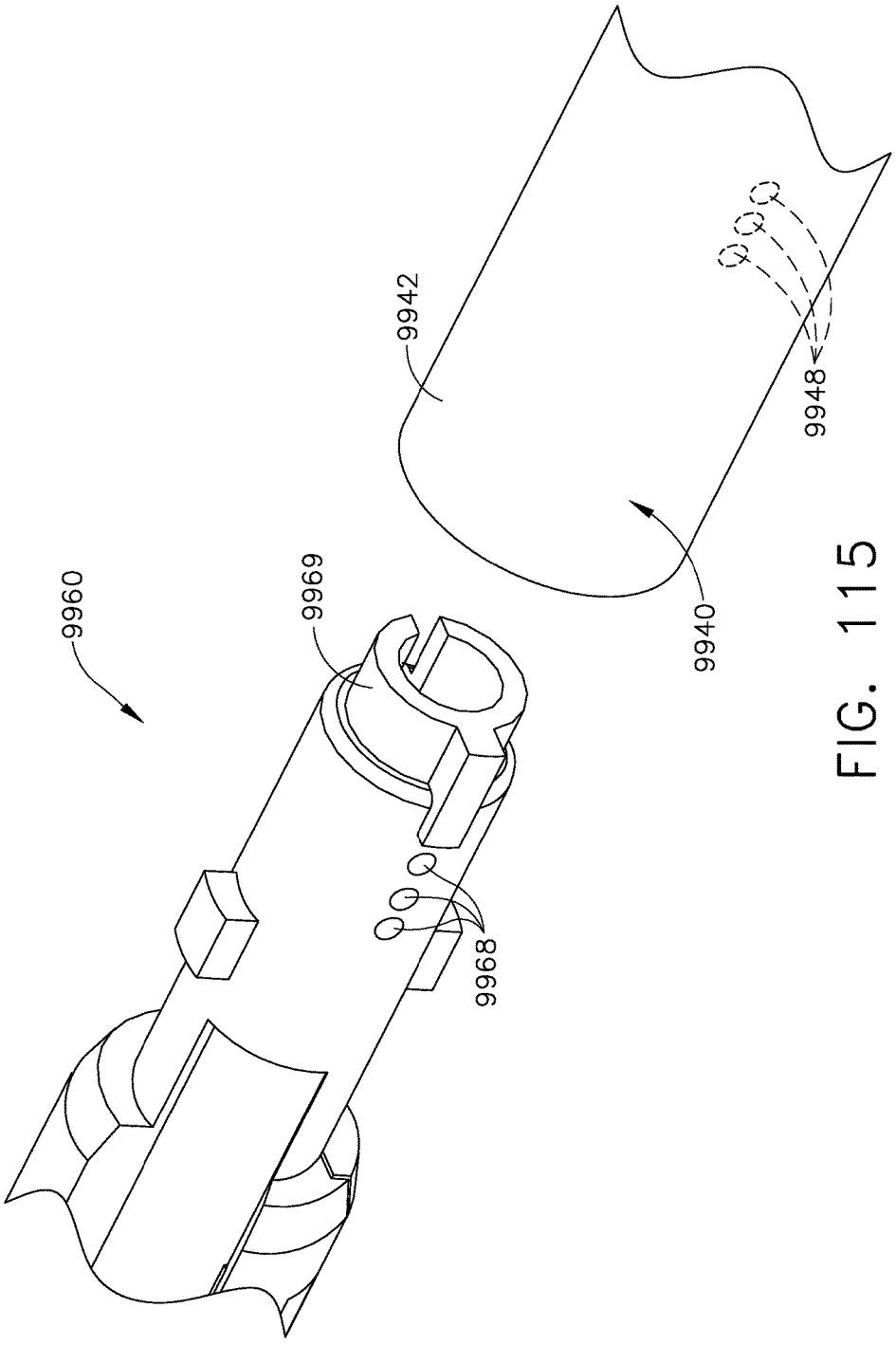

FIG. 115

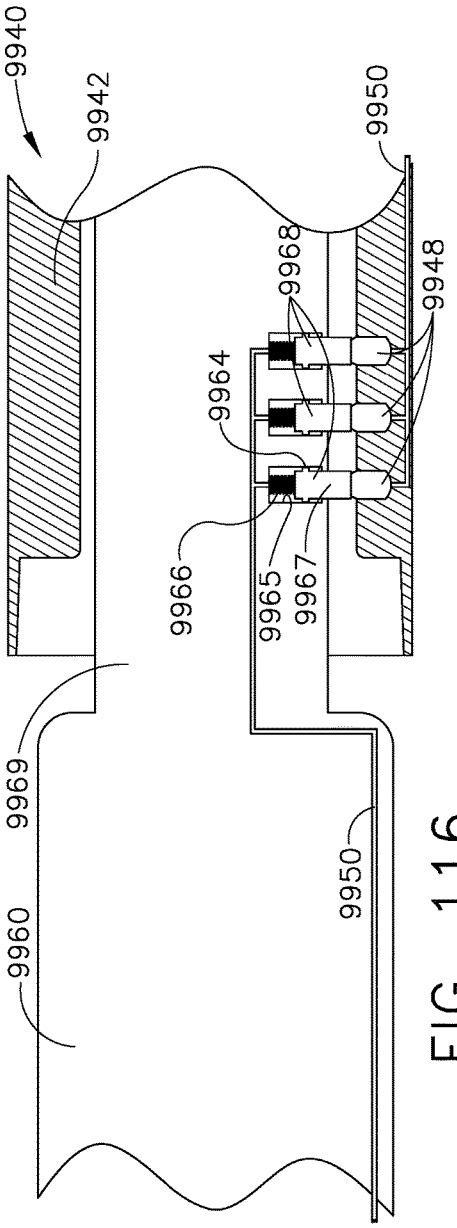

FIG. 116

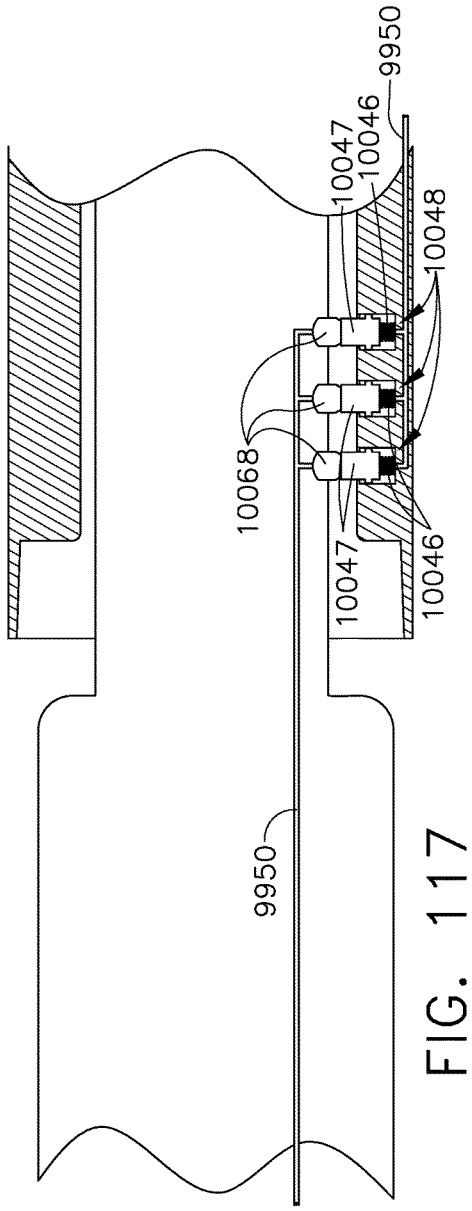

FIG. 117

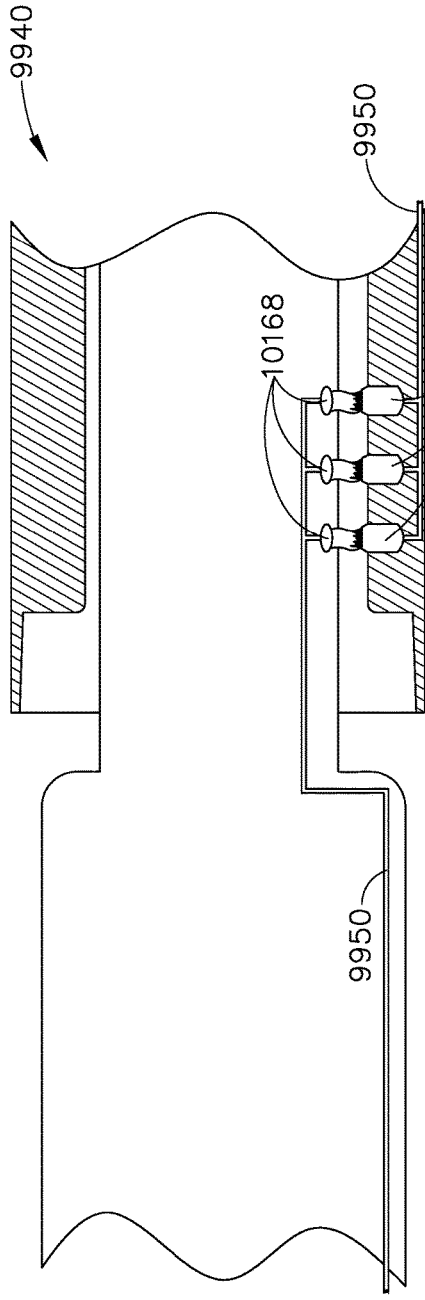

FIG. 118

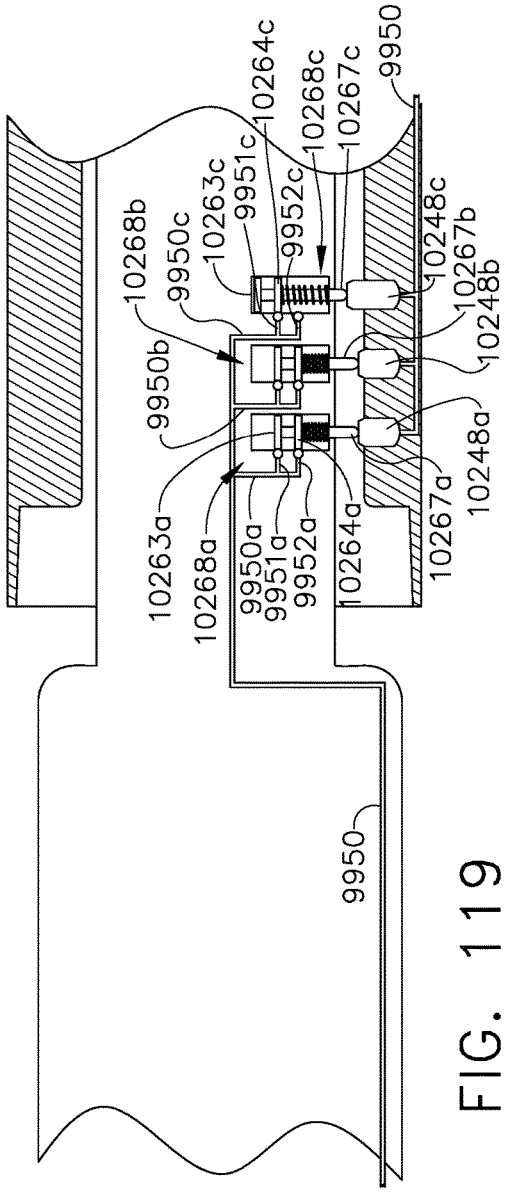

FIG. 119

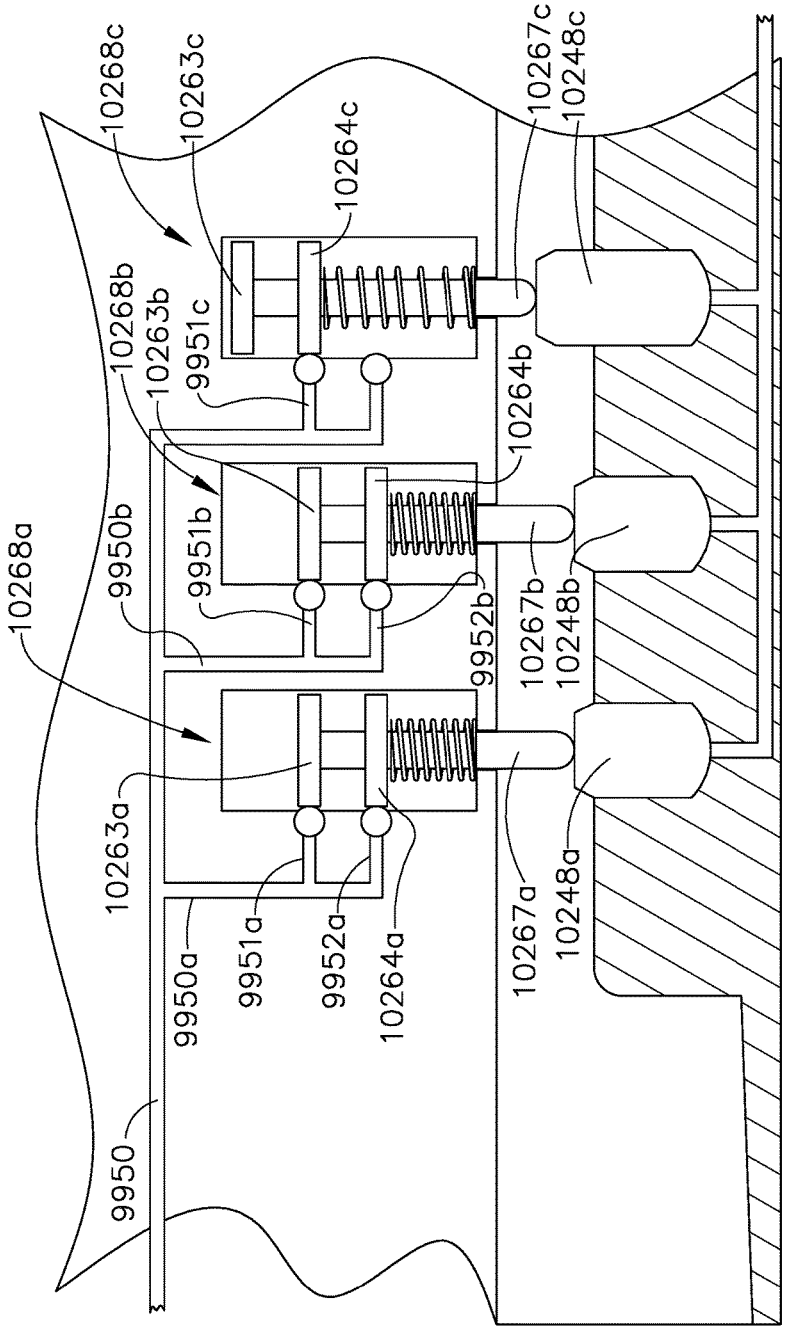
10268c
10263c
10264c
10267c
10248c
10268b
10263b
9951c
10264b
10268a
9950b
9951b
9952b
10267b
10248b
10263a
9951a
9952a
10264a
10267a
10248a
9950a
9950

FIG. 120

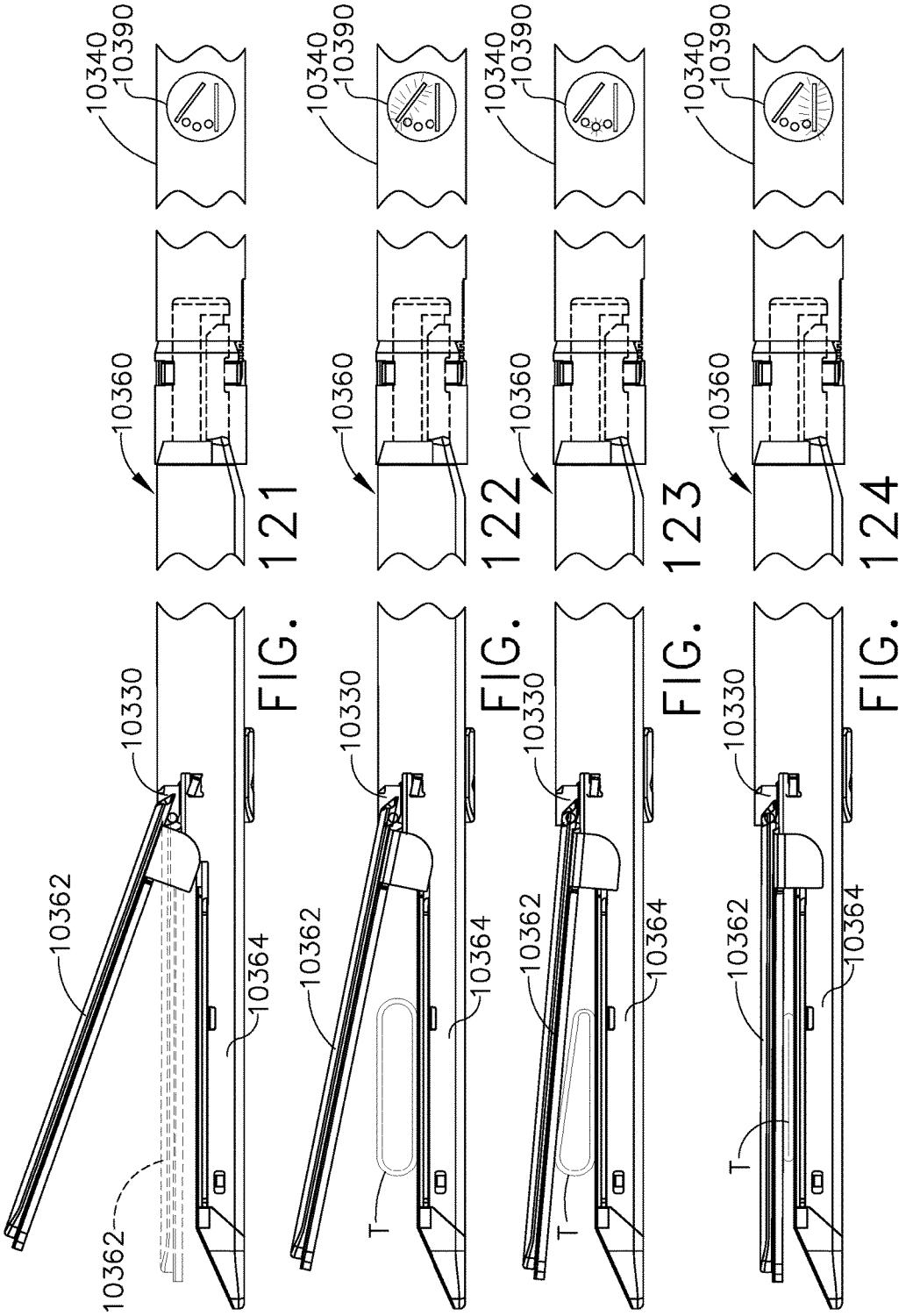

FIG. 121

FIG. 122

FIG. 123

FIG. 124

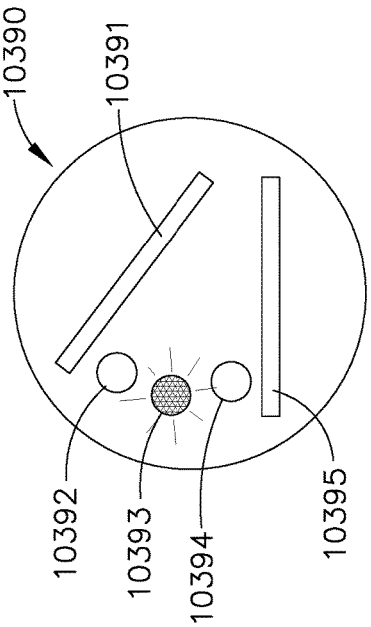

FIG. 127

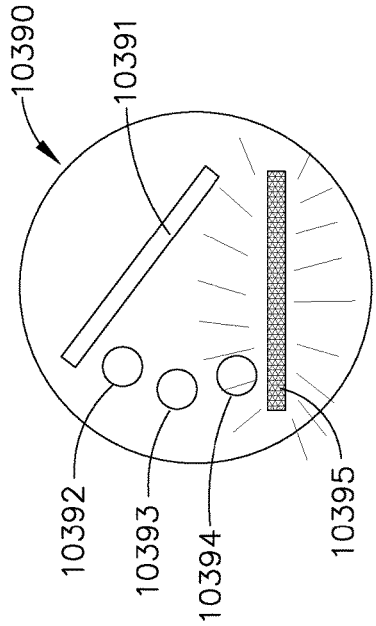

FIG. 128

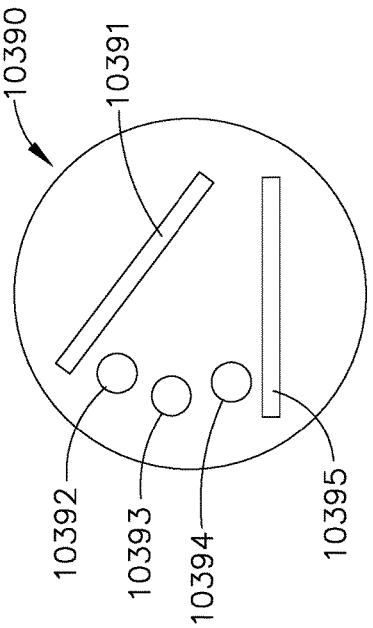

FIG. 125

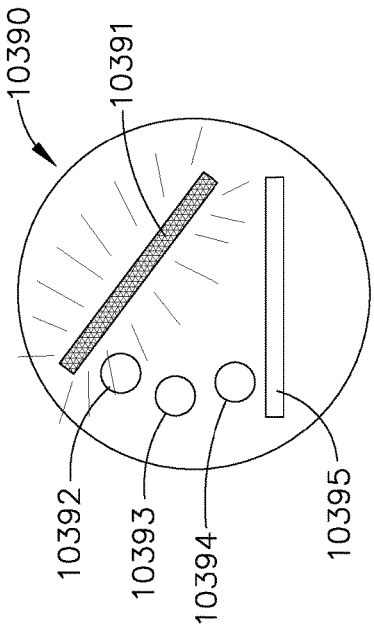

FIG. 126

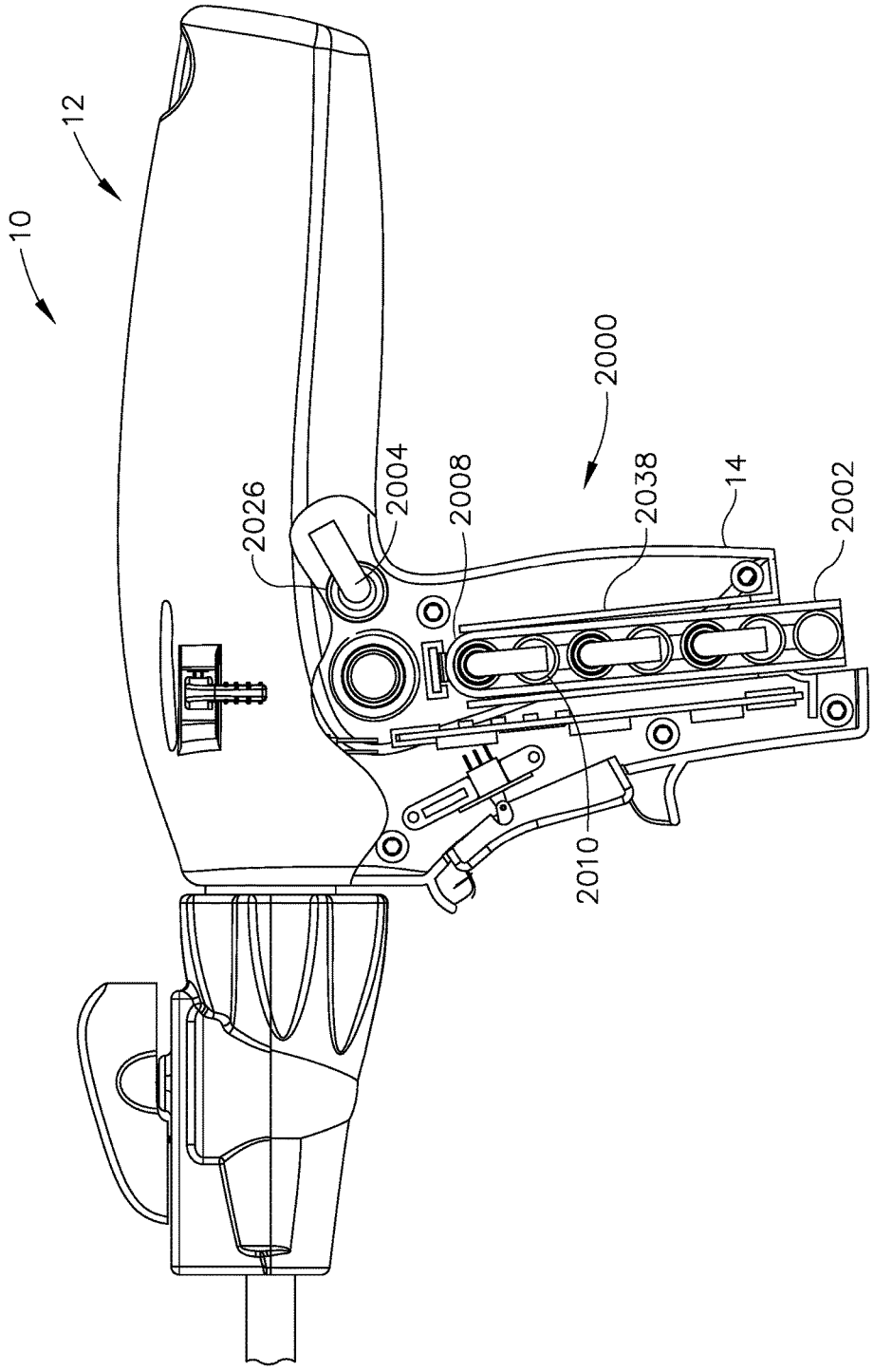

FIG. 129

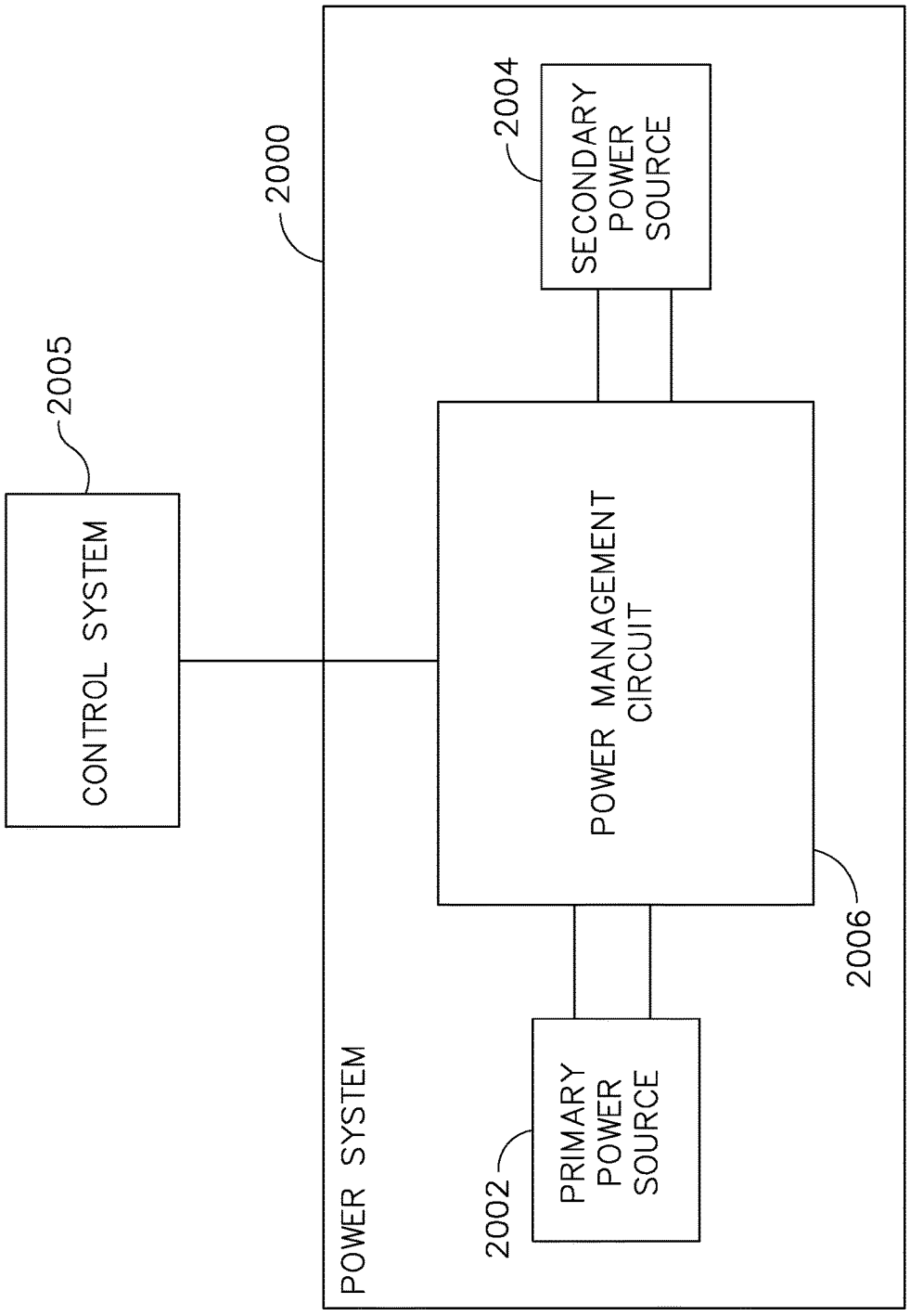
2000
2004
SECONDARY POWER SOURCE
2005
CONTROL SYSTEM
POWER MANAGEMENT CIRCUIT
2006
POWER SYSTEM
2002
PRIMARY POWER SOURCE

FIG. 130

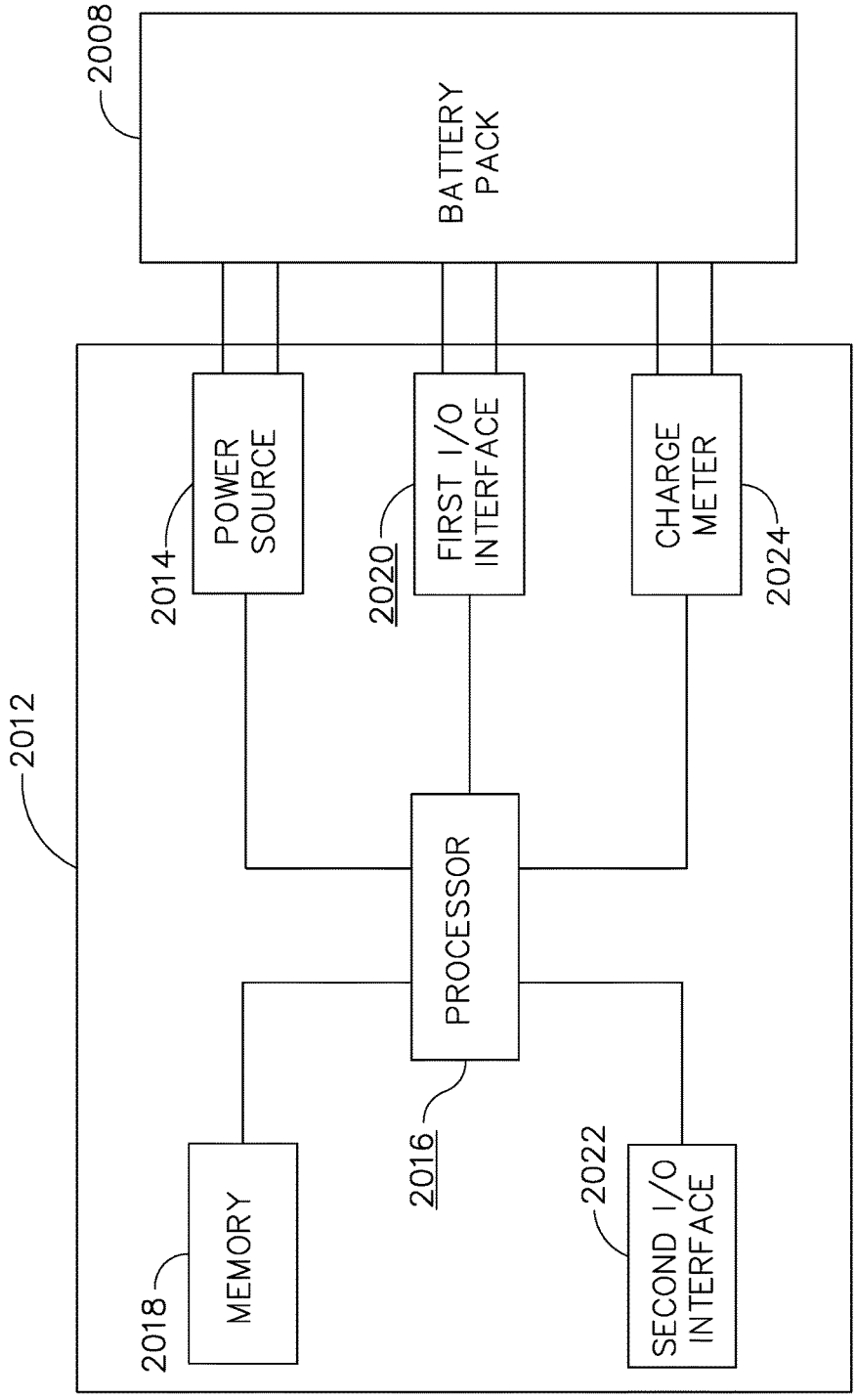
2008
BATTERY PACK
2012
POWER SOURCE
2014
FIRST I/O INTERFACE
2020
CHARGE METER
2024
PROCESSOR
2016
MEMORY
2018
SECOND I/O INTERFACE
2022

FIG. 131

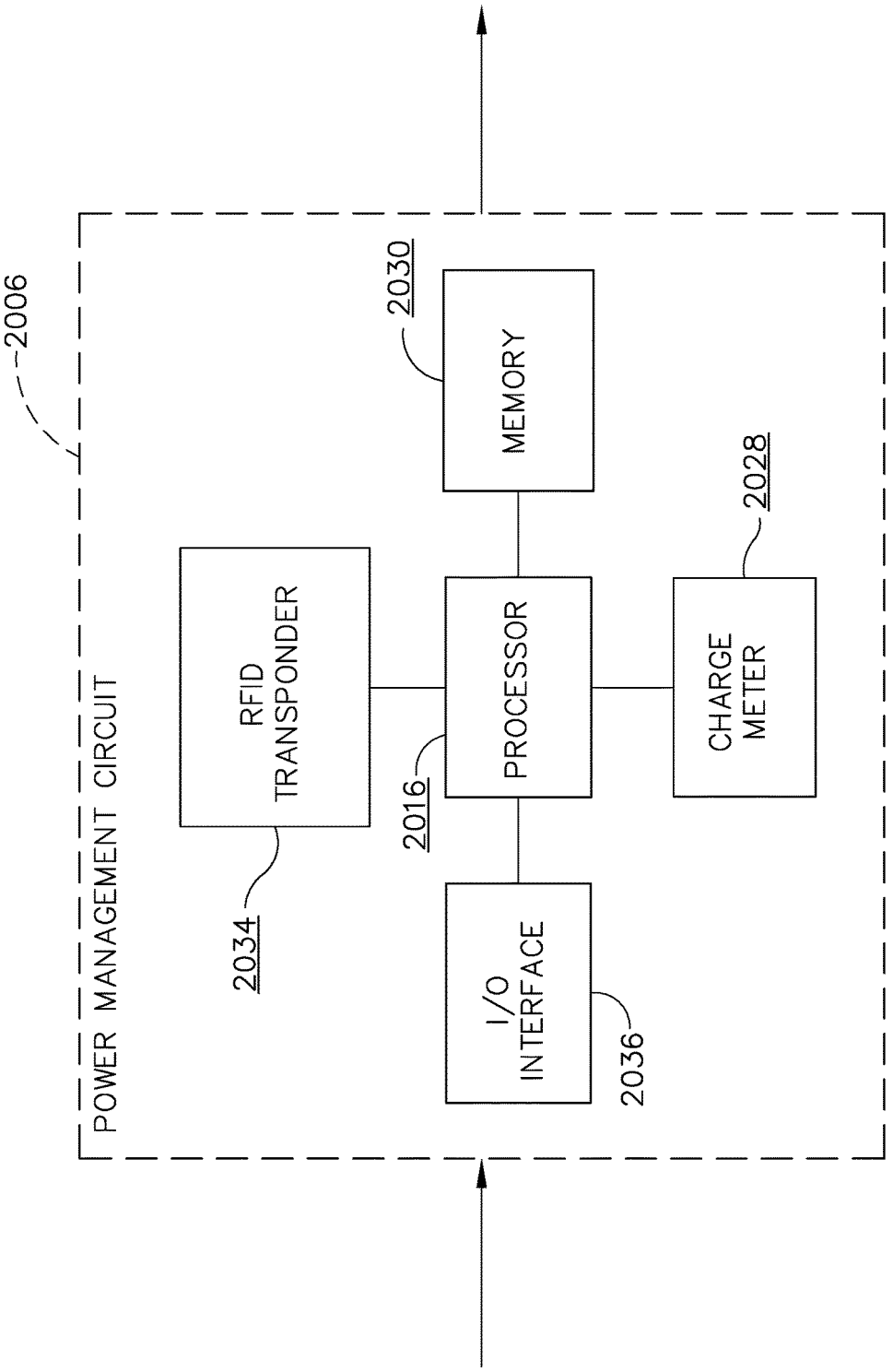
2006
POWER MANAGEMENT CIRCUIT
2030
MEMORY
2028
RFID TRANSPONDER
PROCESSOR
CHARGE METER
2016
2034
I/O INTERFACE
2036

FIG. 132

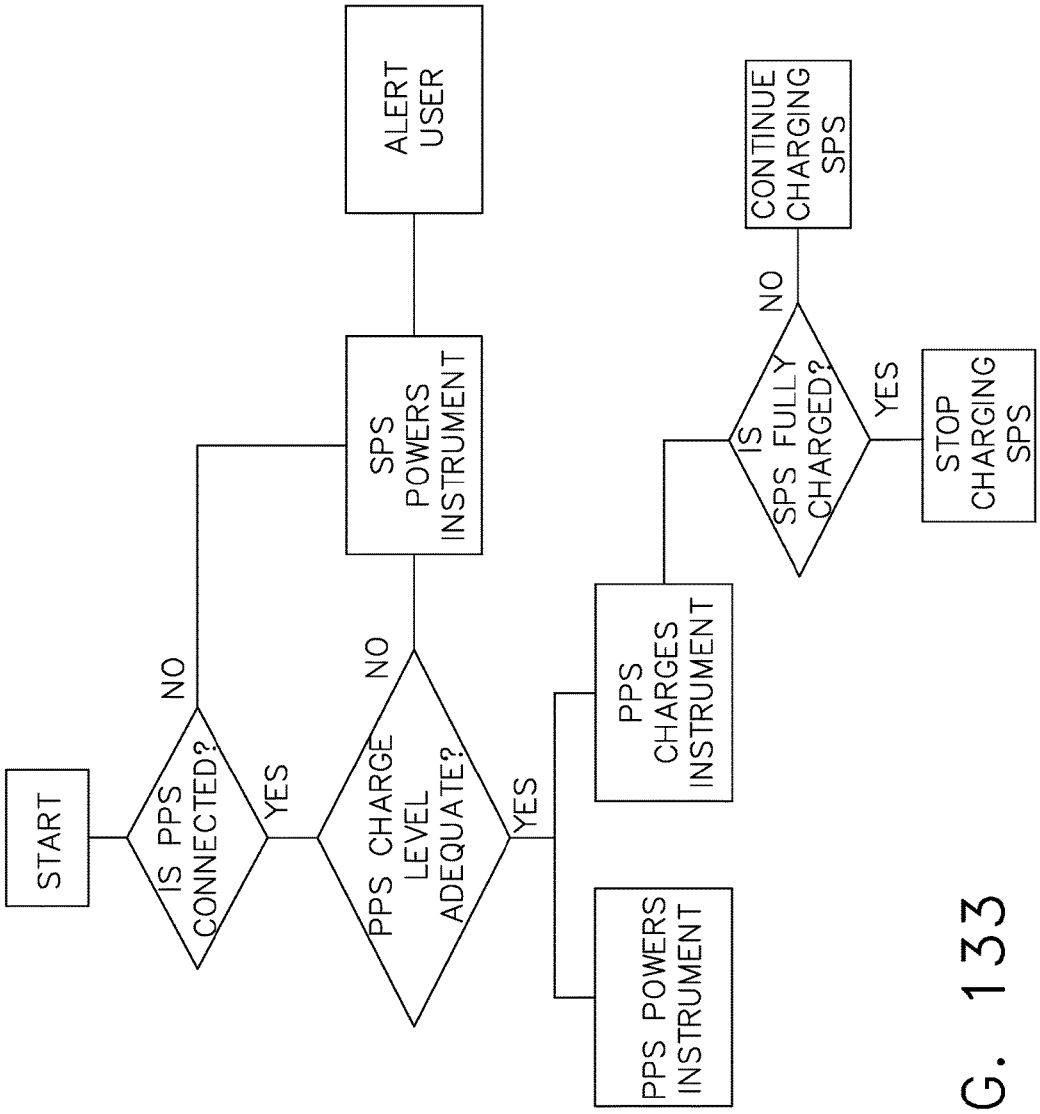
START
IS PPS CONNECTED?
NO
YES
ALERT USER
SPS POWERS INSTRUMENT
PPS CHARGE LEVEL ADEQUATE?
NO
YES
PPS CHARGES INSTRUMENT
PPS POWERS INSTRUMENT
IS SPS FULLY CHARGED?
NO
YES
CONTINUE CHARGING SPS
STOP CHARGING SPS

FIG. 133

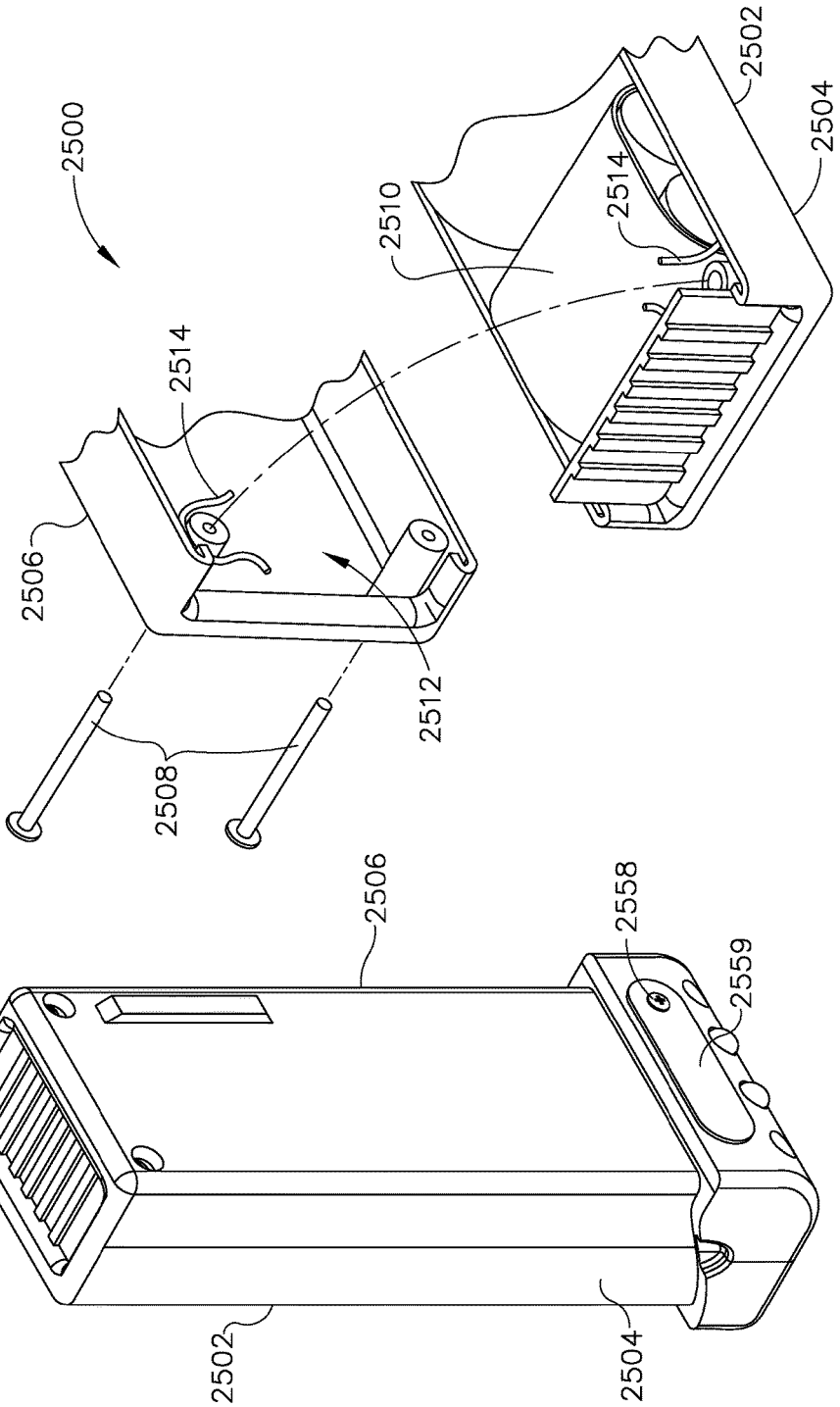

FIG. 134

FIG. 135

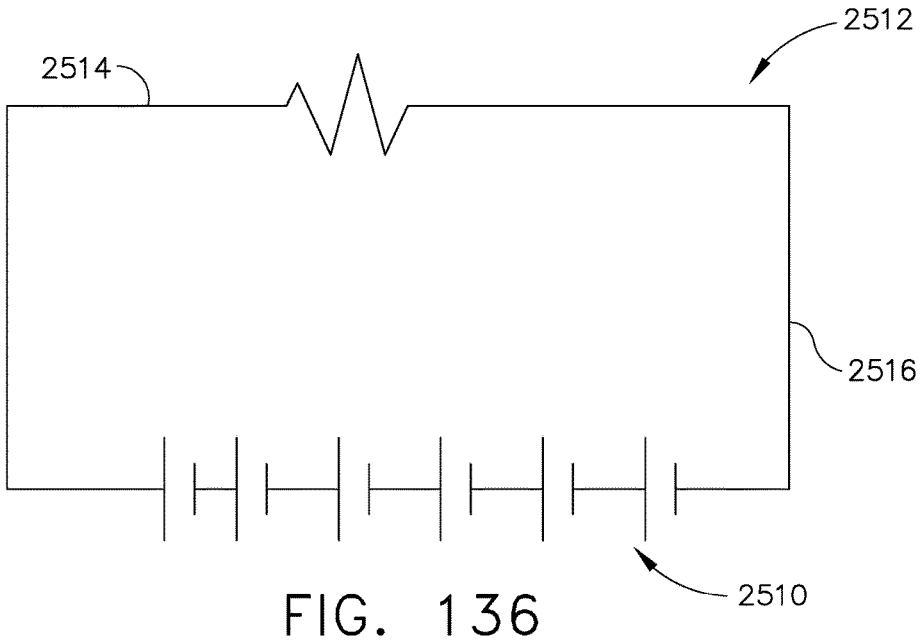

FIG. 136

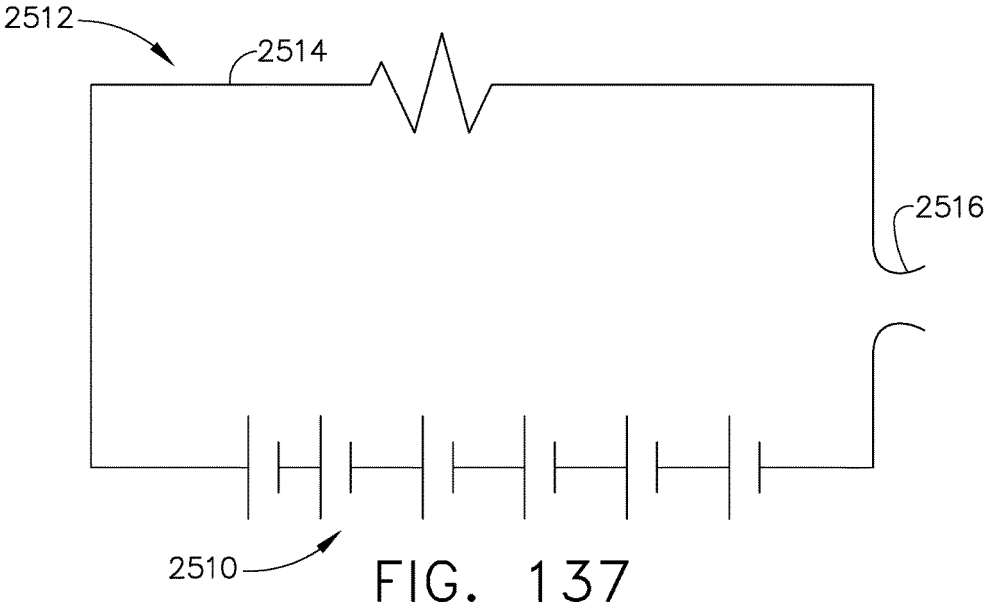

FIG. 137

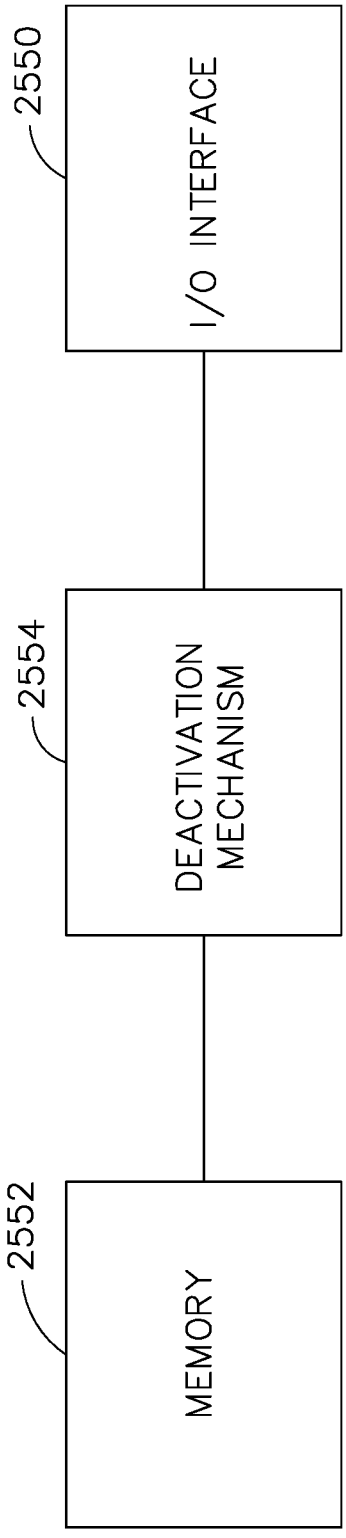
2550
I/O INTERFACE
2554
DEACTIVATION MECHANISM
2552
MEMORY

FIG. 138

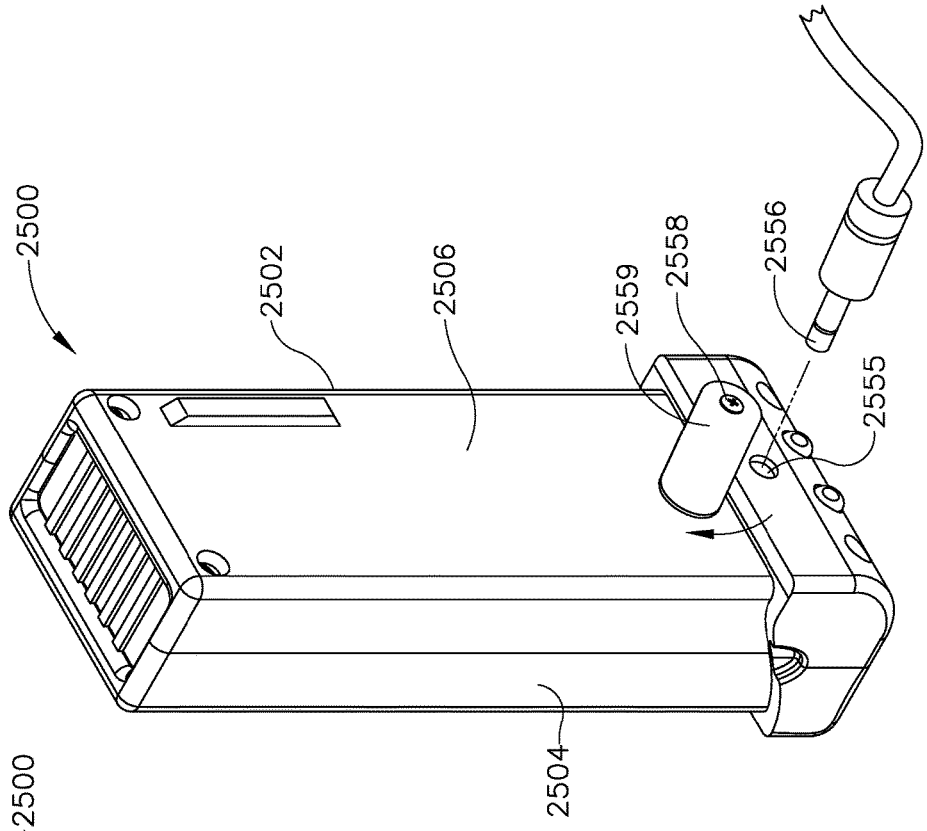

FIG. 140

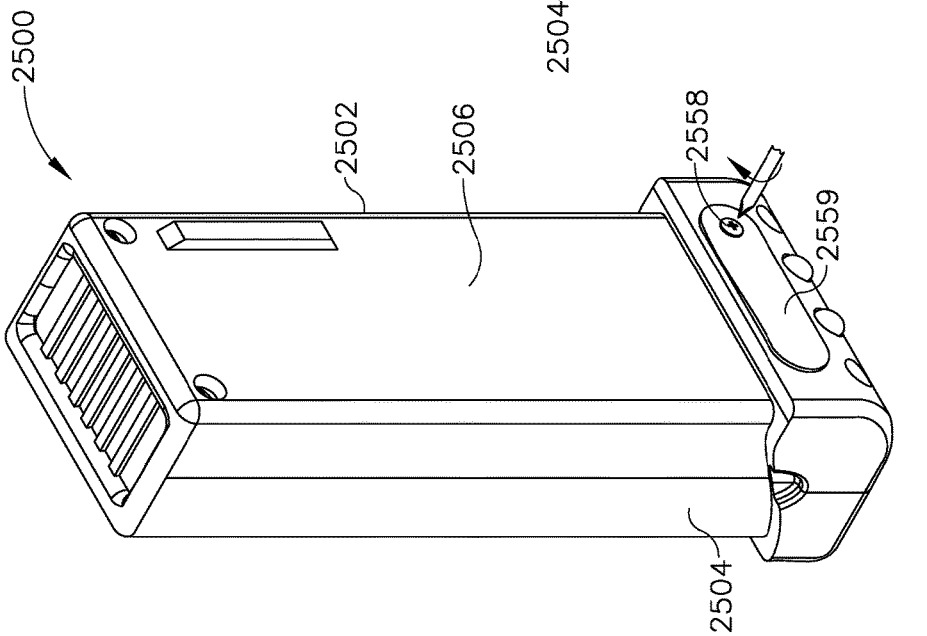

FIG. 139

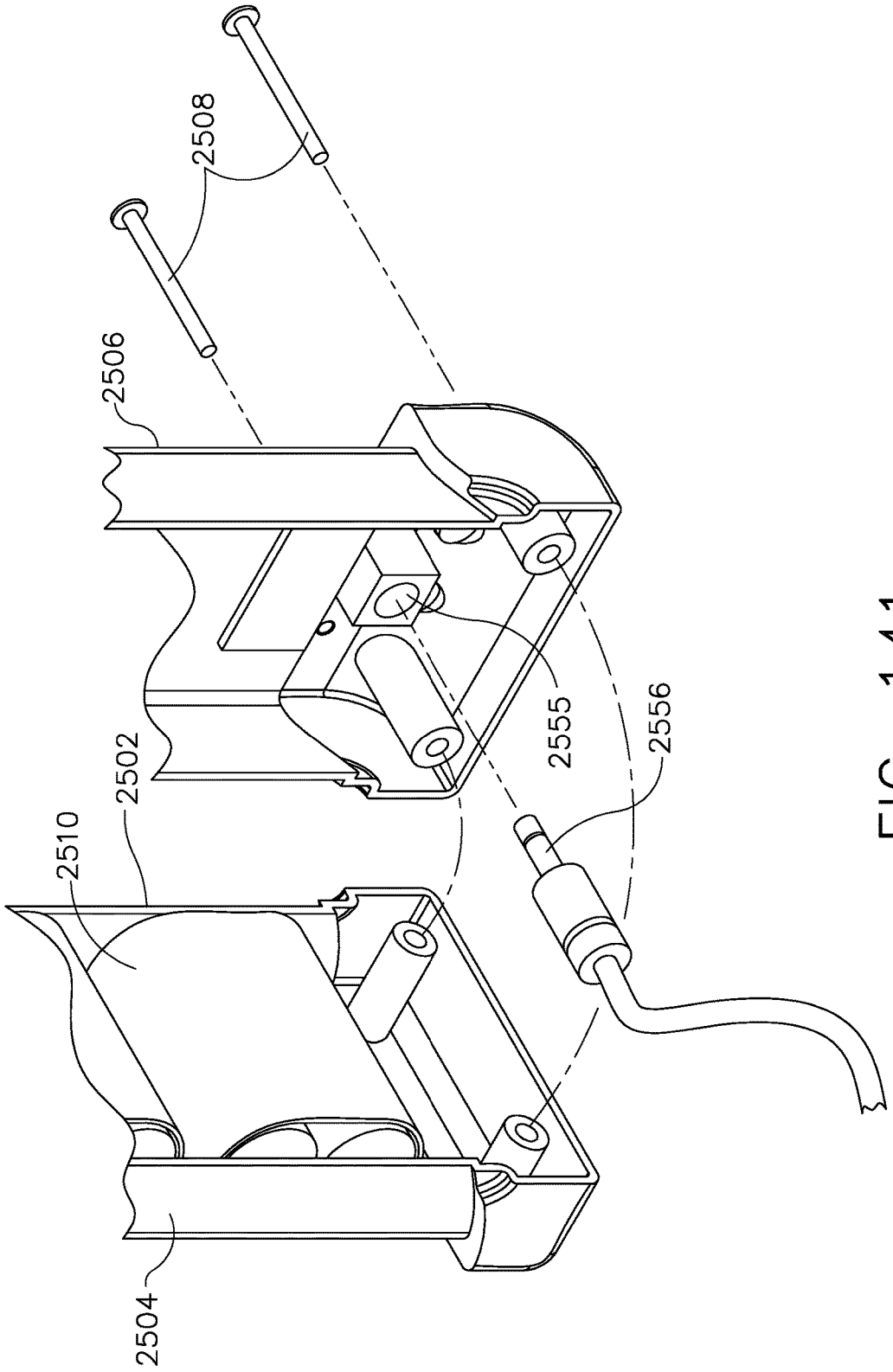

FIG. 141

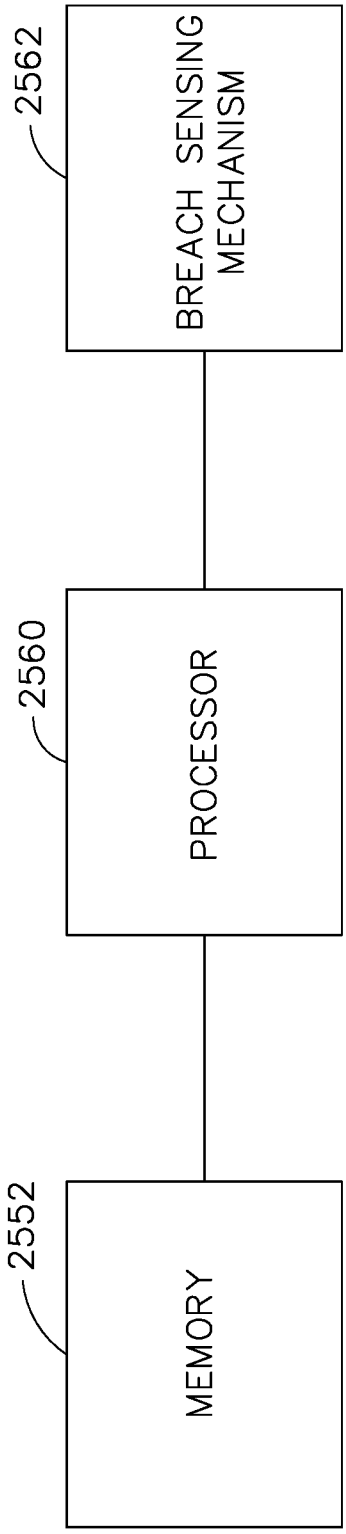

FIG. 142

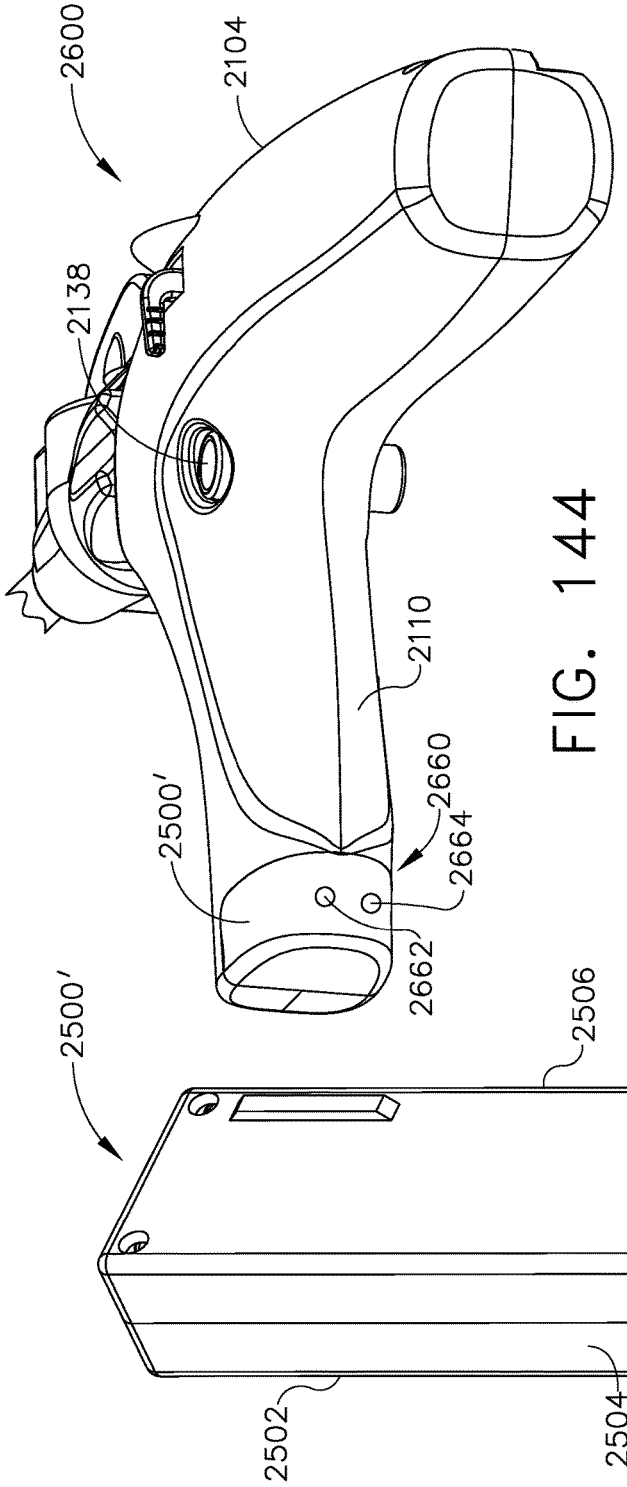

FIG. 144

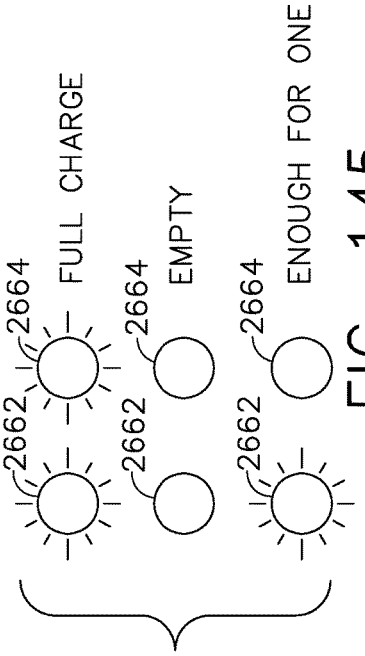

FIG. 145

FIG. 143

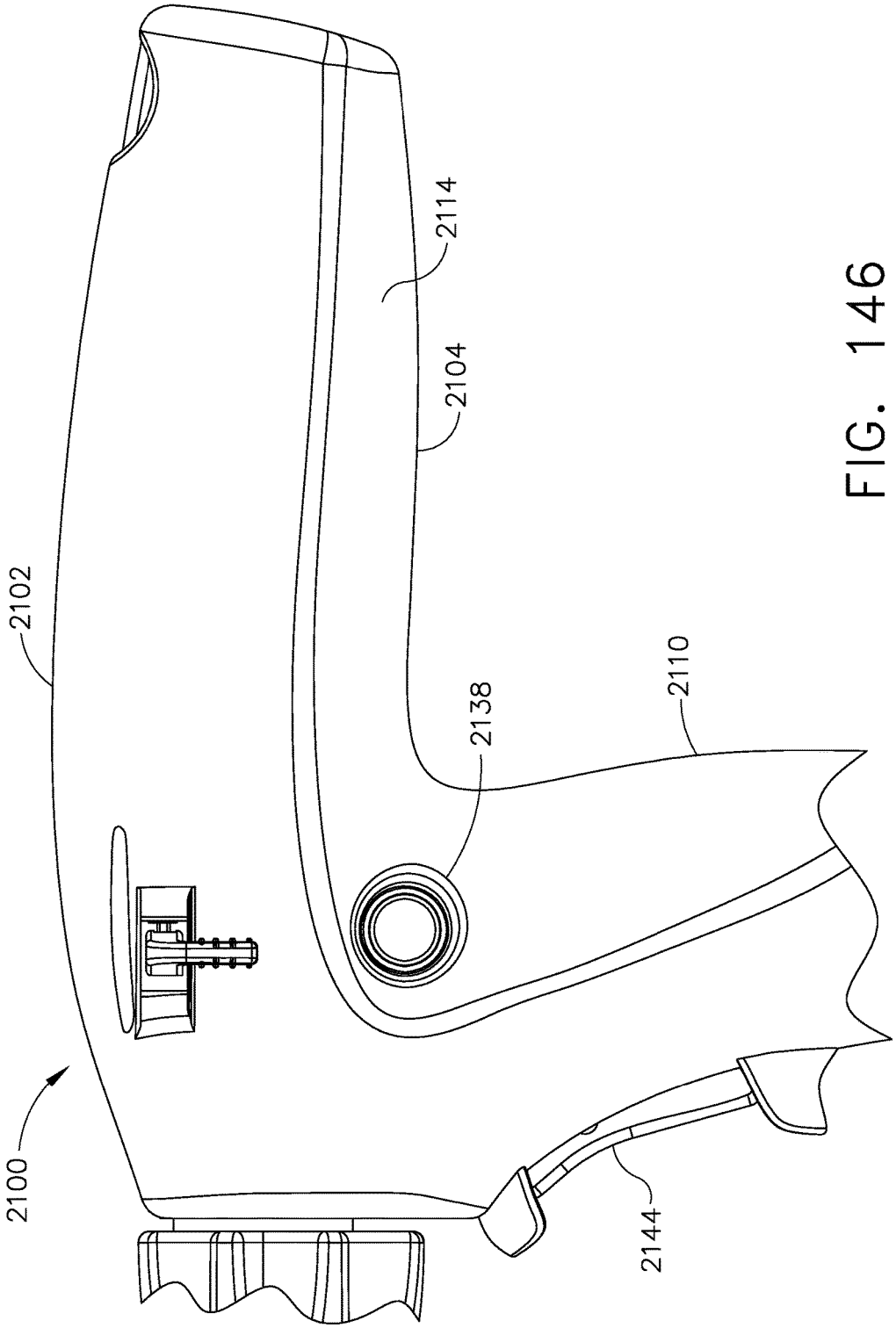

FIG. 146

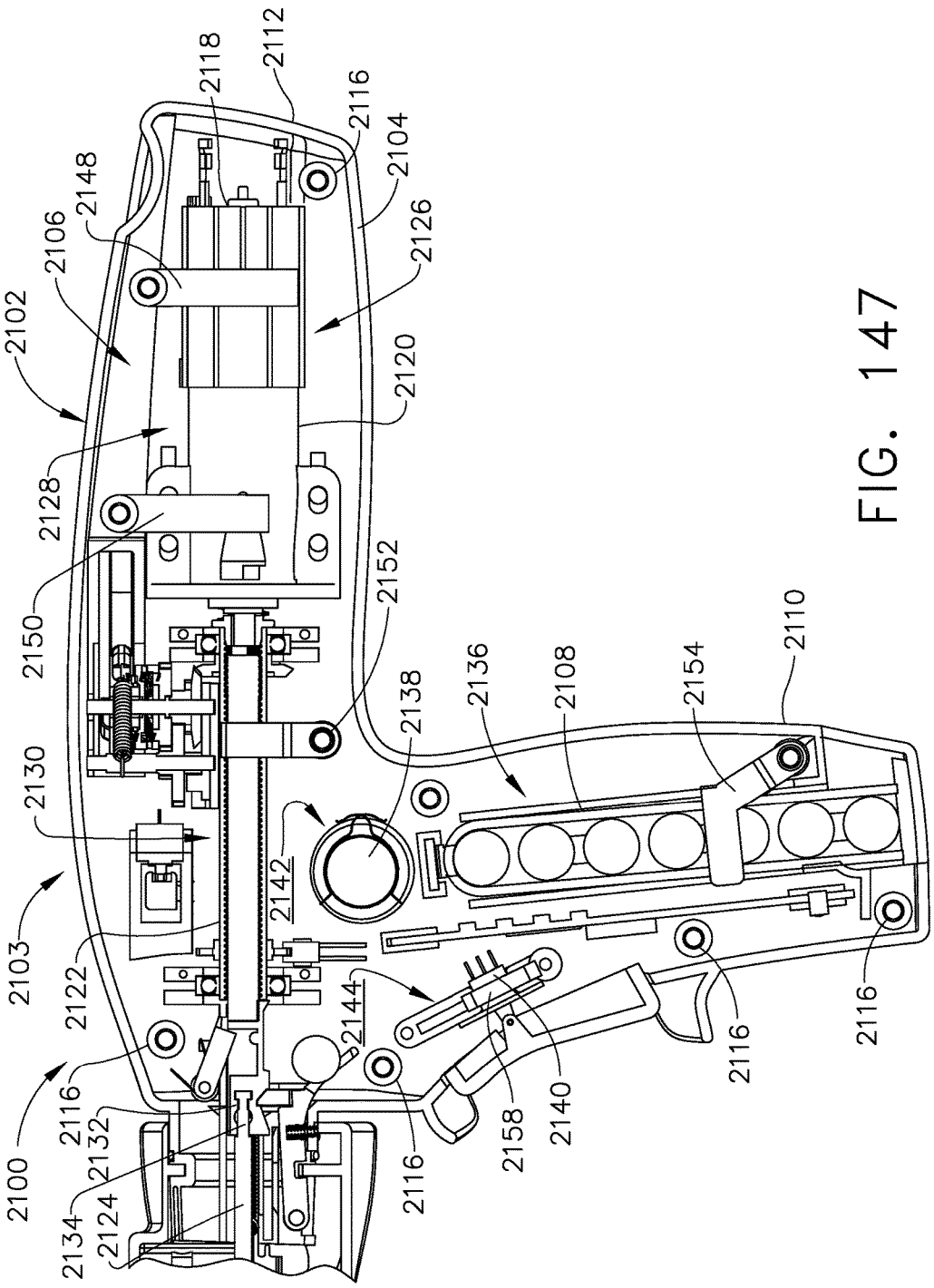
2100
2102
2103
2104
2106
2108
2110
2112
2116
2118
2120
2122
2124
2126
2128
2130
2132
2134
2136
2138
2140
2142
2144
2148
2150
2152
2154
2158

FIG. 147

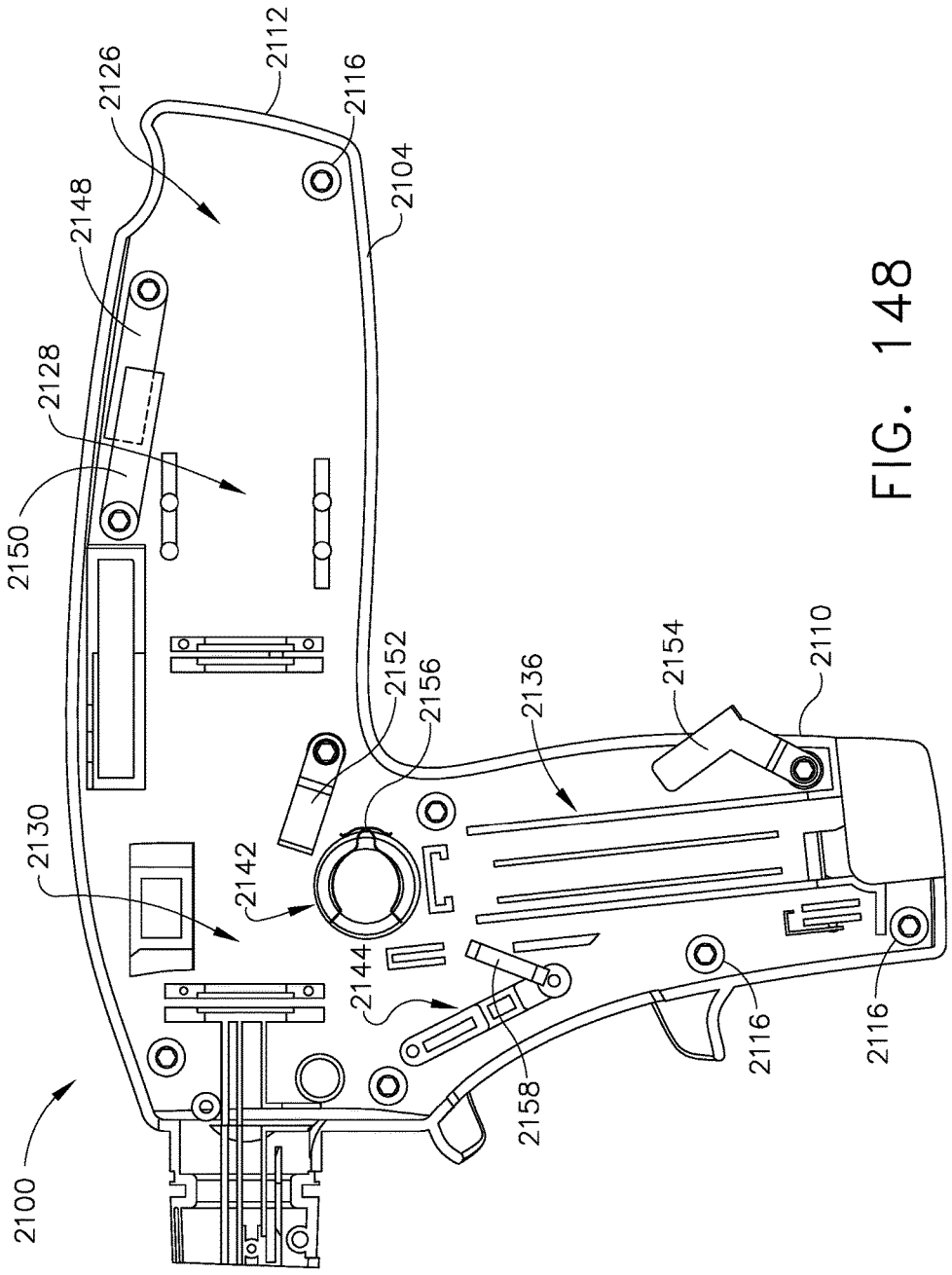
2100
2112
2126
2116
2104
2148
2128
2150
2152
2156
2136
2154
2110
2130
2142
2144
2158
2116
2116

FIG. 148

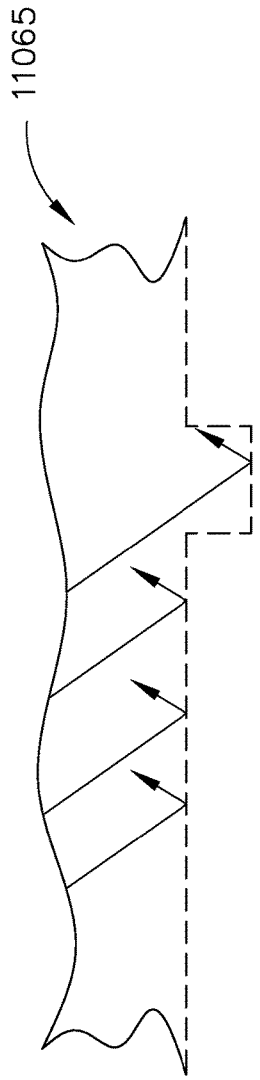

FIG. 149

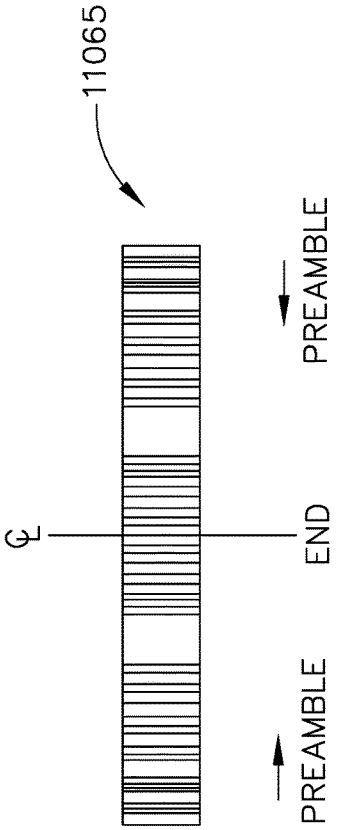

FIG. 150

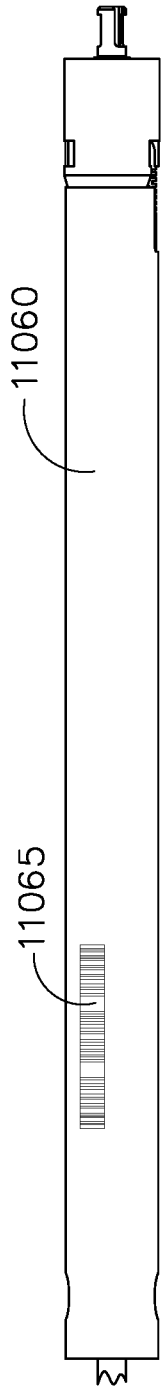

FIG. 151

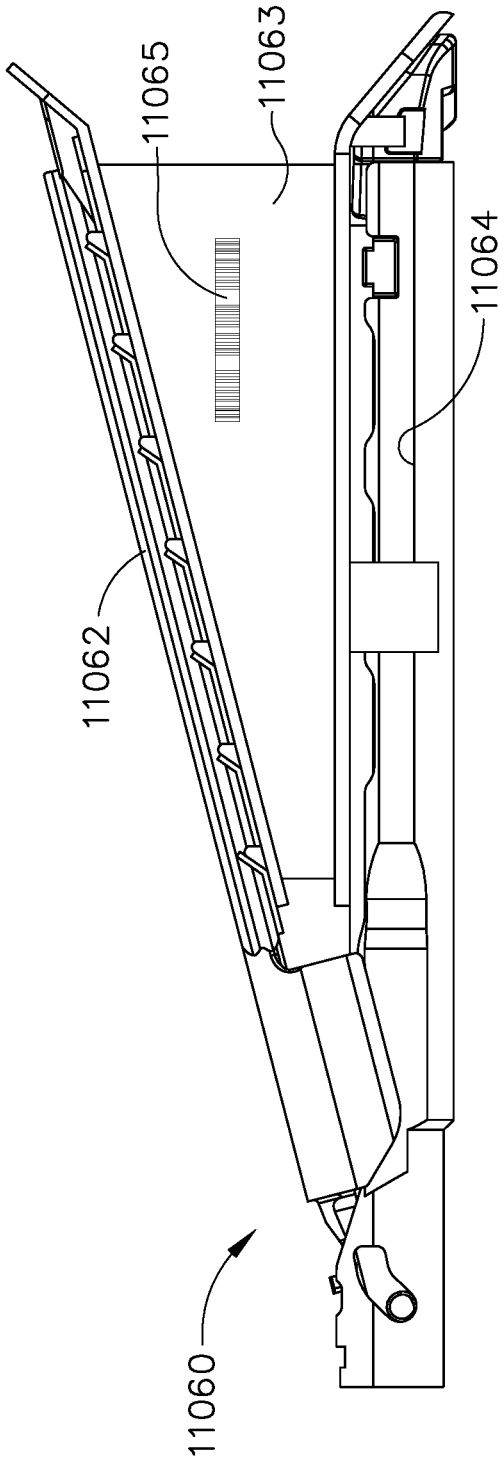

FIG. 152

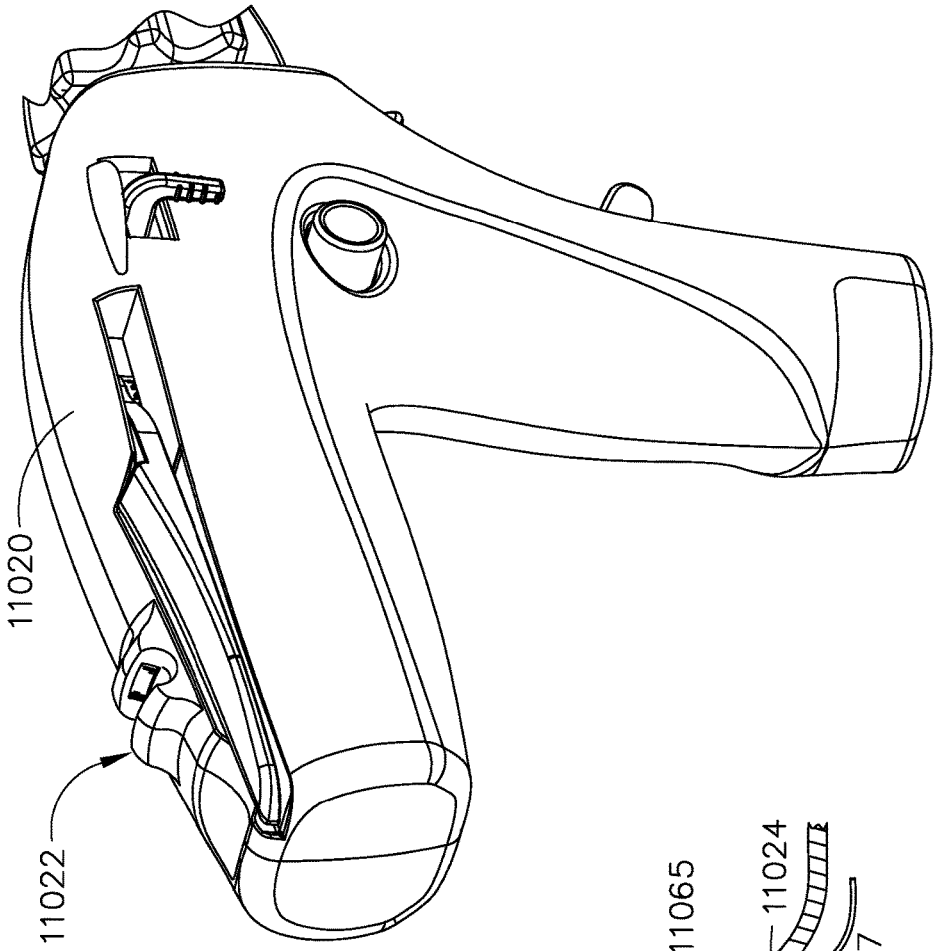

FIG. 153

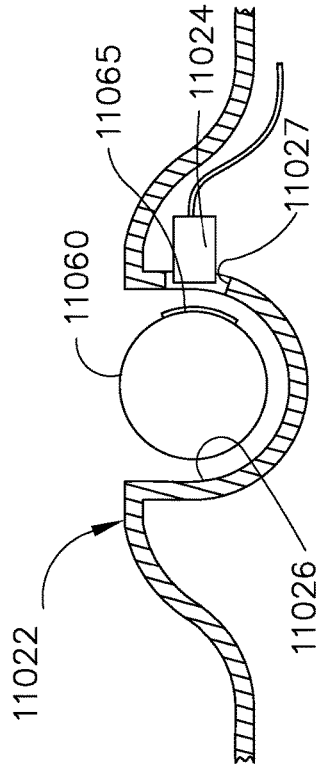

FIG. 154

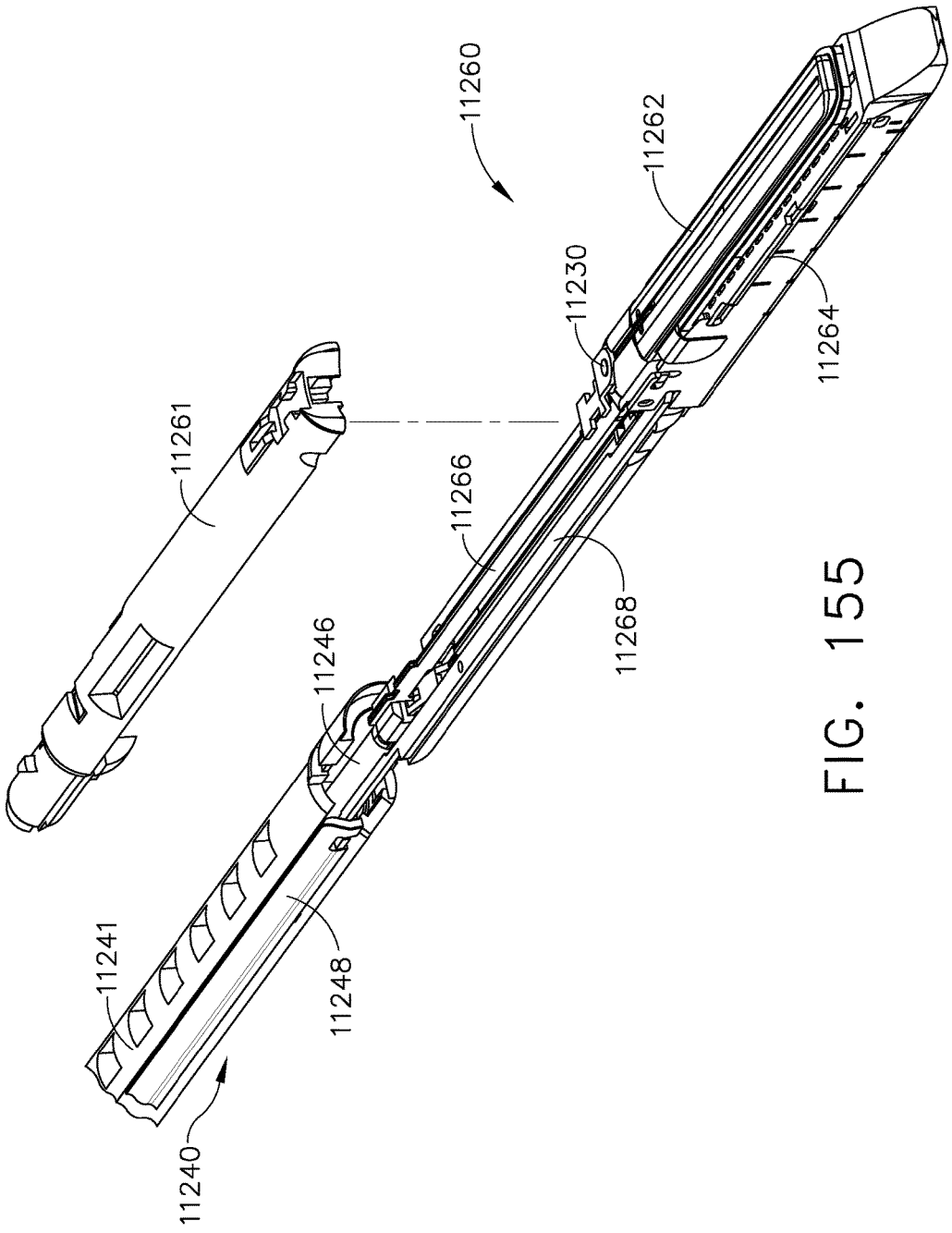
11260
11262
11230
11264
11261
11266
11268
11246
11241
11248
11240

FIG. 155

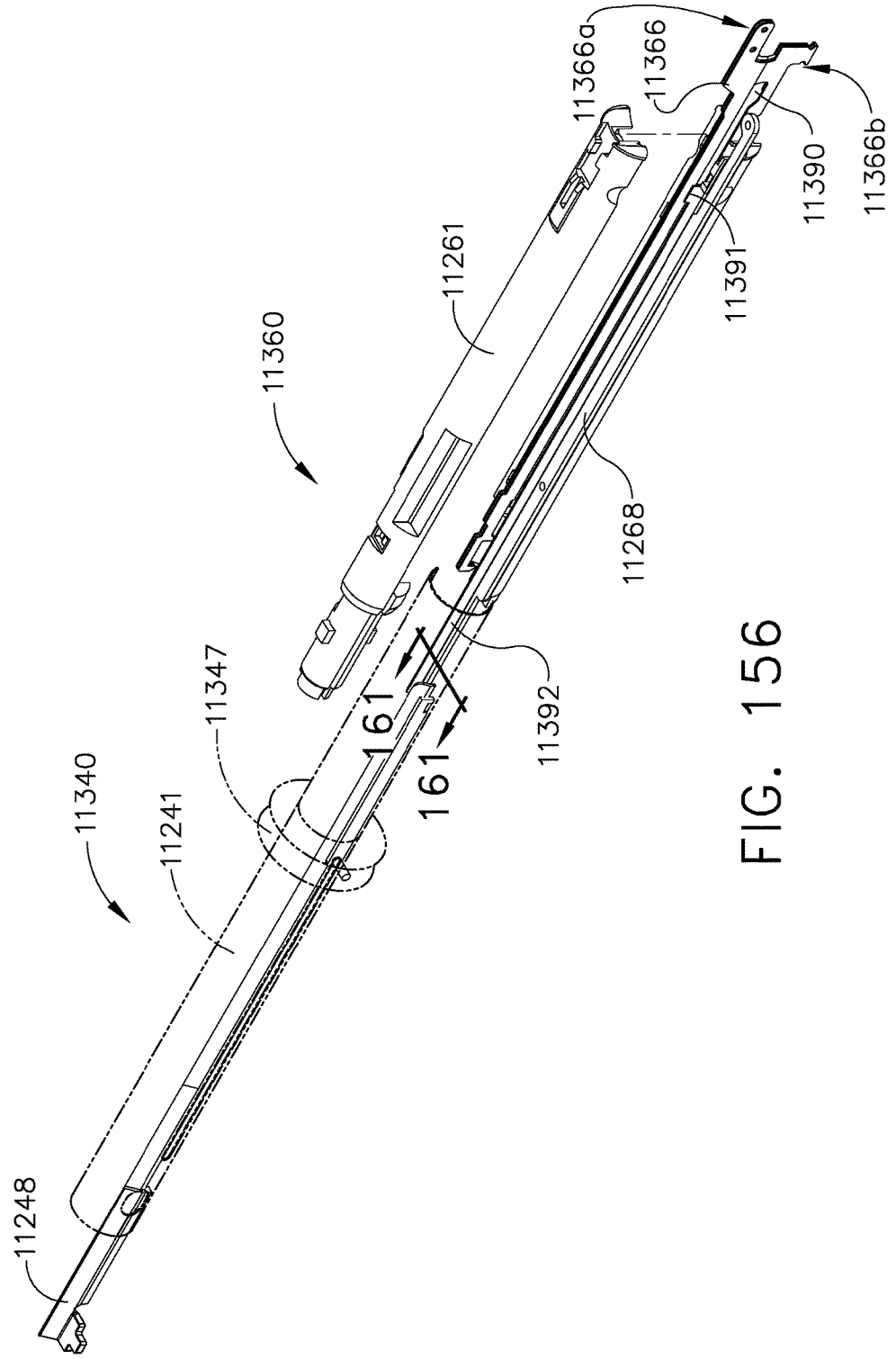
11366a
11366
11366b
11390
11391
11261
11360
11268
11392
161
161
11347
11340
11241
11248

FIG. 156

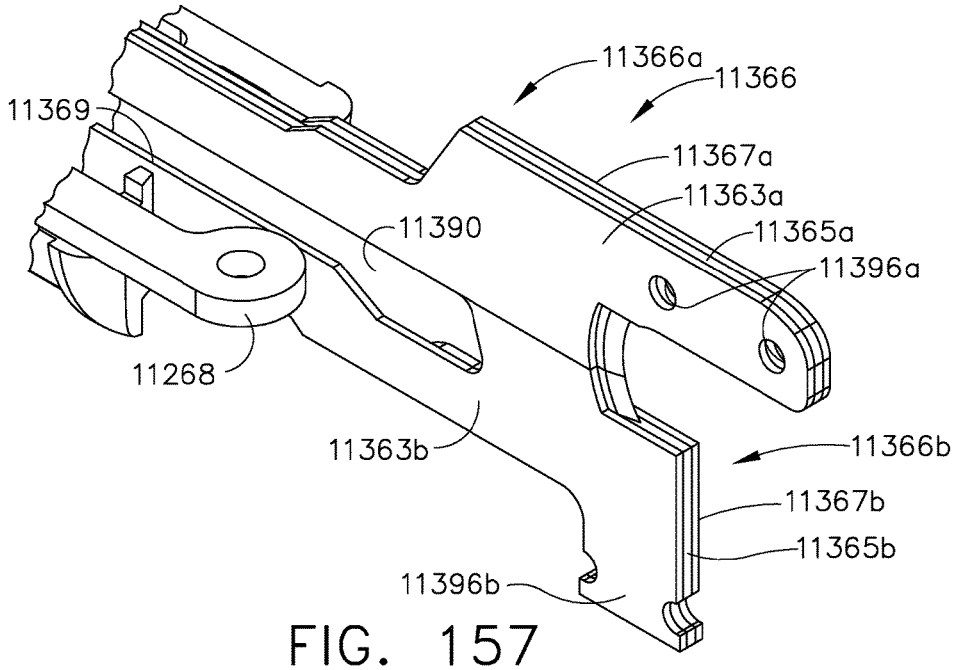

FIG. 157

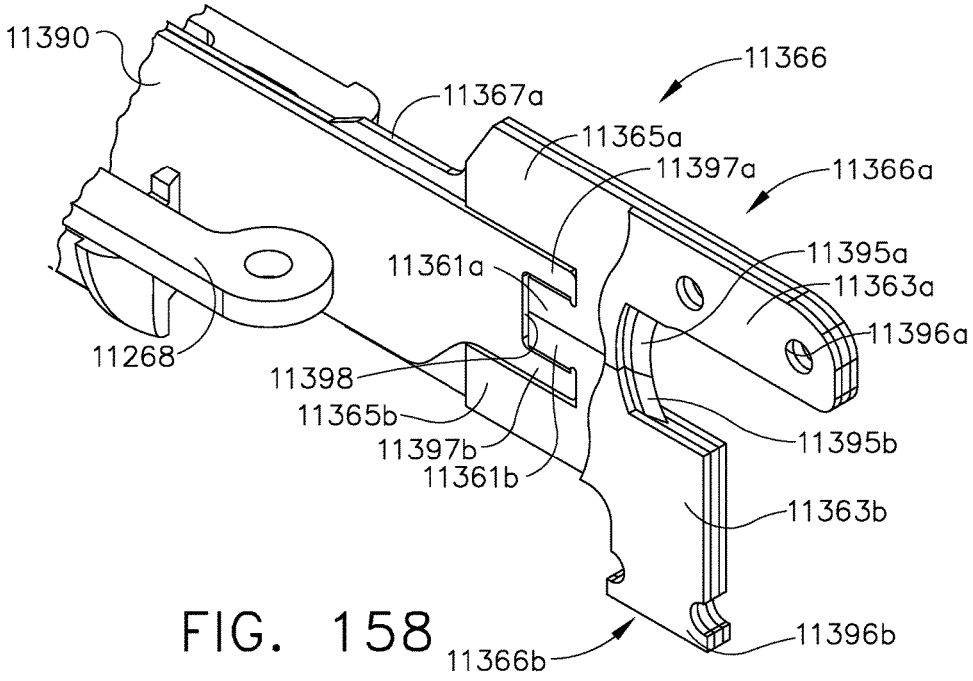

FIG. 158

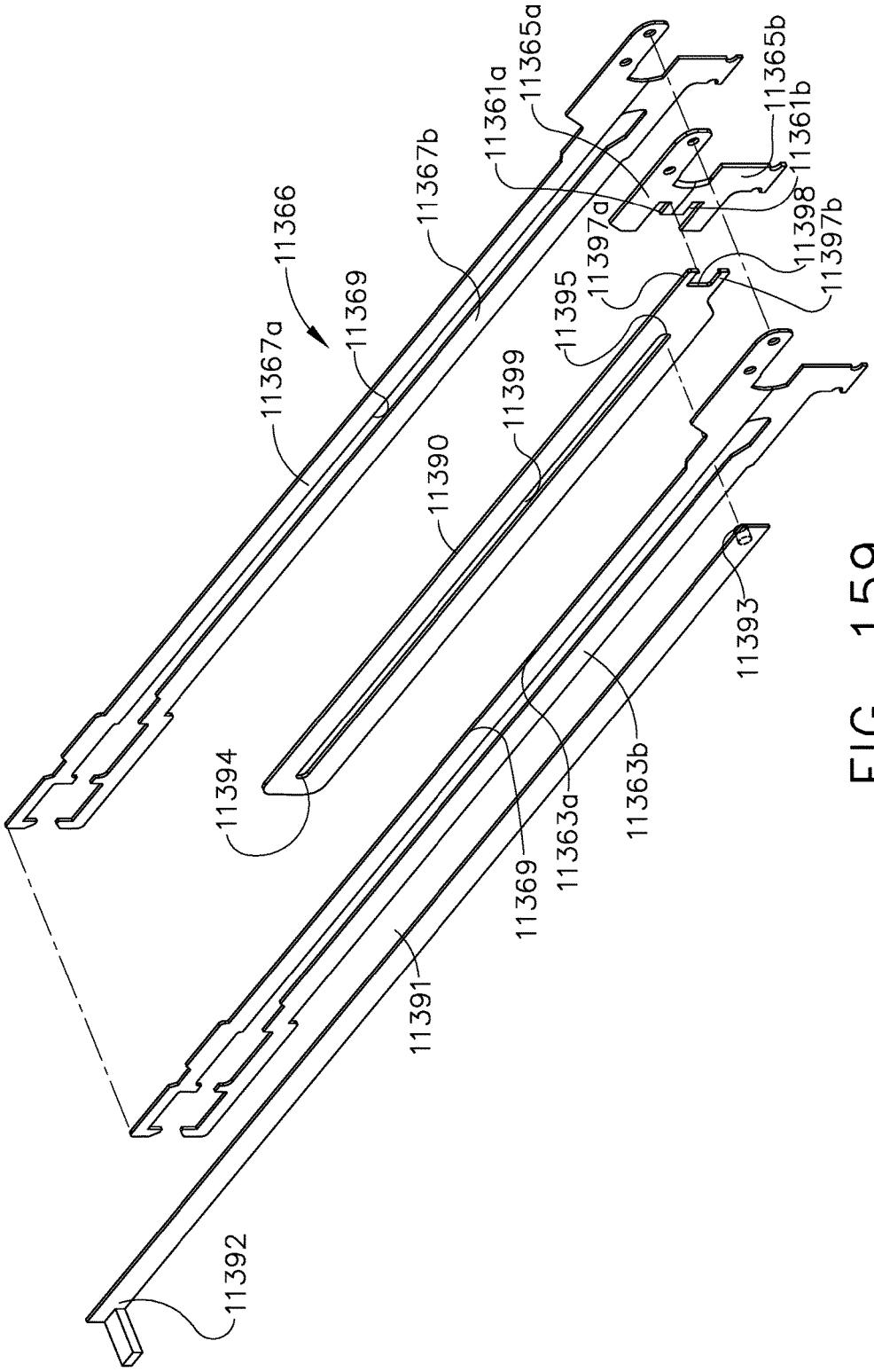
11365a
11361a
11365b
11361b
11367b
11366
11398
11397a
11397b
11369
11367a
11395
11399
11390
11394
11393
11363b
11363a
11369
11391
11392

FIG. 159

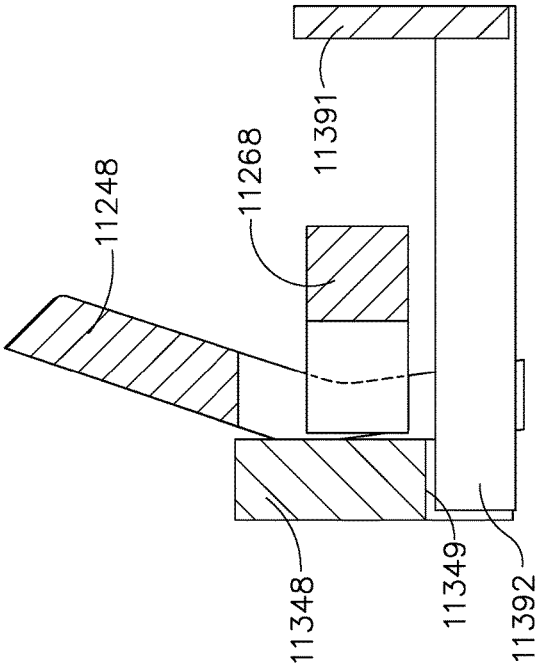

FIG. 161

FIG. 160

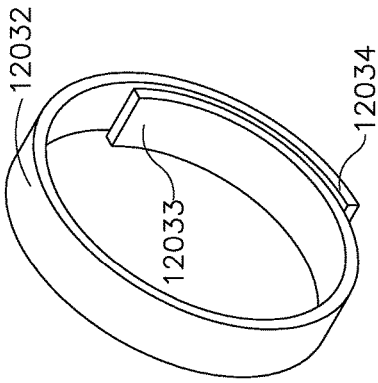

FIG. 164

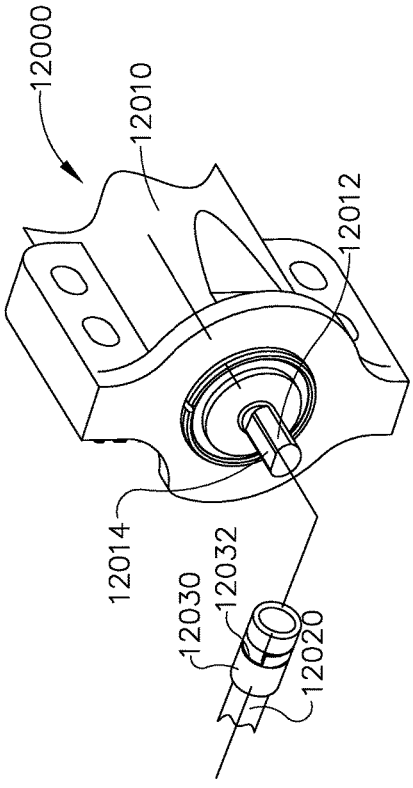

FIG. 162

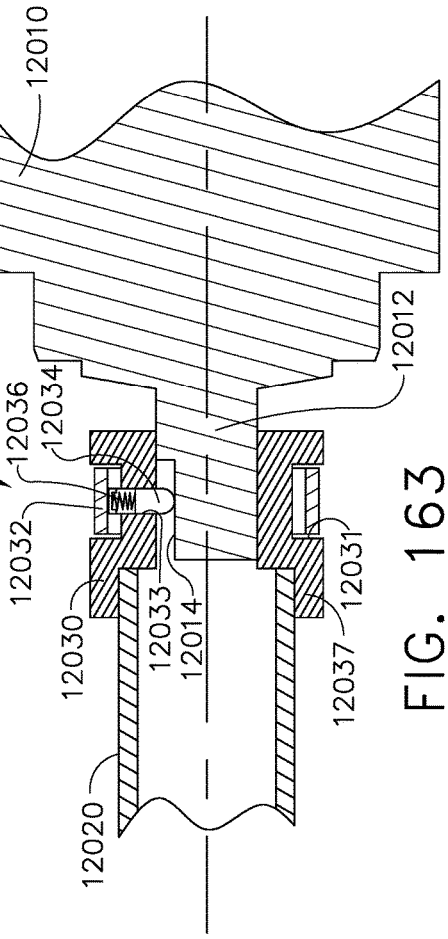

FIG. 163

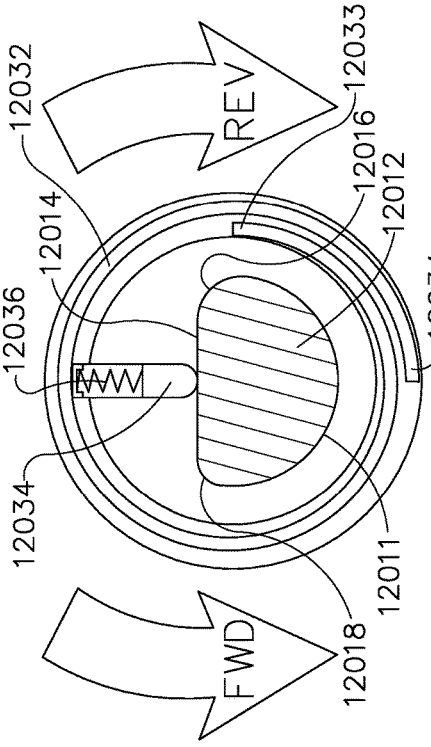

FIG. 165

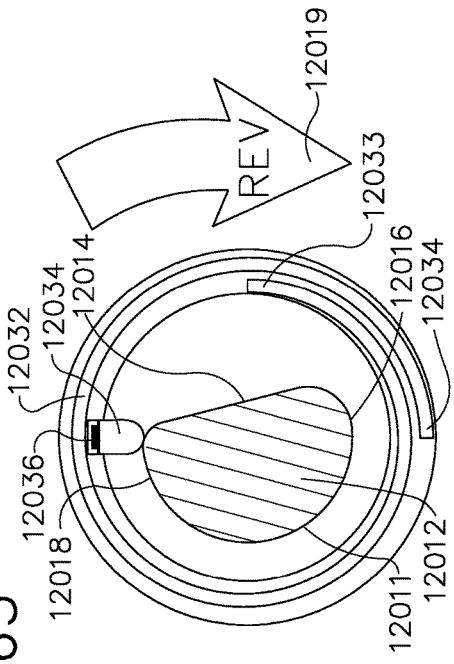

FIG. 167

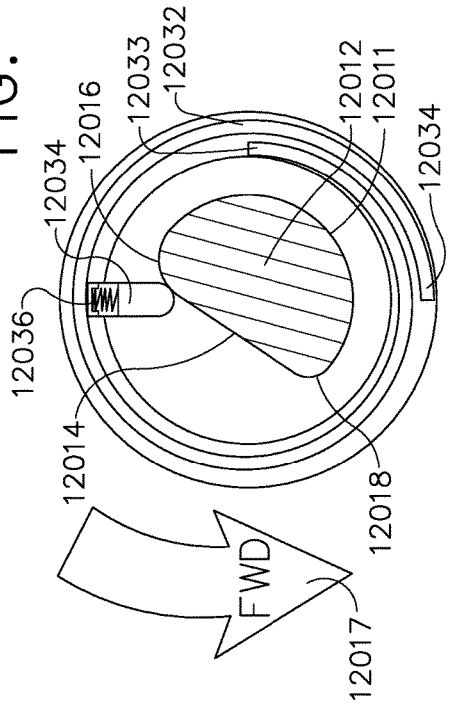

FIG. 166

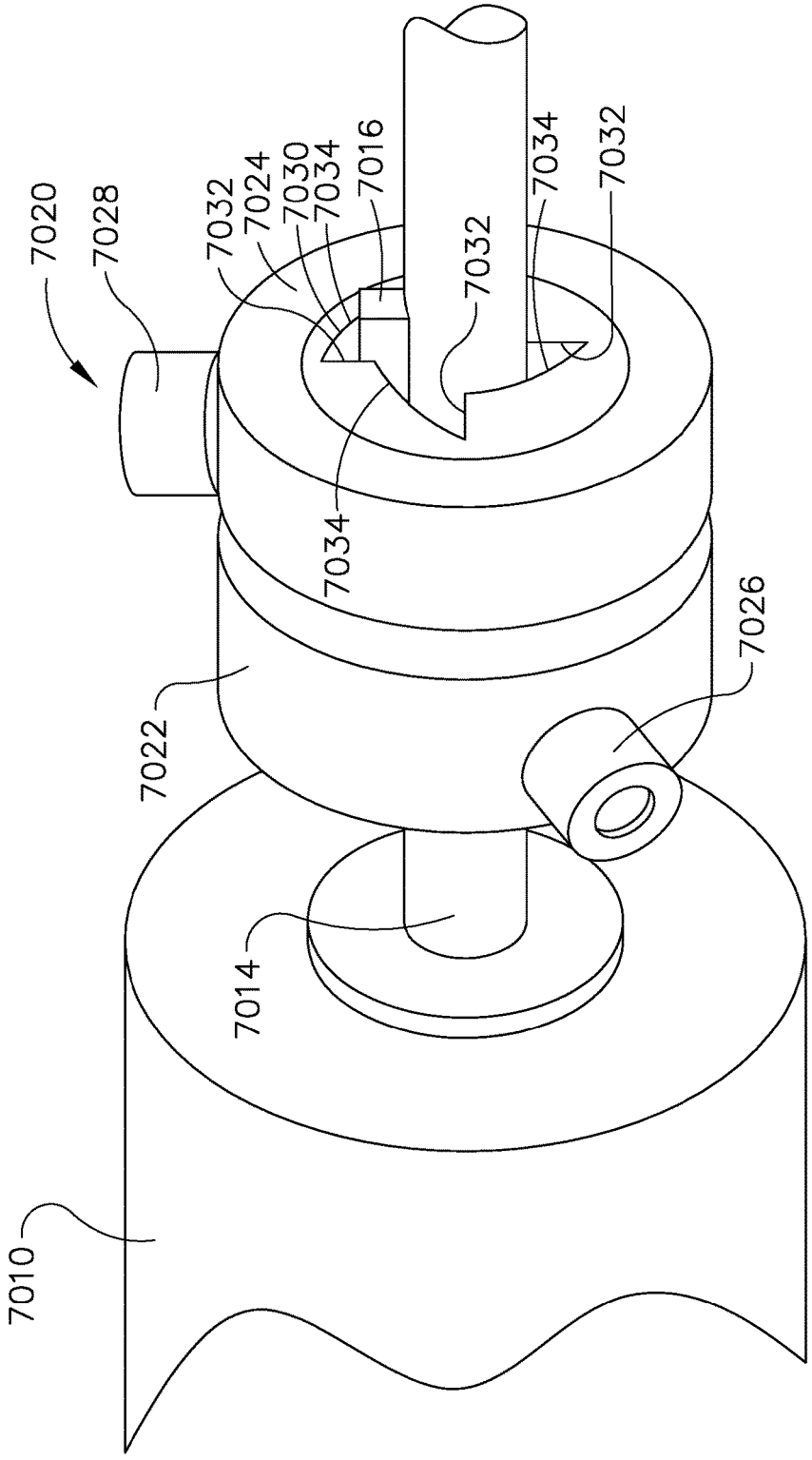
7020
7028
7032
7024
7030
7034
7016
7034
7032
7032
7034
7034
7026
7022
7014
7010

FIG. 168

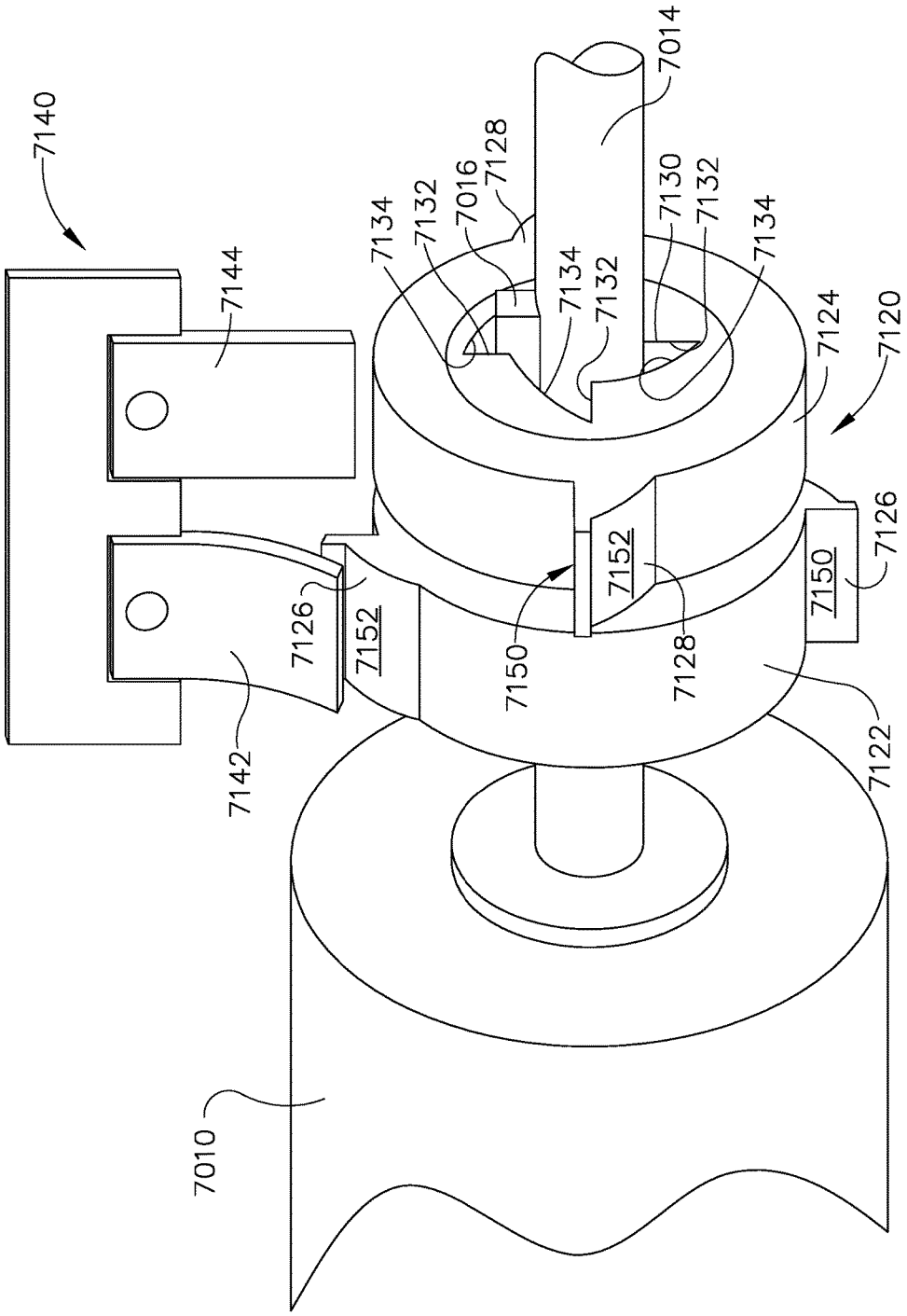
7140
7144
7142
7126
7152
7150
7128
7122
7124
7120
7134
7132
7016
7128
7014
7130
7010

FIG. 169

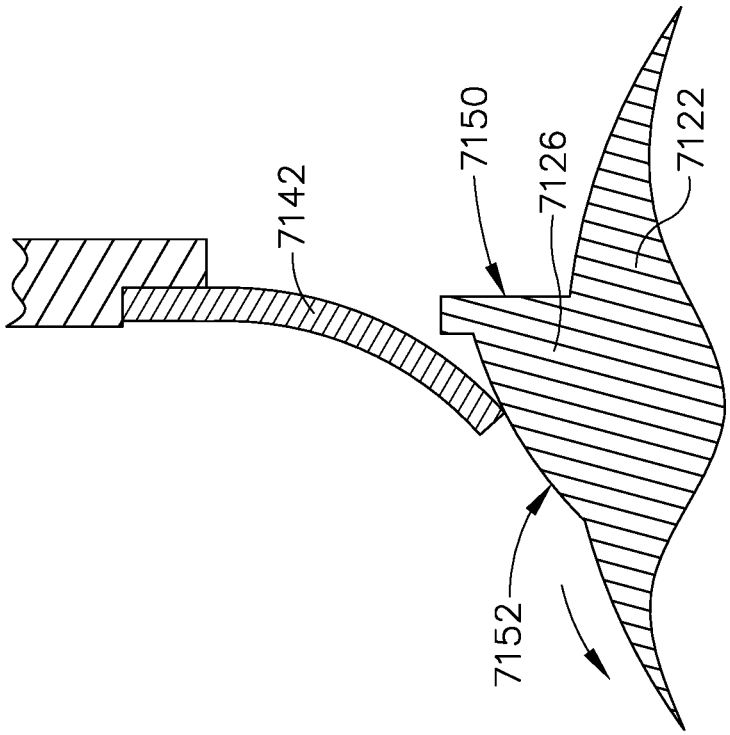

FIG. 171

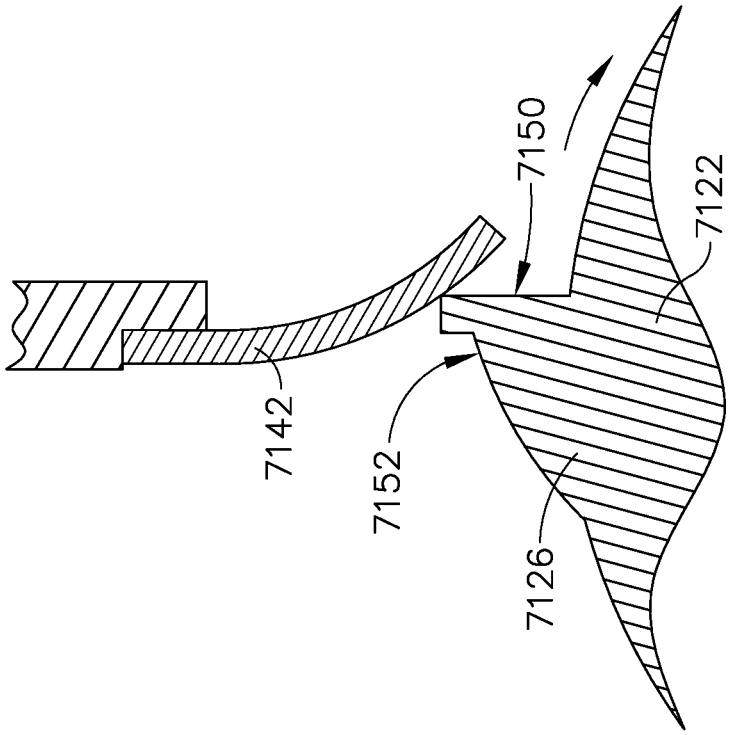

FIG. 170

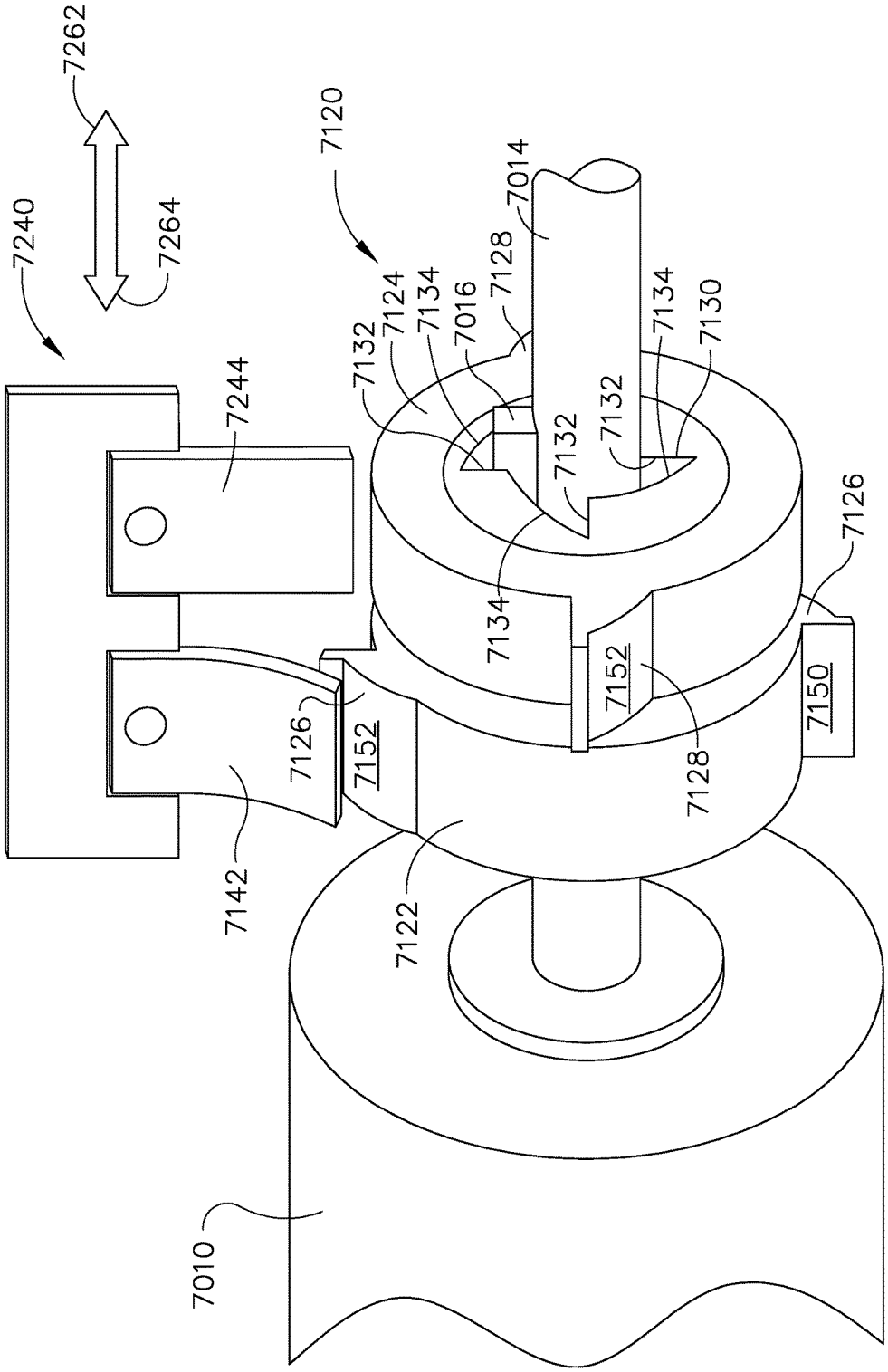
7262
7264
7240
7120
7014
7128
7124
7134
7016
7132
7134
7130
7244
7132
7132
7126
7134
7152
7150
7126
7152
7128
7142
7122
7010

FIG. 172

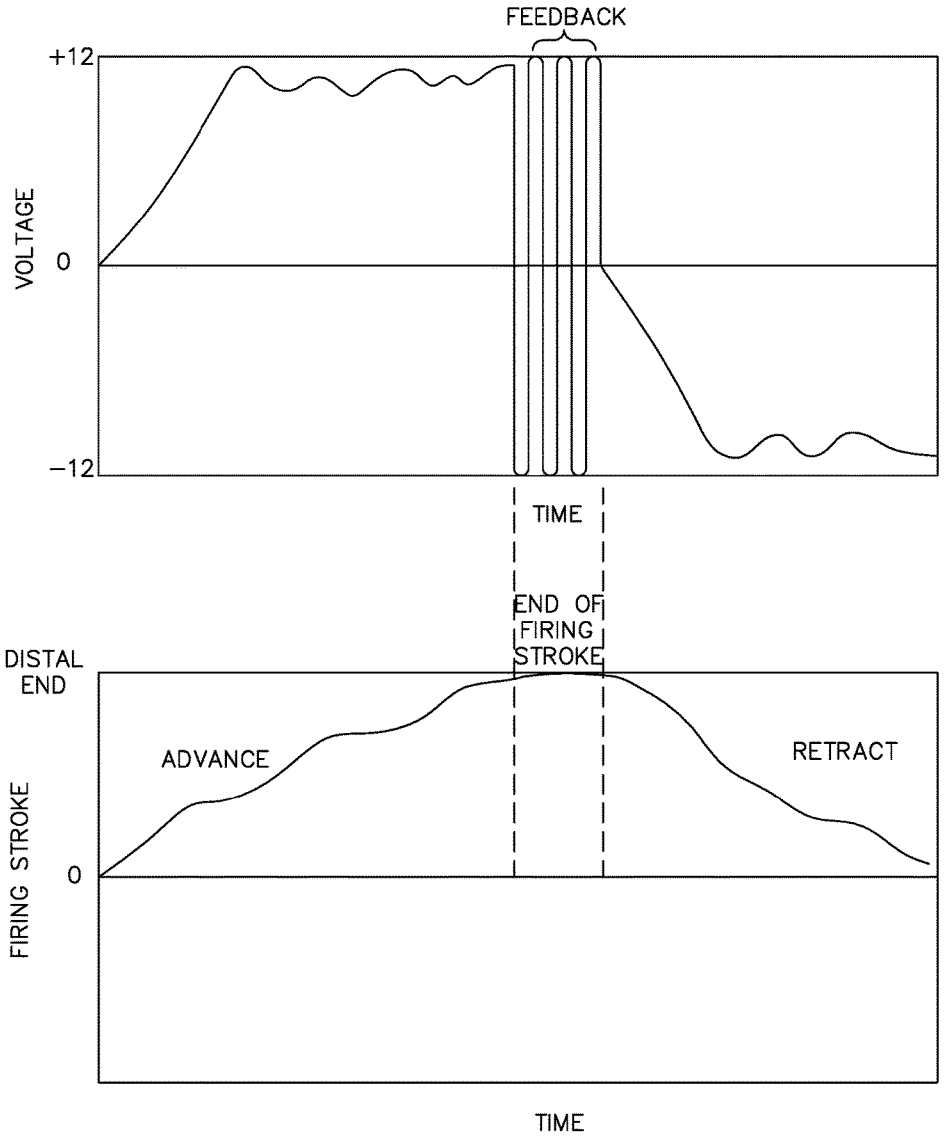
FEEDBACK
+12
VOLTAGE
0
−12
TIME
END OF FIRING STROKE
DISTAL END
ADVANCE
RETRACT
FIRING STROKE
0
TIME

FIG. 173

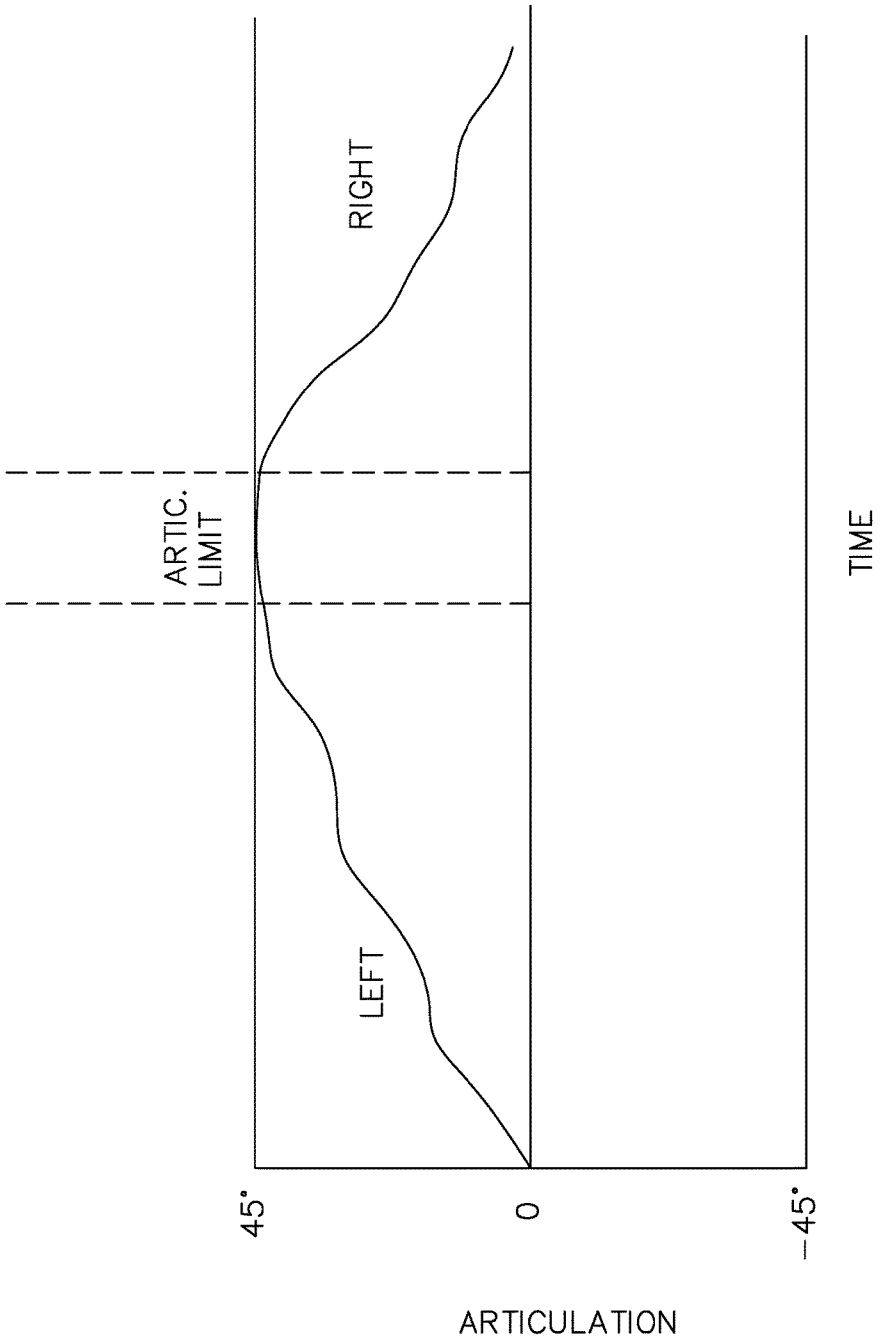

FIG. 174

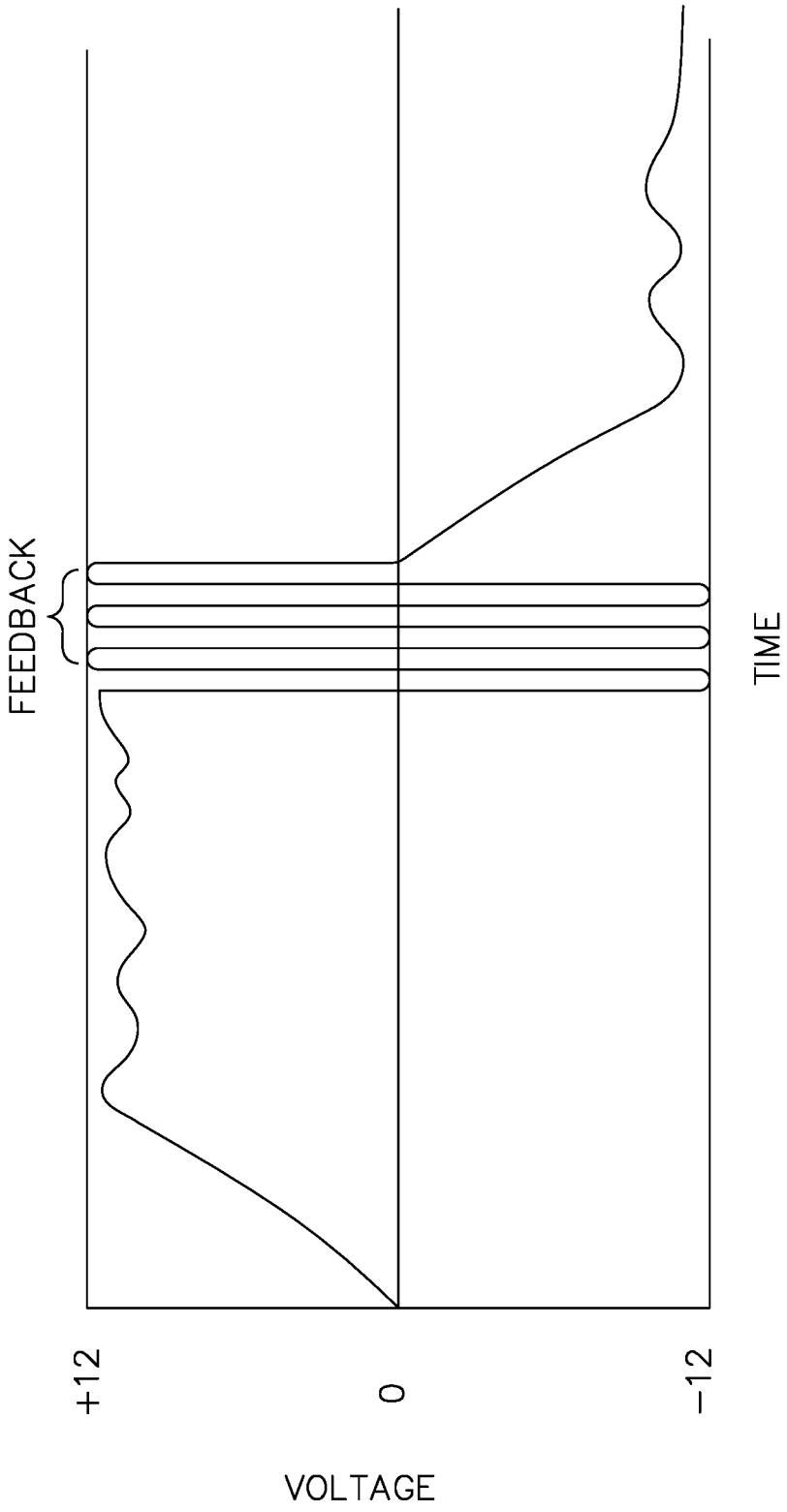

FIG. 175

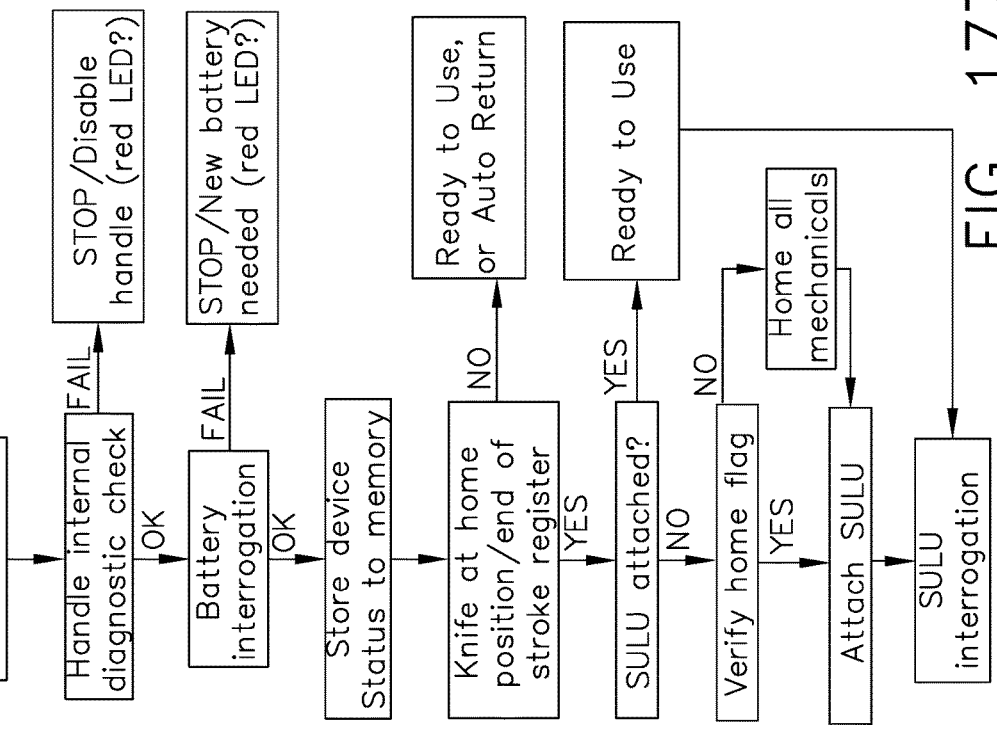

FIG. 177

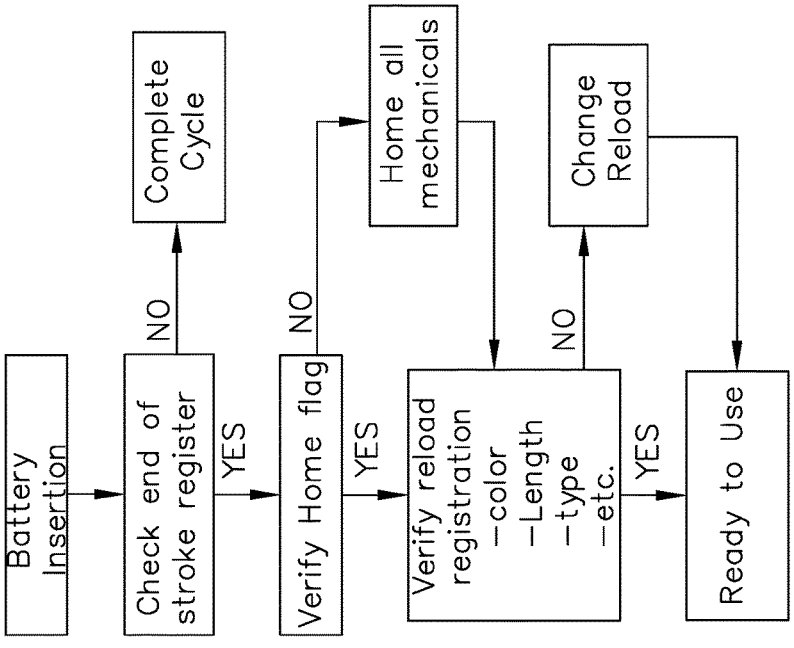

FIG. 176

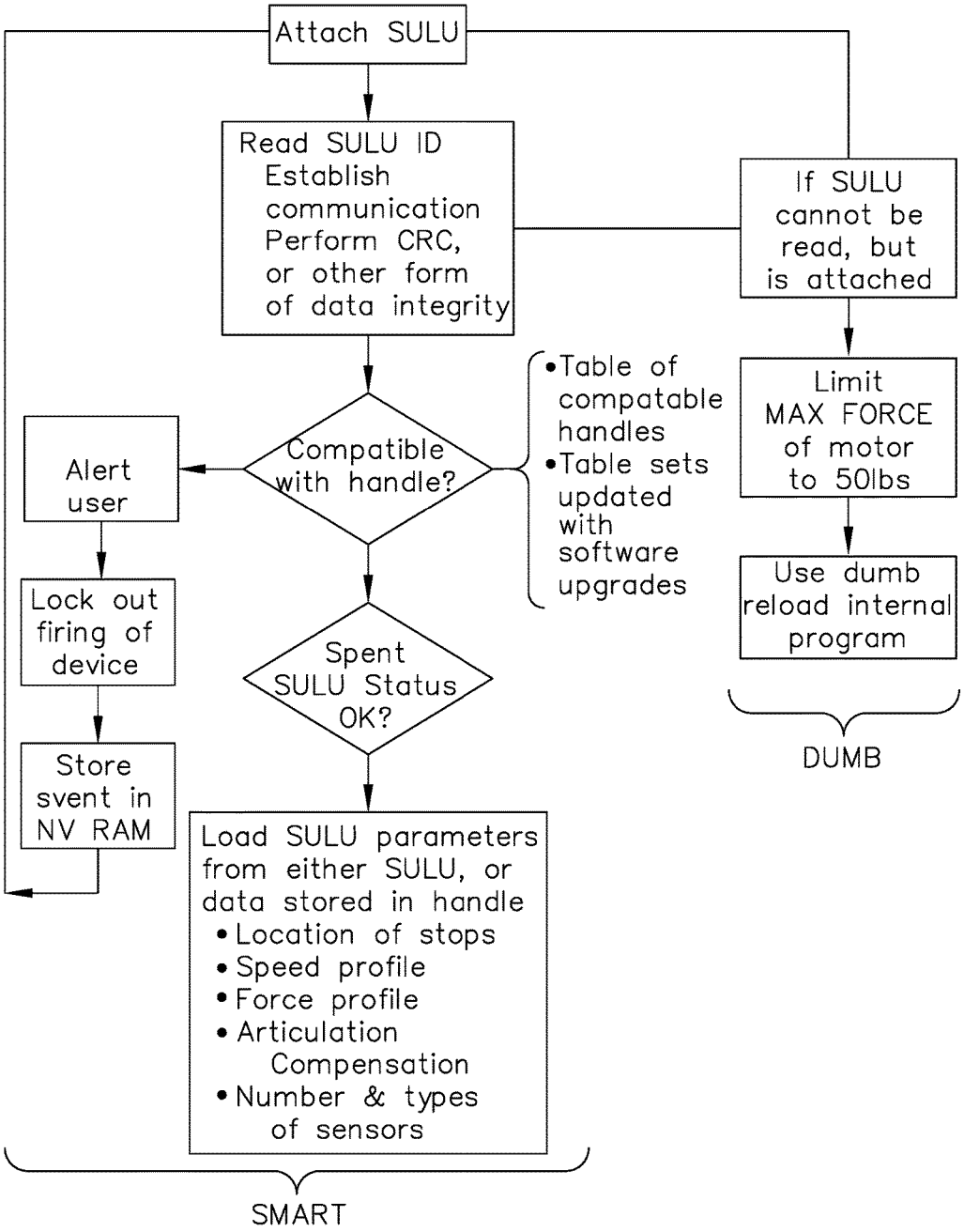
Attach SULU
Read SULU ID
Establish communication
Perform CRC, or other form of data integrity
If SULU cannot be read, but is attached
•Table of compatable handles
•Table sets updated with software upgrades
Compatible with handle?
Alert user
Limit MAX FORCE of motor to 50lbs
Use dumb reload internal program
Lock out firing of device
Spent SULU Status OK?
Store svent in NV RAM
Load SULU parameters from either SULU, or data stored in handle
• Location of stops
• Speed profile
• Force profile
• Articulation Compensation
• Number & types of sensors
DUMB
SMART

FIG. 178

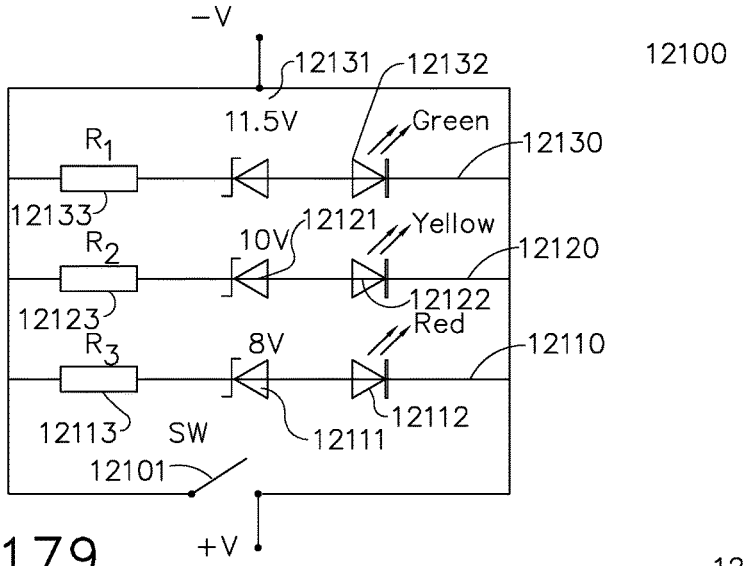

FIG. 179

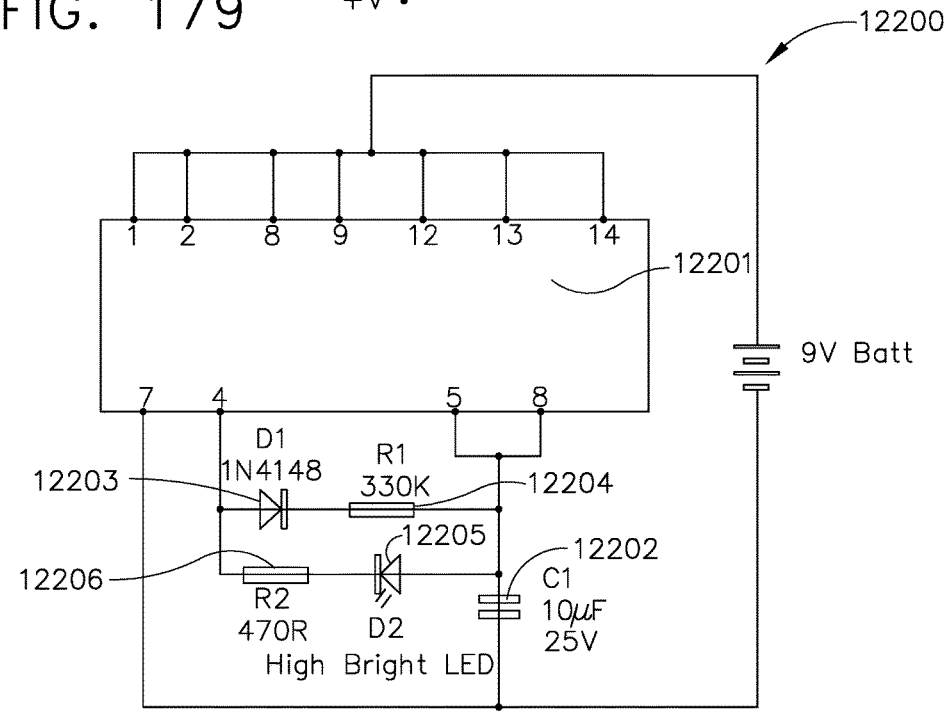

FIG. 180

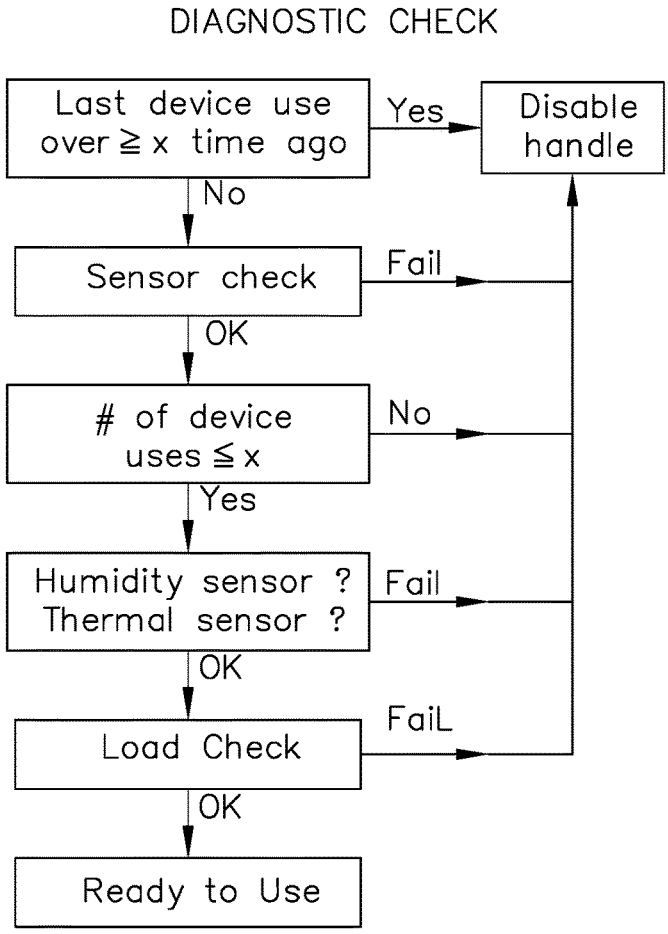

FIG. 181

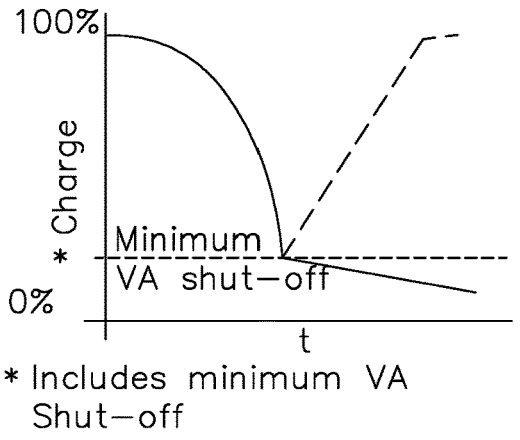

FIG. 182

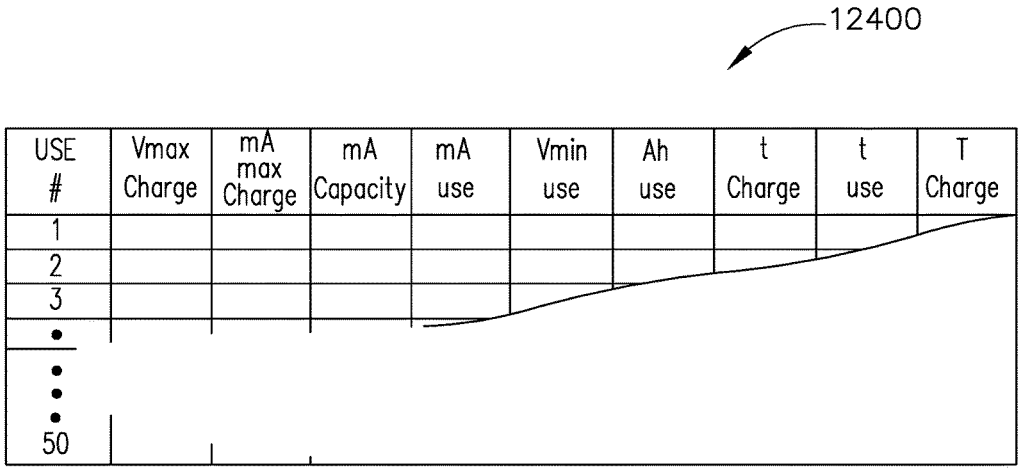

FIG. 183

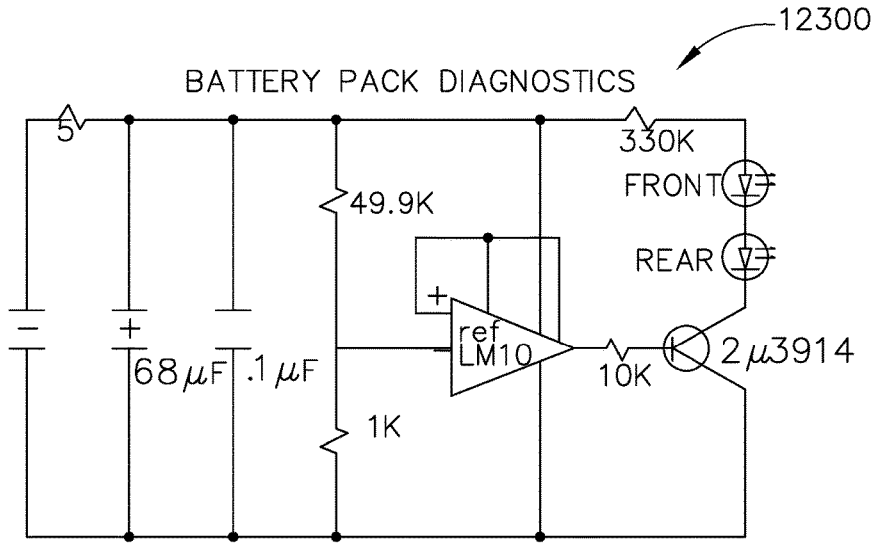

FIG. 184

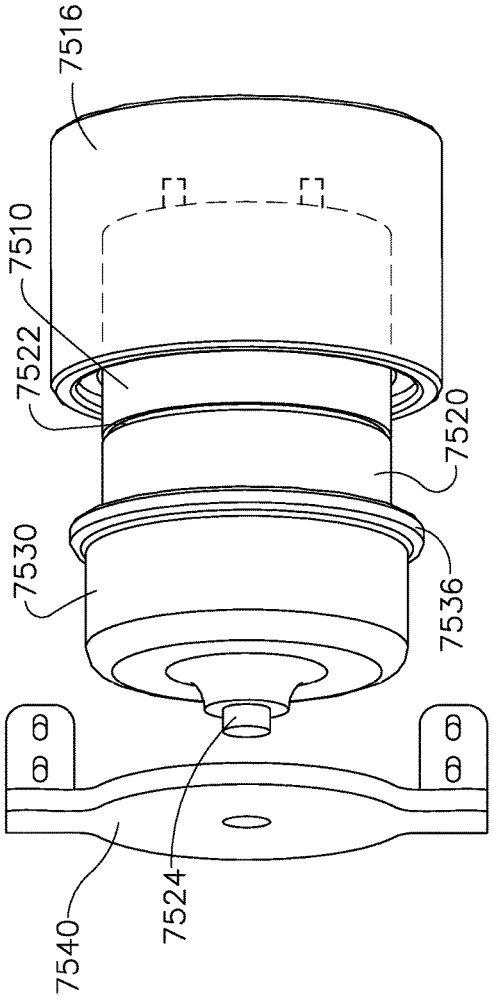

FIG. 185

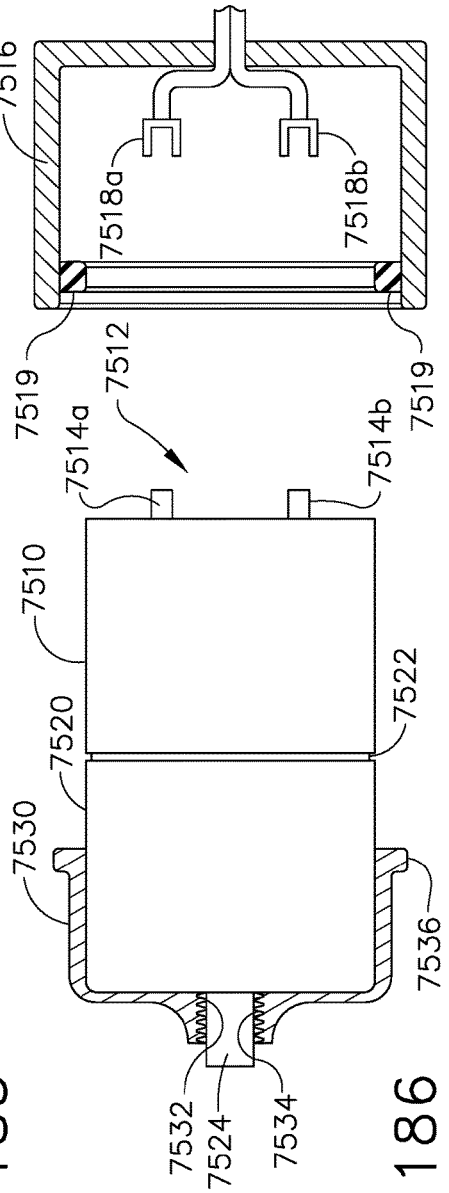

FIG. 186

TORQUE OPTIMIZATION FOR SURGICAL INSTRUMENTS

CROSS-REFERENCE TO RELATED APPLICATIONS

[0001] This application is a continuation application claiming priority under 35 U.S.C. § 120 to U.S. patent application Ser. No. 14/553,293, entitled TORQUE OPTIMIZATION FOR SURGICAL INSTRUMENTS, filed Nov. 25, 2014, now U.S. Patent Application Publication No. 2015/0076209, which is a continuation application claiming priority under 35 U.S.C. § 120 to U.S. patent application Ser. No. 13/974,206, entitled TORQUE OPTIMIZATION FOR SURGICAL INSTRUMENTS, filed Aug. 23, 2013, now U.S. Patent Application Publication No. 2015/0053746, the entire disclosures of which are hereby incorporated by reference herein.

FIELD OF THE INVENTION

[0002] The present invention relates to surgical instruments and, in various arrangements, to powered surgical cutting and stapling instruments and staple cartridges therefor that are designed to cut and staple tissue.

BACKGROUND

[0003] Surgical staplers are often used to deploy staples into soft tissue to reduce or eliminate bleeding from the soft tissue, especially as the tissue is being transected, for example. Surgical staplers, such as an endocutter, for example, can comprise an end effector which can be moved, or articulated, with respect to an elongated shaft assembly. End effectors are often configured to secure soft tissue between first and second jaw members where the first jaw member often includes a staple cartridge which is configured to removably store staples therein and the second jaw member often includes an anvil. Such surgical staplers can include a closing system for pivoting the anvil relative to the staple cartridge.

[0004] Surgical staplers, as outlined above, can be configured to pivot the anvil of the end effector relative to the staple cartridge in order to capture soft tissue therebetween. In various circumstances, the anvil can be configured to apply a clamping force to the soft tissue in order to hold the soft tissue tightly between the anvil and the staple cartridge. If a surgeon is unsatisfied with the position of the end effector, however, the surgeon must typically activate a release mechanism on the surgical stapler to pivot the anvil into an open position and then reposition the end effector. Thereafter, staples are typically deployed from the staple cartridge by a driver which traverses a channel in the staple cartridge and causes the staples to be deformed against the anvil and secure layers of the soft tissue together. Often, as known in the art, the staples are deployed in several staple lines, or rows, in order to more reliably secure the layers of tissue together. The end effector may also include a cutting member, such as a knife, for example, which is advanced between two rows of the staples to resect the soft tissue after the layers of the soft tissue have been stapled together.

[0005] Such surgical staplers and effectors may be sized and configured to be inserted into a body cavity through a trocar or other access opening. The end effector is typically coupled to an elongated shaft that is sized to pass through the trocar or opening. The elongated shaft assembly is often operably coupled to a handle that supports control systems and/or triggers for controlling the operation of the end effector. To facilitate proper location and orientation of the end effector within the body, many surgical instruments are configured to facilitate articulation of the end effector relative to a portion of the elongated shaft.

[0006] Powered surgical instruments are disclosed in U.S. Patent Application Publication No. 2009/0090763, entitled POWERED SURGICAL STAPLING DEVICE (hereinafter "Zemlok '763"), the entire disclosure of which is hereby incorporated by reference herein. Powered surgical instruments are also disclosed in U.S. Patent Application Publication No. 2011/0278344, entitled POWERED SURGICAL INSTRUMENT (hereinafter "Zemlok '344"), now U.S. Pat. No. 8,201,721, the entire disclosure of which is hereby incorporated by reference herein.

[0007] The foregoing discussion is intended only to illustrate various aspects of the related art in the field of the invention at the time, and should not be taken as a disavowal of claim scope.

BRIEF DESCRIPTION OF THE DRAWINGS

[0008] The features and advantages of this invention, and the manner of attaining them, will become more apparent and the invention itself will be better understood by reference to the following description of embodiments of the invention taken in conjunction with the accompanying drawings, wherein:

[0009] FIG. **1** is a perspective view of a surgical instrument employing one form of retraction arrangement;

[0010] FIG. **2** is a perspective view of an exemplary loading unit that may be employed in connection with various surgical instruments disclosed herein;

[0011] FIG. **3** is an exploded perspective view of a portion of the loading unit depicted in FIG. **2**;

[0012] FIG. **4** is a top view of a portion of the surgical instrument of FIG. **1**;

[0013] FIG. **5** is a partial side view of a portion of the surgical instrument depicted in FIG. **4** with the clutch assembly in a disengaged position;

[0014] FIG. **6** is a top view of a portion of a retraction assembly embodiment and retraction lever arrangement thereof;

[0015] FIG. **7** is a partial exploded view of one form of a drive unit with portions thereof shown in cross-section;

[0016] FIG. **8** is another top view of a portion of the surgical instrument with the drive unit locking system in the locked position;

[0017] FIG. **9** is a top view of one form of a locking pawl assembly;

[0018] FIG. **10** is a side elevational view of the locking pawl assembly of FIG. **9**;

[0019] FIG. **11** is a bottom view of the locking pawl assembly of FIGS. **9** and **10**;

[0020] FIG. **12** is a front view of a gear box housing embodiment;

[0021] FIG. **13** is a partial side cross-sectional view of a surgical instrument embodiment with portions thereof shown in cross-section and with the drive unit locking system in a locked orientation;

[0022] FIG. **14** is another partial side cross-sectional view of the surgical instrument of FIG. **13** with the drive unit locking system in an unlocked orientation;

[0023] FIG. **15** is a top view of another surgical instrument embodiment with a portion of the housing removed to expose a portion of the instrument's drive unit locking system arrangement;

[0024] FIG. **16** is a partial side cross-sectional view of the surgical instrument embodiment of FIG. **15** with portions thereof shown in cross-section and with solid lines illustrating the drive unit locking system in a locked orientation and with broken lines illustrating the drive unit locking system in an unlocked orientation;

[0025] FIG. **17** is another partial top view of the surgical instrument embodiment of FIGS. **15** and **16** with solid lines illustrating the position of the retraction lever prior to actuation and broken lines illustrating the position of the retraction lever after initial actuation;

[0026] FIG. **18** is another partial top view of the surgical instrument embodiment of FIGS. **15-17** with broken lines illustrating the retraction lever in a fully actuated position;

[0027] FIG. **19** is a partial top view of a portion of another surgical instrument embodiment with a portion of the housing omitted to expose the instrument's drive unit locking system and with solid lines depicting the retraction lever in an un-actuated position and broken lines illustrating the retraction lever after initial actuation;

[0028] FIG. **20** is a partial top view of another surgical instrument embodiment with a portion of the housing omitted to expose the drive unit locking system thereof in a locked orientation;

[0029] FIG. **21** is another partial top view of the surgical instrument embodiment of FIG. **20** with the drive unit locking system in an unlocked orientation;

[0030] FIG. **22** is a partial cross-sectional side view of a portion of a surgical instrument and end effector with the retraction assembly thereof in an unactuated orientation;

[0031] FIG. **23** is another partial cross-sectional side view of the surgical instrument and end effector of FIG. **22** after the firing rod assembly has been fired;

[0032] FIG. **24** is another partial cross-sectional side view of the surgical instrument and end effector of FIG. **23** and after the retraction assembly has been actuated to retract the drive beam back to its starting position within the end effector;

[0033] FIG. **25** is a partial cross-sectional side view of a portion of another surgical instrument and end effector in a prefire condition and with the retraction assembly thereof in an unactuated orientation;

[0034] FIG. **26** is another partial cross-sectional side view of the surgical instrument and end effector of FIG. **25** after firing;

[0035] FIG. **27** is another partial cross-sectional side view of the surgical instrument and end effector of FIG. **26** with the latch of the retraction assembly thereof in an unlatched orientation;

[0036] FIG. **28** is another partial cross-sectional side view of the surgical instrument and end effector of FIG. **27** with the distal firing rod portion in a retracted orientation;

[0037] FIG. **29** is a partial cross-sectional view of a portion of another surgical instrument embodiment with the drive coupler assembly thereof in an articulation orientation;

[0038] FIG. **30** is a partial cross-sectional view of a portion of the surgical instrument embodiment of FIG. **29** with the drive coupler assembly thereof in a firing orientation;

[0039] FIG. **31** is an enlarged cross-sectional view of the drive coupler assembly of the surgical instrument of FIGS. **29** and **30** with the coupler selector member shown in solid lines in the articulation orientation and with the coupler selector member shown in broken lines in a firing orientation;

[0040] FIG. **32** is a partial cross-sectional view of a portion of another surgical instrument embodiment;

[0041] FIG. **33** is an enlarged partial cross-sectional view of a portion of the surgical instrument of FIG. **32**;

[0042] FIG. **34** is another enlarged partial cross-sectional view of a portion of the surgical instrument of FIGS. **32** and **33** with the travel limiter thereof in its distal-most orientation;

[0043] FIG. **35** is another enlarged partial cross-sectional view of a portion of the surgical instrument of FIGS. **32-34** with the travel limiter thereof in its proximal-most orientation;

[0044] FIG. **36** is a partial cross-sectional view of the surgical instrument of FIG. **33** taken along line **36-36** in FIG. **33**;

[0045] FIG. **37** is a partial perspective view of a portion of the surgical instrument of FIGS. **32-36**;

[0046] FIG. **38** is a partial perspective view of a shaft of a surgical instrument, a collar, and a disposable loading unit unattached to the shaft according to various embodiments of the present disclosure;

[0047] FIG. **39** is a partial perspective view of the shaft, the collar and the disposable loading unit of FIG. **38**, depicting the disposable loading unit attached to the shaft;

[0048] FIG. **40** is a partial exploded perspective view of the shaft, the collar, and the disposable loading unit of FIG. **38**;

[0049] FIG. **41** is another partial exploded perspective view of the shaft, the collar, and the disposable loading unit of FIG. **38**;

[0050] FIG. **42** is a perspective view of a distal attachment portion of the disposable loading unit of FIG. **38**;

[0051] FIG. **43** is another perspective view of the distal attachment portion of the disposable loading unit of FIG. **38**;

[0052] FIG. **44** is a perspective view of a proximal attachment portion of the shaft of FIG. **38**;

[0053] FIG. **45** is another perspective view of the proximal attachment portion of the shaft of FIG. **38**;

[0054] FIG. **46** is a perspective view of the collar and a firing shaft of the surgical instrument of FIG. **38**;

[0055] FIG. **47** is a partial perspective, cross-section view of the disposable loading unit, the collar, and the shaft of FIG. **38**, depicting the disposable loading unit attached to the shaft;

[0056] FIG. **48** is a partial elevation, cross-section view of the disposable loading unit, the collar, and the shaft of FIG. **38**, depicting the disposable loading unit unattached to the shaft;

[0057] FIG. **49** is a partial elevation, cross-section view of the disposable loading unit, the collar and the shaft of FIG. **38**, depicting the disposable loading unit attached to the shaft;

[0058] FIG. **50** is an elevation view of the collar and the shaft of FIG. **38** taken along the plane indicated in FIG. **48**;

[0059] FIG. **51** is a perspective, partial cross-section view of the disposable loading unit, the collar, and the shaft of FIG. **38**, depicting the disposable loading unit unattached to

the shaft, and further depicting the collar in an initial orientation relative to the shaft;

[0060] FIG. **52** is a perspective, partial cross-section view of the disposable loading unit, the collar, and the shaft of FIG. **38**, depicting the disposable loading unit unattached to the shaft, and further depicting the collar in the initial orientation relative to the shaft;

[0061] FIG. **53** is a perspective, partial cross-section view of the disposable loading unit, the collar, and the shaft of FIG. **38**, depicting the disposable loading unit entering the shaft, and further depicting the collar in the initial orientation relative to the shaft;

[0062] FIG. **54** is a perspective, partial cross-section view of the disposable loading unit, the collar, and the shaft of FIG. **38**, depicting the disposable loading unit entering the shaft, and further depicting the collar in a secondary, rotated orientation relative to the shaft;

[0063] FIG. **55** is a perspective, partial cross-section view of the disposable loading unit, the collar, and the shaft of FIG. **38**, depicting the disposable loading unit entering the shaft, and further depicting the collar in the secondary, rotated orientation relative to the shaft;

[0064] FIG. **56** is a perspective, partial cross-section view of the disposable loading unit, the collar, and the shaft of FIG. **38**, depicting the disposable loading unit fully inserted into the shaft, and further depicting the collar in the secondary, rotated orientation relative to the shaft;

[0065] FIG. **57** is a perspective, partial cross-section view of the disposable loading unit, the collar, and the shaft of FIG. **38**, depicting the disposable loading unit fully inserted into the shaft, and further depicting the collar in the initial orientation relative to the shaft;

[0066] FIG. **58** is a perspective, partial cross-section view of the disposable loading unit, the collar, and the shaft of FIG. **38**, depicting the disposable loading unit fully inserted into the shaft, and further depicting the collar in the initial orientation relative to the shaft;

[0067] FIG. **59** is a partial, perspective, cross-section view of a shaft of a surgical instrument and a disposable loading unit unattached to the shaft according to various embodiments of the present disclosure;

[0068] FIG. **60** is a partial, perspective, cross-section view of the shaft and the disposable loading unit of FIG. **59**, depicting the disposable loading unit partially-inserted into the shaft, and further depicting a latch in an unlatched position;

[0069] FIG. **61** is a partial, perspective, cross-section view of the shaft and the disposable loading unit of FIG. **59**, depicting the disposable loading unit fully-inserted into the shaft, and further depicting the latch in a latched position;

[0070] FIG. **62** is a partial, elevation, cross-section view of the shaft and the disposable loading unit of FIG. **59**, depicting the disposable loading unit fully-inserted into the shaft, and further depicting the latch in the latched position;

[0071] FIG. **63** is a schematic of a torque-voltage curve according to various embodiments of the present disclosure;

[0072] FIG. **64**(*a*) is a schematic of high duty cycle pulses delivered by a pulse width modulation circuit according to various embodiments of the present disclosure;

[0073] FIG. **64**(*b*) is a schematic of low duty cycle pulses delivered by a pulse width modulation circuit according to various embodiments of the present disclosure;

[0074] FIG. **65**(*a*) is a schematic of a firing element driven by the high duty cycle pulses of the pulse width modulation circuit of FIG. **64**(*a*);

[0075] FIG. **65**(*b*) is a schematic of a firing element driven by the low duty cycle pulses of the pulse width modulation circuit of FIG. **64**(*b*);

[0076] FIGS. **66**(*a*)-**66**(*c*) are schematics of pulse width modulation circuits having a primary set of coils and a secondary set of coils according to various embodiments of the present disclosure;

[0077] FIG. **67** is a graph depicting speed and torque throughout a firing stroke according to various embodiments of the present disclosure;

[0078] FIG. **68** is a graph depicting a speed limiting trial segment during a firing stroke according to various embodiments of the present disclosure;

[0079] FIGS. **69** and **70** are schematics of a simplified stepper motor according to various embodiments of the present disclosure;

[0080] FIGS. **71**-**73** are schematics of a hybrid stepper motor according to various embodiments of the present disclosure;

[0081] FIGS. **74**(*a*)-**74**(*c*) are schematics of the hybrid stepper motor of FIGS. **71**-**73** illustrating the changing polarities;

[0082] FIG. **75** is a perspective view of a display that includes a touch screen for use with an endoscope according to various embodiments of the present disclosure;

[0083] FIG. **76** is an elevation view of a first layer of information for depiction on the display of FIG. **75**, wherein the first layer of information includes video feedback of a disposable loading unit (DLU) attached to a surgical instrument as viewed by the endoscope;

[0084] FIG. **77** is an elevation view of a second layer of information for depiction on the display of FIG. **75**, wherein the second layer of information includes a control panel for accepting input via the touch screen;

[0085] FIG. **78** is an elevation view of the second layer of information of FIG. **77** overlaying the first layer of information of FIG. **76**;

[0086] FIG. **79** is an elevation view of the second layer of information of FIG. **77** overlaying the first layer of information of FIG. **76**, wherein the second layer of information includes numerical data related to the progression of the knife and a visual representation of the progression of the knife when the knife is near the beginning of a firing stroke;

[0087] FIG. **80** is an elevation view of the second layer of information of FIG. **77** overlaying the first layer of information of FIG. **76**, wherein the second layer of information includes numerical data related to the progression of the knife and a visual representation of the progression of the knife when the knife is near the distal end of the firing stroke;

[0088] FIG. **81** is an elevation view of the second layer of information FIG. **77** overlaying the first layer of information of FIG. **76**, wherein the second layer of information includes a symbolic representation of the knife overlapping the detected position of the knife in the DLU depicted in the first layer of information;

[0089] FIG. **82** is an elevation view of the second layer of information of FIG. **77** overlaying the first layer of information of FIG. **76**, wherein the second layer of information includes a graphical representation of the speed of the distally advancing knife during a firing stroke;

[0090] FIG. **83** is an elevation view of the second layer of information of FIG. **77** overlaying the first layer of information of FIG. **76**, wherein the second layer of information includes a graphical representation of the clamping force exerted by the DLU jaws on the tissue along the length of the DLU jaws;

[0091] FIG. **84** is an elevation view of the second layer of information of FIG. **77** overlaying the first layer of information of FIG. **76**, wherein the second layer of information includes numerical data related to the orientation of the DLU, and wherein the DLU depicted in the first layer of information is in an unarticulated orientation;

[0092] FIG. **85** is an elevation view of the second layer of information of FIG. **77** overlaying the first layer of information of FIG. **76**, wherein the second layer of information includes numerical data related to the orientation of the DLU and a visual representation of the orientation of the DLU, and wherein the DLU depicted in the first layer of information is in an articulated orientation;

[0093] FIG. **86** is an elevation view of the second layer of information of FIG. **77** overlaying the first layer of information of FIG. **76** illustrating input from a user for adjusting the articulation of the DLU via the touch screen of FIG. **75**;

[0094] FIG. **87** is an elevation view of the second layer of information of FIG. **77** overlaying the first layer of information of FIG. **76** illustrating a schematic for controlling the DLU and further illustrating input from a user for adjusting the articulation of the DLU by manipulating the schematic via the touch screen of FIG. **75**;

[0095] FIG. **88** is an elevation view of the second layer of information of FIG. **77** overlaying the first layer of information of FIG. **76** illustrating the DLU in an articulated orientation in the first layer of information in response to the user input illustrated in FIGS. **86** and **87**;

[0096] FIG. **89** is an elevation view of the second layer of information of FIG. **77** overlaying the first layer of information of FIG. **76** illustrating input from a user for controlling the closure of the moveable jaw via the touch screen of FIG. **75**;

[0097] FIG. **90** is an elevation view of the second layer of information of FIG. **77** overlaying the first layer of information of FIG. **76** illustrating the moveable jaw of the DLU in a clamped orientation in the first layer of information in response to the user input depicted in FIG. **89**;

[0098] FIG. **91** is an elevation view of a controller interface for the secondary layer of information of FIG. **77**;

[0099] FIG. **92** is an elevation view of the second layer of information of FIG. **77** overlaying the first layer of information of FIG. **76**, wherein the second layer of information includes the controller interface of FIG. **91** and a progression bar;

[0100] FIG. **93** is a schematic illustrating a communication system for a feedback controller and the endoscope, the surgical instrument, and the display of FIG. **75**;

[0101] FIG. **94** is an exploded view of a surgical instrument system including a handle and an end effector including a plurality of indicators in accordance with at least one embodiment;

[0102] FIG. **95** is a partial elevational view of a handle of a surgical instrument system including a plurality of indicators in accordance with at least one embodiment;

[0103] FIG. **96** is a partial cross-sectional view of a handle of a surgical instrument system including a trigger lock in accordance with at least one embodiment illustrated with the trigger lock in an unlocked condition;

[0104] FIG. **97** is a partial cross-sectional view of the handle of FIG. **96** illustrating the trigger lock in a locked condition;

[0105] FIG. **98** is a cross-sectional view of the trigger lock of FIG. **96** illustrating the trigger lock in its unlocked condition;

[0106] FIG. **99** is a cross-sectional view of the trigger lock of FIG. **96** illustrating the trigger lock in its locked condition;

[0107] FIG. **99**A is a flow chart outlining an operating program of a controller of a surgical instrument for assessing whether the surgical instrument has been exposed to a temperature which exceeds its threshold temperature and determining the manner in which to notify the user of the surgical instrument that the threshold temperature has been exceeded;

[0108] FIG. **100** is a cross-sectional view of a handle of a surgical instrument system including a trigger lock in a locked condition in accordance with at least one embodiment;

[0109] FIG. **101** is a cross-sectional detail view of the handle of FIG. **100** illustrating the trigger lock in its locked condition;

[0110] FIG. **102** is another cross-sectional detail view of the handle of FIG. **100** illustrating the trigger lock in an unlocked condition;

[0111] FIG. **103** is a perspective view of the trigger lock of FIG. **100** illustrated in its locked condition;

[0112] FIG. **104** is a partial cross-sectional perspective view of a handle of a surgical instrument including a trigger lock in a locked condition in accordance with at least one embodiment;

[0113] FIG. **105** is a partial cross-sectional perspective view of the handle of FIG. **104** illustrated in an unlocked condition;

[0114] FIG. **106** is a partial cross-sectional left side view of the handle of FIG. **104** illustrated in its locked condition;

[0115] FIG. **107** is a partial cross-sectional right side view of the handle of FIG. **104** illustrated in its locked condition;

[0116] FIG. **108** is a partial cross-sectional left side view of the handle of FIG. **104** illustrated in its unlocked condition;

[0117] FIG. **109** is a partial cross-sectional right side view of the handle of FIG. **104** illustrated in its unlocked condition;

[0118] FIG. **110** is a process flow diagram illustrating the steps that a controller of a surgical instrument can utilize to process a signal received from an end effector attached to the surgical instrument;

[0119] FIG. **110**A is a schematic depicting an array of parameters which can be supplied from an end effector to a surgical instrument;

[0120] FIG. **111** is a process flow diagram illustrating the steps for using the end effector and surgical instrument of FIG. **110**;

[0121] FIG. **112** is a schematic illustrating an interconnection between an end effector and a shaft of a surgical instrument in accordance with at least one embodiment;

[0122] FIG. **113** is a plan view of a printed circuit board of the interconnection of FIG. **112**;

[0123] FIG. **114** is a partial perspective view of an end effector of a surgical instrument in accordance with at least one embodiment;

[0124] FIG. **115** is a partial perspective view of the end effector of FIG. **114** and a shaft of a surgical instrument;

[0125] FIG. **116** is a cross-sectional view of the end effector of FIG. **114** attached to the shaft of FIG. **115**;

[0126] FIG. **117** is a cross-sectional view of an interconnection between an end effector and a shaft in accordance with at least one embodiment;

[0127] FIG. **118** is a cross-sectional view of an interconnection between an end effector and a shaft in accordance with at least one embodiment;

[0128] FIG. **119** is a cross-sectional view of an interconnection between an end effector and a shaft in accordance with at least one embodiment;

[0129] FIG. **120** is a detail view of the interconnection of FIG. **119**;

[0130] FIG. **121** is a side view of an end effector comprising an anvil and an anvil position indicator in accordance with at least one embodiment illustrating the anvil in an open position;

[0131] FIG. **122** is a side view of the end effector of FIG. **121** illustrating the anvil in a partially-closed position;

[0132] FIG. **123** is another side view of the end effector of FIG. **121** illustrating the anvil in a partially-closed position;

[0133] FIG. **124** is another side view of the end effector of FIG. **121** illustrating the anvil in a partially-closed position;

[0134] FIG. **125** is a detail view of the anvil position indicator of FIG. **121** depicting the anvil in the position illustrated in FIG. **121**;

[0135] FIG. **126** is a detail view of the anvil position indicator of FIG. **121** depicting the anvil in the position illustrated in FIG. **122**;

[0136] FIG. **127** is a detail view of the anvil position indicator of FIG. **121** depicting the anvil in the position illustrated in FIG. **123**;

[0137] FIG. **128** is a detail view of the anvil position indicator of FIG. **121** depicting the anvil in the position illustrated in FIG. **124**;

[0138] FIG. **129** illustrates a cross-sectional side of view of a surgical instrument according to certain embodiments described herein;

[0139] FIG. **130** illustrates a power system for powering the surgical instrument of FIG. **129**, wherein the power system is in communication with a control system of the surgical instrument of FIG. **129**;

[0140] FIG. **131** illustrates a battery pack of the power system of FIG. **130** connected to a charger base;

[0141] FIG. **132** illustrates a power management circuit of the power system of FIG. **130**;

[0142] FIG. **133** illustrates a schematic block diagram exemplifying operation parameters of the power system of FIG. **130**;

[0143] FIG. **134** illustrates a perspective view of a power source of a surgical instrument according to various embodiments described herein;

[0144] FIG. **135** illustrates a perspective view of the power source of FIG. **134** disassembled according to various embodiments described herein;

[0145] FIG. **136** illustrates a circuit diagram of a circuit of the power source of FIG. **134** including an intact breakable portion according to various embodiments described herein;

[0146] FIG. **137** illustrates the circuit diagram of the circuit of FIG. **136** with the breakable portion broken according to various embodiments described herein;

[0147] FIG. **138** illustrates a block diagram of a system for protecting data stored in a memory from unauthorized access according to various embodiments described herein;

[0148] FIG. **139** illustrates a perspective view of a power source of a surgical instrument including a covered data access portal;

[0149] FIG. **140** illustrates the data access portal of FIG. **139** in an uncovered configuration;

[0150] FIG. **141** illustrates a perspective view of a power source of a surgical instrument including an internal data access portal;

[0151] FIG. **142** illustrates a block diagram of a system for protecting data stored in a memory from unauthorized access according to various embodiments described herein;

[0152] FIG. **143** illustrates a perspective view of a power source of a surgical instrument according to various embodiments described herein;

[0153] FIG. **144** illustrates a perspective view of the power source of FIG. **143** coupled to the surgical instrument;

[0154] FIG. **145** illustrates LEDs of the power source of FIG. **143** in different configurations according to various embodiments described herein;

[0155] FIG. **146** illustrates a side view of a surgical instrument including a housing in accordance with various embodiments described herein;

[0156] FIG. **147** illustrates a side view of the housing of FIG. **146** with an outer shell removed to expose detachable components secured to the housing by securing members;

[0157] FIG. **148** illustrates a side view of the housing in FIG. **147** with the detachable components removed from the housing;

[0158] FIG. **149** is a schematic depicting detectable indentations, notches, or impressions of a barcode defined in a surface of an end effector;

[0159] FIG. **150** is a schematic of an exemplary bar code usable with a bar code reader;

[0160] FIG. **151** is a partial side view of a shaft of an end effector including a bar code in accordance with at least one embodiment;

[0161] FIG. **152** is a partial elevational view of an end effector of a surgical instrument including a bar code in accordance with at least one embodiment;

[0162] FIG. **153** is a partial perspective view of a handle of a surgical instrument including a bar code reader in accordance with at least one embodiment;

[0163] FIG. **154** is a cross-sectional view of the bar code reader of FIG. **153** illustrated with an end effector positioned therein;

[0164] FIG. **155** is an exploded perspective view of an end effector and a shaft of a surgical instrument in accordance with at least one embodiment;

[0165] FIG. **156** is an exploded perspective view of an end effector and a shaft of a surgical instrument in accordance with at least one embodiment wherein the end effector comprises portions of a firing member releasably locked together;

[0166] FIG. **157** is a partial perspective view of the firing member portions of FIG. **156** locked together by a lock member;

[0167] FIG. **158** is a partial perspective view of the firing member portions and the lock member of FIG. **156** illus-

trated with a portion of the firing member removed to illustrate the lock member releasably locking the firing member portions together;

[0168] FIG. **159** is an exploded view of the firing member of FIG. **156** and a release actuator configured to move the lock member into an unlocked condition and unlock the firing member portions;

[0169] FIG. **160** is a partial exploded view of an interconnection between the release actuator of FIG. **159** and a corresponding shaft release actuator;

[0170] FIG. **161** is a cross-sectional view of the interconnection of FIG. **160**;

[0171] FIG. **162** is an exploded perspective view of an assembly comprising a motor, a drive shaft, and a slip clutch configured to selectively transmit rotation between the motor and the drive shaft;

[0172] FIG. **163** is a cross-sectional view of the assembly of FIG. **162**;

[0173] FIG. **164** is a perspective view of a biasing element of the slip clutch of FIG. **162**;

[0174] FIG. **165** is a cross-sectional view of the assembly of FIG. **162** illustrating a clutch element of the slip clutch in a neutral position;

[0175] FIG. **166** is a cross-sectional view of the assembly of FIG. **162** illustrating the clutch element of FIG. **165** in a forward position;

[0176] FIG. **167** is a cross-sectional view of the assembly of FIG. **162** illustrating the clutch element of FIG. **165** in a reverse position;

[0177] FIG. **168** is a perspective view of a motor and a gear assembly according to various embodiments of the present disclosure;

[0178] FIG. **169** is a perspective view of a motor, a gear assembly, and an audio feedback generator according to various embodiments of the present disclosure;

[0179] FIG. **170** is an elevational view of a pick on a disk of the gear assembly of FIG. **169**, depicting the disk rotating in a clockwise direction and the pick engaging a clicker of the audio feedback generator of FIG. **169** according to various embodiments of the present disclosure;

[0180] FIG. **171** is an elevational view of a pick on a disk of the gear assembly of FIG. **169**, depicting the disk rotating in a counterclockwise direction and the pick engaging a clicker of the audio feedback generator of FIG. **169** according to various embodiments of the present disclosure;

[0181] FIG. **172** is a perspective view of a motor, a gear assembly having multiple disks, and an audio feedback generator according to various embodiments of the present disclosure;

[0182] FIG. **173** is a graphical depiction of feedback generated near the end of a firing stroke by the audio feedback generator of FIG. **172** according to various embodiments of the present disclosure;

[0183] FIGS. **174** and **175** are graphical depictions of feedback generated near the articulation limit of a loading unit by the audio feedback generator of FIG. **172** according to various embodiments of the present disclosure;

[0184] FIG. **176** is a schematic depicting an algorithm for operating a surgical instrument;

[0185] FIG. **177** is another schematic depicting an algorithm for operating a surgical instrument;

[0186] FIG. **178** is a schematic depicting an algorithm for operating a surgical instrument;

[0187] FIG. **179** is a circuit configured to indicate the voltage of a battery;

[0188] FIG. **180** is a flasher schematic configured to indicate that a battery is charged;

[0189] FIG. **181** is a schematic of a diagnostic check for use with a surgical instrument in accordance with at least one embodiment;

[0190] FIG. **182** is a schematic illustrating the discharge of a battery and a power cutoff once the charge of the battery is below a minimum charge level;

[0191] FIG. **183** is a table of information that can be maintained which records the operation and/or performance of a battery;

[0192] FIG. **184** is a schematic of a battery diagnostic circuit;

[0193] FIG. **185** is a perspective view of a sealed motor and gear assembly for use with a surgical instrument according to various embodiments of the present disclosure; and

[0194] FIG. **186** is an exploded, elevational, cross-sectional view of the sealed motor and gear assembly of FIG. **185** according to various embodiments of the present disclosure.

DETAILED DESCRIPTION

[0195] Applicant of the present application also owns the following patent applications that were filed on Aug. 23, 2013 and which are each herein incorporated by reference in their respective entireties:

[0196] U.S. patent application Ser. No. 13/974,166, entitled FIRING MEMBER RETRACTION DEVICES FOR POWERED SURGICAL INSTRUMENTS, now U.S. Pat. No. 9,700,310;

[0197] U.S. patent application Ser. No. 13/974,215, entitled SECONDARY BATTERY ARRANGEMENTS FOR POWERED SURGICAL INSTRUMENTS, now U.S. Patent Application Publication No. 2015/0053748;

[0198] U.S. patent application Ser. No. 13/974,202, entitled ERROR DETECTION ARRANGEMENTS FOR SURGICAL INSTRUMENT ASSEMBLIES, now U.S. Patent Application Publication No. 2015/0053743;

[0199] U.S. patent application Ser. No. 13/974,205, entitled ATTACHMENT PORTIONS FOR SURGICAL INSTRUMENT ASSEMBLIES, now U.S. Pat. No. 9,808,249;

[0200] U.S. patent application Ser. No. 13/974,224, entitled TAMPER PROOF CIRCUIT FOR SURGICAL INSTRUMENT BATTERY PACK, now U.S. Pat. No. 9,775,609;

[0201] U.S. patent application Ser. No. 13/974,169, entitled CLOSURE INDICATOR SYSTEMS FOR SURGICAL INSTRUMENTS, now U.S. Pat. No. 9,445,813;

[0202] U.S. patent application Ser. No. 13/974,227, entitled SHROUD RETENTION ARRANGEMENT FOR STERILIZABLE SURGICAL INSTRUMENTS, now U.S. Patent Application Publication No. 2015/0053738;

[0203] U.S. patent application Ser. No. 13/974,174, entitled CONDUCTOR ARRANGEMENTS FOR ELECTRICALLY POWERED SURGICAL INSTRUMENTS WITH ROTATABLE END EFFECTORS, now U.S. Pat. No. 9,510,828;

[0204] U.S. patent application Ser. No. 13/974,177, entitled END EFFECTOR DETECTION SYSTEMS FOR SURGICAL INSTRUMENTS, now U.S. Patent Application Publication No. 2015/0053737;

[0205] U.S. patent application Ser. No. 13/974,182, entitled FIRING TRIGGER LOCKOUT ARRANGEMENTS FOR SURGICAL INSTRUMENTS, now U.S. Patent Application Publication No. 2015/0053742;

[0206] U.S. patent application Ser. No. 13/974,208, entitled INTERACTIVE DISPLAYS, now U.S. Pat. No. 9,283,054; and

[0207] U.S. patent application Ser. No. 13/974,209, entitled MOTOR-POWERED ARTICULATABLE SURGICAL INSTRUMENTS, now U.S. Patent Application Publication No. 2015/0053744.

[0208] Certain exemplary embodiments will now be described to provide an overall understanding of the principles of the structure, function, manufacture, and use of the devices and methods disclosed herein. One or more examples of these embodiments are illustrated in the accompanying drawings. Those of ordinary skill in the art will understand that the devices and methods specifically described herein and illustrated in the accompanying drawings are non-limiting exemplary embodiments and that the scope of the various embodiments of the present invention is defined solely by the claims. The features illustrated or described in connection with one exemplary embodiment may be combined with the features of other embodiments. Such modifications and variations are intended to be included within the scope of the present invention.

[0209] The terms "comprise" (and any form of comprise, such as "comprises" and "comprising"), "have" (and any form of have, such as "has" and "having"), "include" (and any form of include, such as "includes" and "including") and "contain" (and any form of contain, such as "contains" and "containing") are open-ended linking verbs. As a result, a surgical system, device, or apparatus that "comprises," "has," "includes" or "contains" one or more elements possesses those one or more elements, but is not limited to possessing only those one or more elements. Likewise, an element of a system, device, or apparatus that "comprises," "has," "includes" or "contains" one or more features possesses those one or more features, but is not limited to possessing only those one or more features.

[0210] The terms "proximal" and "distal" are used herein with reference to a clinician manipulating the handle portion of the surgical instrument. The term "proximal" referring to the portion closest to the clinician and the term "distal" referring to the portion located away from the clinician. It will be further appreciated that, for convenience and clarity, spatial terms such as "vertical", "horizontal", "up", and "down" may be used herein with respect to the drawings. However, surgical instruments are used in many orientations and positions, and these terms are not intended to be limiting and/or absolute.

[0211] Various exemplary devices and methods are provided for performing laparoscopic and minimally invasive surgical procedures. However, the person of ordinary skill in the art will readily appreciate that the various methods and devices disclosed herein can be used in numerous surgical procedures and applications including, for example, in connection with open surgical procedures. As the present Detailed Description proceeds, those of ordinary skill in the art will further appreciate that the various instruments disclosed herein can be inserted into a body in any way, such as through a natural orifice, through an incision or puncture hole formed in tissue, etc. The working portions or end effector portions of the instruments can be inserted directly into a patient's body or can be inserted through an access device that has a working channel through which the end effector and elongated shaft of a surgical instrument can be advanced.

[0212] FIG. **1** illustrates a powered surgical instrument **10** that, in many ways, may be similar to those surgical instruments (including various features, components and subcomponents thereof) disclosed in, for example, Zemlok '763 and/or Zemlok '344, which have each been incorporated by reference herein in their respective entireties. The surgical instrument **10** depicted in FIG. **1** includes a housing **12** that has a handle portion **14** for facilitating manual manipulation and operation of the instrument. Thus, the term "housing" as used herein may encompass a handheld or otherwise hand-manipulatable arrangement. However, the term "housing" may also encompass portions of an automated surgical instrument system such as a robotically-controlled system that is not intended to be handheld but is otherwise manipulated and actuatable by various components, portions, and/or actuators of the system.

[0213] An elongated shaft assembly **16** in the form of an endoscopic portion protrudes from the housing **12** and is configured for operable attachment to a surgical end effector that is constructed to perform at least one surgical procedure in response to applications of firing motions thereto. Such surgical end effectors may comprise, for example, endocutters, graspers or other devices that may include a pair of jaws wherein one jaw is selectively movable relative to the other jaw or in some configurations, both jaws are movable relative to each other. By way of further example, the surgical end effector may comprise a device configured to cut and staple tissue such as a "loading unit" **20** as shown in FIGS. **2** and **3**. Surgical end effectors, such as loading unit **20**, for example, can be releasably attached to the elongated shaft assembly **16** of the powered surgical instrument **10**, as described in greater detail herein.

[0214] FIGS. **2** and **3** illustrate one exemplary form of a loading unit **20** that may be employed with the surgical instrument **10**. Such loading unit **20** may be similar to those loading units disclosed in the aforementioned U.S. Patent Application Publications, which have been each herein incorporated by reference in their entireties as well as those loading units disclosed in, for example, U.S. Patent Application Publication No. 2012/0298719, entitled SURGICAL STAPLING INSTRUMENTS WITH ROTATABLE STAPLE DEPLOYMENT ARRANGEMENTS, now U.S. Pat. No. 9,072,535, the disclosure of which is hereby incorporated by reference in its entirety herein.

[0215] As can be seen in FIG. **2**, the loading unit **20** includes an anvil assembly **22** that is supported for pivotal travel relative to a carrier **24** that operably supports a staple cartridge **26** therein. A mounting assembly **28** is pivotally coupled to the cartridge carrier **24** to form an articulation joint **27** that enables the carrier **24** to pivot about an articulation axis "AA-AA" that is transverse to a longitudinal tool axis "LA-LA". Referring to FIG. **3**, mounting assembly **28** may include, for example, upper and lower mounting portions **30** and **32**. Each mounting portion **30**, **32** may include a threaded bore **34** on each side thereof that is dimensioned to receive threaded bolts (not shown) for securing the proximal end of carrier **24** thereto. A pair of centrally located pivot members **36** may extend between upper and lower mounting portions via a pair of coupling members **38** which engage a distal end of a housing portion

40. Coupling members **38** may each include an interlocking proximal portion **39** that is configured to be received in grooves **42** that are formed in the proximal end of housing portion **40** to retain mounting assembly **30** and housing portion **40** in a longitudinally fixed position.

[0216] As can be further seen in FIG. **3**, housing portion **40** of loading unit **20** may include an upper housing half **44** and a lower housing half **46** that are each configured to be received within an outer casing **50**. The proximal end of housing half **44** may include engagement nubs **48** for releasably engaging a distal end of an elongated shaft assembly **16**. The nubs **48** may form a "bayonet-type" coupling with the distal end of the elongated shaft assembly **16**, for example. Various coupling arrangements are described in greater detail herein. Housing halves **44**, **46** may define a channel **47** for slidably receiving an axially-movable drive beam **60**. A second articulation link **70** may be dimensioned to be slidably positioned within a slot **72** formed between housing halves **44**, **46**. A pair of "blowout" plates **74** may be positioned adjacent the distal end of housing portion **40** adjacent the distal end of axial drive beam **60** to prevent outward bulging of the drive beam **60** during articulation of carrier **24**.

[0217] The drive beam **60** may include a distal working head **62** and a proximal engagement section **64**. Drive beam **60** may be constructed from a single sheet of material or, preferably, from multiple stacked sheets. Engagement section **64** may include a pair of engagement fingers which are dimensioned and configured to mountingly engage a pair of corresponding retention slots formed in drive member **66**. Drive member **66** may include a proximal porthole **67** that is configured to receive a distal end of a firing rod when the proximal end of loading unit **20** is engaged with elongated shaft assembly of the surgical instrument **10**. The distal working head **62** may have a tissue cutting portion **63** formed thereon. The distal working head **62** may further include a pair of pins **65** that are configured to engage the anvil assembly **22** to pivot it to a closed position to clamp tissue between the anvil **22** and the staple cartridge **26** as the distal working head **62** is distally driven through the staple cartridge **26**. A tissue cutting portion **63** on the distal working head **62** serves to cut through the clamped tissue as the surgical staples (not shown) that are supported in the staple cartridge **26** are driven into forming contact with the anvil **22** in a known manner. For example, the distal working head **62** is configured to axially engage and advance a sled (not shown) that is movably supported in the staple cartridge **26**. As the sled is driven in the distal direction by the drive member **66**, the sled contacts pushers (not shown) that are associated with the staples and causes the pushers to drive the staples out of the cartridge **26** into forming engagement with anvil **22** on the loading unit **20**.

[0218] As can be seen in FIG. **1**, the surgical instrument **10** includes a motor **100** that is configured to generate rotary actuation motions that may be employed, for example, to apply firing motions to the loading unit **20** as will be discussed in further detail below. In at least one form, for example, the motor **100** is configured to apply rotary actuation motions to a firing member assembly, generally designated as **82**. In one arrangement, for example, the firing member assembly **82** includes a drive tube **102** that is rotatably supported within the housing **12** and has an internal thread (not shown) formed therein. A proximal threaded portion of a firing rod **104** is supported in threaded engagement with the drive tube **102** such that rotation of the drive tube **102** results in the axial movement of the firing rod **104**. The firing rod **104** may threadably interface with the interior of the drive beam **60** in the loading unit **20**. As discussed in further detail in the aforementioned incorporated Zemlok '763 and Zemlok '344, rotation of drive tube **102** in a first direction (e.g., counter-clockwise) causes the firing rod **104** to advance the drive member **60** in the distal direction. Initial advancement of the drive member **60** in the distal direction within the loading unit **20** causes the anvil **22** to pivot toward the staple cartridge **26**. The anvil **22** is actuated by pins **65** on the drive member **60** which serve to cam the anvil **22** to a closed position as the drive member **60** is initially driven in the distal direction "DD". Additional distal translation of firing rod **104** and ultimately of the drive member **60** through the loading unit **20** causes the staples to be driven into forming contact with the staple forming undersurface on the anvil **22**.

[0219] As can be further seen in FIG. **1**, the surgical instrument **10** may include an articulation system generally designated as **109**. However, surgical instrument **10** may include various other articulation system arrangements disclosed in detail herein. In at least one form, the articulation system **109** may include an articulation mechanism **110** that includes an articulation motor **112** and a manual articulation knob **114**. The articulation motor **112** may be actuated by a powered articulation switch **116** or by pivoting the manual articulation knob **114**. Actuation of the articulation motor **112** serves to rotate an articulation gear **118** of the articulation mechanism **110**. Actuation of articulation mechanism **110** may cause the end effector (e.g., the cartridge/anvil portion of the loading unit **20**) to move from its first position, wherein its axis is substantially aligned with longitudinal tool axis "LA-LA" of the elongated shaft assembly **16** to a position in which the axis of the end effector is disposed at an angle relative to the longitudinal tool axis "LA-LA" of the elongated shaft assembly about, for example, articulation axis "AA-AA". Further discussion regarding various aspects of the articulation mechanism **110** may be found in Zemlok '763 which was previously incorporated by reference herein in its entirety. In addition, U.S. Pat. No. 7,431,188 entitled SURGICAL STAPLING APPARATUS WITH POWERED ARTICULATION, the entire disclosure of which is hereby incorporated by reference herein, discloses motor-powered articulatable end effectors which may be employed in connection with surgical instrument **10**.

[0220] In various embodiments, the surgical instrument can include at least one motor, which can apply firing motions to the loading unit **20** and/or articulation motions to the articulation system **109**, as described elsewhere in greater detail. The motor **100** may, for example, be powered by a power source **200** of the type described in further detail in Zemlok '763. For example, the power source **200** may comprise a rechargeable battery (e.g., lead-based, nickel-based, lithium-ion based, etc.). It is also envisioned that the power source **200** may include at least one disposable battery. The disposable battery may, for example, be between about 9 volts and about 30 volts. However, other power sources may be employed. FIG. **1** illustrates one example wherein the power source **200** includes a plurality of battery cells **202**. The number of battery cells **202** employed may depend upon the current load requirements of the instrument **10**.

[0221] In certain embodiments, the surgical instrument **10** can include a secondary power source for powering the at least one motor of the surgical instrument **10**. For example, referring now to FIG. **129**, the surgical instrument **10** may include a power system **2000** which can be configured to provide energy for operation of the surgical instrument **10**. The power system **2000**, as illustrated in FIG. **129**, can be placed, for example, in the handle portion **14** of the housing **12** and may include a primary power source **2002** and a secondary or backup power source **2004**. The primary power source **2002** can be configured to provide energy for operation of the surgical instrument **10** during normal operation and the secondary power source **2004** can be configured to provide energy for operation of the surgical instrument **10**, at least in a limited capacity, when the primary power source **2002** is not available to provide energy for the operation of the surgical instrument **10**, for example, when the primary power source **2002** is depleted, and/or when disconnected from the surgical instrument **10**. For example, the secondary power source **2002** can be configured to provide energy to restore the surgical instrument **10** to a default status in the event the primary power source **2002** is depleted and/or disconnected from the surgical instrument **10** during a surgical procedure.

[0222] Referring to FIG. **1**, as described elsewhere in greater detail, a power source such as, for example, the power source **200** can supply power for operation of the surgical instrument **10**. For example, the power source **200** can supply power for a motor such as, for example, motor **100** to cause rotation of the drive tube **102** in a first direction and ultimately the axial advancement of the firing rod **104** which drives the drive beam **60** distally through the loading unit **20**. Alternatively, the power source **200** can supply power for the motor **100** to cause rotation of the drive tube **102** in a second direction opposite the first direction and ultimately the axial retraction of the firing rod **104** which can move the drive beam **60** proximally to its starting and/or default position. Similarly, the primary power source **2002** can be configured to supply power for the motor **100** to advance and/or retract the firing rod **104** during normal operation of the surgical instrument **10**. In addition, the secondary power source **2004** can be configured to supply power needed to retract the firing rod **104** to the default position in the event the primary power source **2002** becomes unavailable to provide the needed power such as, for example, when the primary power source **2002** is depleted and/or disconnected from the surgical instrument **10**.

[0223] Further to the above, as described elsewhere in greater detail, the surgical instrument **10** can be configured to record and store a variety of information about the operation of the surgical instrument **10** during a surgical procedure such as, for example, an articulation angle of end effector **20** (See FIG. **2**), an actuation status of the end effector **20**, sensor readings, number of firings, tissue thickness, and/or position of the firing rod **104**. In certain examples, such information can be recorded and stored in a volatile or temporary memory such as, for example, a random access memory (RAM) unit which may require power to maintain the stored information. During normal operation of the surgical instrument **10**, the primary power source **2002**, similar to other power sources described elsewhere in greater detail, may supply the power needed to maintain the stored information within the volatile or temporary memory units of the surgical instrument **10**. In addition, the secondary power source **2004** can supply the power needed to temporarily maintain the stored information in the event the primary power source **2002** becomes unavailable to supply the needed power such as, for example, when the primary power source **2002** is depleted and/or disconnected from the surgical instrument **10**.

[0224] In certain aspects, the surgical instrument **10** may include a control system **2005** of the type and construction disclosed in Zemlok '763, which has been herein incorporated by reference in its entirety. Further details regarding the construction and operation of such control system **2005** may be obtained from that publication. For example, the control system **2005** may be configured to generate or provide information, such as a warning or instrument state, to a user via a user interface, such as a visual or audio display. Signals or inputs generated by the control system **2005** may be, for example, in response to other signals or inputs provided by the user, instrument components, or may be a function of one or more measurements associated with the instrument **10**. During normal operation of the surgical instrument **10**, as described elsewhere in greater detail, a power source such as, for example, the primary power source **2002** (See FIG. **129**) can supply power needed to permit the control system **2005** to perform its functions including interactions with a user through the user interface. In addition, the secondary power source **2004** can supply, in at least a limited capacity, the power needed to temporarily interact with a user through the user interface in the event the primary power source **2002** becomes unavailable to supply the needed power such as, for example, when the primary power source **2002** is depleted and/or disconnected from the surgical instrument **10**.

[0225] Referring now to FIG. **130**, the power system **2000** may comprise power management circuit **2006** which may be connected to the primary power source **2002** and the secondary power source **2004**. The power management circuit **2006** may include or may be selectively associated with a semiconductor, computer chip, or memory. The power management circuit **2006** may be configured to send or receive analog or digital inputs or signals to or from various components of the surgical instrument **10** including but not limited to the control system **2005**, the primary power source **2002**, and/or the secondary power source **2004**. In various aspects, the power management circuit **2006** may use software that may employ one or more algorithms to further formulate input signals to control and monitor various components of the surgical instrument **10** including the primary power source **2002** and/or the secondary power source **2004**. Such formulated input signals may be a function of criteria measured and/or calculated by the power management circuit **2006** or, in some instances, provided to the power management circuit **2006** by another instrument component, a user, or a separate system in operative communication with the power management circuit **2006**.

[0226] Referring again to FIG. **129**, the primary power source **2002** may comprise one or more battery cells depending on the current load needs of the instrument **10**. In various aspects, as illustrated in FIG. **129**, the primary power source **2002** may include a battery pack **2008** which may include a plurality of battery cells **2010** which may be connected in series with each other, for example. The battery pack **2008** can be replaceable. In other words, the battery pack **2008** can

be disconnected and removed from the surgical instrument **10** and replaced with another similar battery pack. In certain aspects, the primary power source **2002** may comprise a rechargeable battery (e.g., lead-based, nickel-based, lithium-ion based, etc.). The battery cells **2008** may be, for example, 3-volt lithium battery cells, such as CR 123A battery cells, although, for example, in other embodiments, different types of battery cells could be used such as battery cells with different voltage levels and/or different chemistries, for example. A user may disconnect and remove a depleted or used battery pack **2008** from the surgical instrument **10** and connect a charged battery pack **2008** to power the surgical instrument **10**. The depleted battery pack **2008** can then be charged and reused. It is also envisioned that the primary power source **2002** may include at least one disposable battery. In various aspects, the disposable battery may be between about 9 volts and about 30 volts, for example. A user may disconnect and remove a depleted disposable battery pack **2008** and connect a new disposable battery pack **2008** to power the surgical instrument **10**.

[0227] As described above, the battery pack **2008** may include rechargeable battery cells and can be removably placed within the handle portion **14** of the housing **12**, for example. In such circumstances, the battery pack **2008** can be charged using a charger base. For example, as illustrated in FIG. **131**, charger base **2012** can be connected to battery pack **2008** by removing the battery pack **2008** from its location in the handle portion **14** and connecting it to the charger base **2012**. As shown in FIG. **131**, the charger base **2012** may comprise a power source **2014** for charging the battery pack **2008**. The power source **2014** of the charger base **2012** may be, for example, a battery (or a number of series-connected batteries), or an AC/DC converter that converters AC power, such as from electrical power mains, to DC, or any other suitable power source for charging the battery pack **2008**. The charger base **2012** may also comprise indicator devices, such as LEDs, a LCD display, etc., to show the charge status of the battery pack **2008**.

[0228] In addition, as shown in FIG. **131**, the charger base **2012** may comprise one or more processors **2016**, one or more memory units **2018**, and i/o interfaces **2020**, **2022**, for example. Through the first i/o interface **2020**, the charger base **2012** may communicate with the power pack **2008** (via a power pack's i/o interface) to allow, for example, data stored in a memory of the power pack **2008** to be downloaded to the memory **2020** of the charger base **2012**. In various circumstances, the downloaded data can then be downloaded to another computer device via the second i/o interface **2022** for evaluation and analysis, such as by the hospital system in which the operation involving the instrument **10** is performed, by the office of the surgeon, by the distributor of the instrument, by the manufacturer of the instrument, etc.

[0229] The charger base **2012** may also comprise a charge meter **2024** for measuring the charge across the battery cells of the battery pack **2008**. The charge meter **2024** may be in communication with the processor **2016**, so that the processor **2016** can determine in real-time the suitability of the battery pack **2008** for use to ensure that the battery would perform as expected.

[0230] Referring again to FIG. **129**, the secondary power source **2004** may comprise one or more battery cells **2026** which can be disposed, for example, within the handle portion **14**. The battery cell **2026** can be rechargeable (e.g., lead-based, nickel-based, lithium-ion based, etc.). For example, the battery cell **2026** may be a 3-volt lithium battery cell, such as CR 123A battery cell. In addition, the battery cell **2026** can be configured to be recharged without being removed from the instrument **10**. For example, the primary power source **2002** can be utilized to charge the battery cell **2026** when the primary power source **2002** is connected to the instrument **10**.

[0231] Referring to FIG. **132**, an exemplary embodiment of the power management circuit **2006** is illustrated. Among other things, the power management circuit **2006** can be configured to monitor electrical parameters associated with the operation of the primary power source **2002** and/or the secondary power source **2004**. For example, the power management circuit **2006** can be configured to monitor power levels in the primary power source **2002** and/or the secondary power source **2004**. The power management circuit **2006**, as shown in FIG. **132**, may comprise a charge meter **2028** which may be configured to measure the charge across the primary power source **2002** and/or the secondary power source **2004**. The power management circuit **2006** also may comprise a non-volatile memory **2030**, such as flash or ROM memory, for example, and one or more processors **2032**. The processor **2032** may be connected to and may control the memory **2030**. In addition, the processor **2032** may be connected to the charge meter **2028** to read the readings of and otherwise control the charge meter **2028**. Additionally, the processor **2032** may control output devices of the power management circuit **2006** such as, for example, LEDs.

[0232] The reader will appreciate that charge meters **2024** and/or **2028** may be configured to measure voltage, charge, resistance and/or current. In certain examples, the charge meters **2024** and/or **2028** may comprise a battery capacity measurement circuit which may be configured to measure state of voltage under a predetermined load.

[0233] Further to the above, the processor **2032** can store information about the primary power source **2002** and/or the secondary power source **2004** in the memory **2030**. The information may include among other things total charge available, number of uses, and/or performance. Additionally, the information stored in the memory **2030** may comprise ID values for the primary power source **2002** that the power management circuit **2006** may read and store. Such IDs may be, for example, RFIDs that the power management circuit **2006** read via a RFID transponder **2034**. The RFID transponder **2034** may read RFIDs from the power sources that include RFID tags. The ID values may be read, stored in the memory **2030**, and compared by the processor **2032** to a list of acceptable ID values stored in the memory **2030** or another store associated with the power management circuit **2006**, to determine, for example, if the removable/replaceable primary power source **2002** associated with the read ID value is authentic and/or proper. In such circumstances, if the processor **2032** determines that the removable/replaceable component associated with the read ID value is not authentic, the power management circuit **2006** may be configured to prevent use of the instrument **10**, such as by opening a switch (not shown) that would prevent power from being delivered to the instrument **10**. Various parameters that the processor **2032** may evaluate to determine whether the component is authentic and/or proper include date code, component model/type, manufacturer, regional information, and/or previous error codes, for example.

[0234] Further to the above, the power management circuit **2006** may also comprise an i/o interface **2036** for communicating with another device, for example a computer, to permit the data stored in the memory **2030** to be downloaded to the other device for evaluation and analysis, such as by the hospital system in which the operation involving the instrument **10** is performed, by the office of the surgeon, by the distributor of the instrument, and/or by the manufacturer of the instrument, for example. The i/o interface **2036** may be, for example, a wired or wireless interface.

[0235] Referring to the block diagram illustrated in FIG. **133**, the power management circuit **2006** may selectively transmit power to the surgical instrument **10** from the primary power source **2002** and the secondary power source **2004**. For example, the processor **2032** may be programmed to permit power to be transmitted to the instrument **10** from the primary power source **2002** when the primary power source **2002** is available to power the instrument **10** and from the secondary power source **2004** when the primary power source **2002** is not available to power the instrument **10**.

[0236] During normal operation of the instrument **10**, the processor **2032** upon detection and authentication of the primary battery source **2002**, as described above, may permit the primary power source **2002** to power the instrument **10**. The primary power source **2002** may continue to power the instrument **10** until the primary power source **2002** reaches or falls bellow a predetermined minimum charge level such as, for example, when the primary power source **2002** is disconnected and/or depleted. The power management circuit **2006** could be employed to determine when the primary power source **2002** reaches or falls bellow the predetermined minimum charge level. For example, the processor **2032** can be configured to employ the charge meter **2028** or another similar charge meter to monitor the charge level of the primary power source **2002** and detect when the charge level reaches or falls below a predetermined minimum level that can be stored in the memory **2030** of the power management circuit **2006**. At such point, the processor **2032** may alert the user to replace the primary power source **2002**. The power management circuit **2006** may include an indicator, such as one or more LEDs, an LCD display, for example, that is activated to alert a user of the instrument **10** replace the primary power source **2002**. Furthermore, the processor **2032** may be configured to switch the powering of the instrument **10** from the primary power source **2002** to the secondary power source **2004** upon detecting that the charge level of the primary power source **2002** has reached or fallen below the predetermined minimum level. The reader will appreciate that additional indicators can be utilized to provide a user with additional feedback. For example, an indicator can be utilized to alert the user that instrument **10** is switching from the primary power source **2002** to the secondary power source **2004**, and vise versa.

[0237] Further to the above, the processor **2032** may be programmed to permit the primary power source **2002** to charge the secondary power source **2004** when the primary power source **2002** is connected to the surgical instrument **10**. In certain examples, the secondary power source **2004** may remain idle once fully charged by the primary power source **2002** to a predetermined maximum power level for as long as the primary power source **2002** remains available to power the instrument **10**. In addition, the power management circuit **2006** could be employed to determine when the secondary power source **2004** is sufficiently charged. For example, the processor **2032** can be configured to employ the charge meter **2028** to monitor the charge level of the secondary power source **2004** until the charge level reaches a predetermined maximum level that can be stored in the memory **2030** of the power management circuit **2006** at which point the processor **2032** may stop the primary power source **2002** from charging the secondary power source **2004**. The power management circuit **2006** may include an indicator, such as one or more LEDs, an LCD display, etc., that can be activated to alert a user of the instrument **10** when the secondary power source **2004** is sufficiently charged.

[0238] Referring again to FIG. **129**, the primary power source **2002** can be housed within a chamber **2038** of the handle portion **14** of the instrument **10**. To replace the primary power source **2002**, an outer shell of the handle portion **14** can be removed to expose the chamber **2038**. In certain examples, a trigger or a switch can be associated with the outer shell of the handle portion **14** such that attempting to remove the outer shell of the handle portion **14** may be understood by the processor **2032** as a triggering event to switch from the primary power source **2002** to the secondary power source **2004**.

[0239] Upon replacing the primary power source **2002** of the surgical instrument **10** with a new primary power source **2002**, the power management circuit **2006** may check the authenticity of new primary power source **2002**, as described above, and upon confirming such authenticity, the power management circuit **2006** may permit the new primary power source **2002** to transmit power to the instrument **10**. In addition, the primary power source **2002** may charge the secondary power source **2004**, as described above.

[0240] Surgical end effectors, such as loading unit **20** (FIGS. **2** and **3**), for example, can be operably coupled to the elongated shaft assembly **16** of the powered surgical instrument **10** (FIG. **1**). For example, referring now to FIGS. **38-58**, a surgical end effector, such as disposable loading unit (DLU) **5502**, for example, can be releasably attached to a surgical instrument, such as powered surgical instrument **10** (FIG. **1**), for example. In various embodiments, the surgical instrument can include a shaft **5520**, which can engage the DLU **5502**, for example. In various embodiments, a collar, such as rotatable collar **5580**, for example, can releasably lock the DLU **5502** relative to the shaft **5520**. Furthermore, in various embodiments, rotation of the collar **5580** can facilitate attachment and/or alignment of a firing assembly and/or an articulation assembly, as described herein.

[0241] In various embodiments, the DLU **5502** can include a distal attachment portion **5504** and the shaft **5520** can include an outer tube **5554** and a proximal attachment portion **5522**. The distal attachment portion **5504** of the DLU **5502** can receive the proximal attachment portion **5522** of the shaft **5520** when the DLU **5502** is secured to the shaft **5520** (FIG. **39**). Furthermore, the rotatable collar **5580** can be positioned around the proximal attachment portion **5522** of the shaft **5520**, such that the distal attachment portion **5504** of the DLU **5502** can also be positioned within the rotatable collar **5580**. The rotatable collar **5580** can be secured to the shaft **5502** and/or the proximal attachment portion **5504**, and, in certain embodiments, can be rotatably fixed to the proximal attachment portion **5504** of the shaft **5502**, for example. In certain embodiments, a proximal

attachment portion of the shaft **5520** can receive a distal attachment portion of the DLU **5502** when the DLU **5502** is secured to the shaft **5520**. Furthermore, in certain embodiments, a collar **5580** can be rotatably fixed to the DLU **5502**.

[0242] Referring still to FIGS. **38-58**, as the DLU **5502** moves between a non-attached position and an attached position relative to the shaft **5520** of the surgical instrument, the DLU **5502** can translate along a longitudinal axis defined by the shaft **5520**. The distal attachment portion **5504** of the DLU **5502** can be inserted into the proximal attachment portion **5522** of the shaft **5520** as the DLU **5502** moves from the non-attached position to the attached position. For example, the DLU **5502** can translate in direction A (FIG. **39**) when the DLU **5502** is moved between the non-attached position and the attached position. In certain embodiments, a groove-and-slot engagement between the distal attachment portion **5504** and the proximal attachment portion **5522** can guide the DLU **5502** along the longitudinal axis defined by the shaft **5520**. Referring primarily to FIG. **42**, the distal attachment portion **5504** can include a guide rail **5514**. Furthermore, referring primarily to FIG. **44**, the proximal attachment portion **5522** can include a guide slot **5534**. The guide slot **5534** can be dimensioned and structured to receive and guide the guide rail **5514** as the proximal attachment portion **5504** of the DLU **5502** is inserted into the distal attachment portion **5522** of the shaft **5520**. For example, the guide slot **5534** can comprise a longitudinal slot, and the guide rail **5514** can comprise a longitudinal ridge, for example. In certain embodiments, the guide slot **5534** and guide rail **5514** can prevent twisting and/or rotating of the DLU **5502** relative to the longitudinal axis defined by the shaft **5520**.

[0243] Referring primarily to FIG. **38**, the distal attachment portion **5504** can include a first alignment indicia **5510**, such as a first arrow, for example, and the shaft **5520** and/or the collar **5580** can include a second alignment indicia **5590**, such as a second arrow, for example. Alignment of the first and second alignment indicia **5510**, **5590** can align the guide rail **5514** and the guide slot **5534**, which can facilitate attachment of the distal attachment portion **5504** to the proximal attachment portion **5522**. As described herein, translation of the DLU **5502** along a longitudinal path toward the shaft **5520** can releasably lock the DLU **5502** relative to the shaft **5520**. In such embodiments, rotation of the DLU **5502** relative to the shaft **5520** may not be required to attach the DLU **5502** relative to the shaft **5520**. In fact, rotation the DLU **5502** relative to the shaft **5520** can be restrained and/or prevented by a groove-and-slot engagement between the proximal attachment portion **5522** and the distal attachment portion **5504**, as described herein. In various embodiments, the collar **5580** can rotate relative to the DLU **5502** and/or the shaft **5520** to releasably lock the DLU **5502** to the shaft **5520**. For example, as described herein, the collar **5580** can rotate from an initial orientation (FIG. **53**) toward a secondary orientation (FIG. **54**) and then return toward the initial orientation (FIG. **57**) to lock the DLU **5502** to the shaft **5520**.

[0244] Referring primarily to FIGS. **42** and **43**, the proximal portion **5504** of the DLU **5502** can include a rotation key or rib **5506**. As the DLU **5502** is moved in direction A (FIG. **39**) between a non-attached position (FIG. **38**) and an attached position (FIG. **39**), the rotation key **5506** can affect rotation of the collar **5580**. For example, the rotation key **5506** can rotate and/or bias the collar **5580** in direction B (FIG. **39**) from the initial orientation to the secondary orientation. The distal attachment portion **5504** can be inserted into the proximal attachment portion **5522** when the collar **5580** is biased into the secondary orientation. Furthermore, when the distal attachment portion **5504** is fully inserted into the proximal attachment portion **5522**, the rotation key **5506** can permit the collar **5580** to rotate in direction C (FIG. **39**) from the secondary orientation toward the initial orientation. Direction C can be opposite to direction B, for example. As described herein, when the collar **5580** returns to the initial orientation, the collar **5580** can lock the distal attachment portion **5504** relative to the proximal attachment portion **5522**. Referring still to FIGS. **42** and **43**, the rotation key **5506** can include a rotation ramp **5508** at the proximal end thereof. The rotation ramp **5508** can engage an element of the shaft **5520** to effect rotation of the rotation collar **5580**, for example.

[0245] In various embodiments, the rotation ramp **5508** can affect rotation of a firing shaft **5540** positioned within the shaft **5520**. For example, referring primarily to FIGS. **47-50**, the firing shaft **5540** can include a firing shaft rotator **5544** which can extend radially outward from the firing shaft **5540**. The rotation ramp **5508** of the rotation key **5506** can engage the firing shaft rotator **5544** when the DLU **5502** is inserted into the shaft **5520**. In various embodiments, the rotation ramp **5508** can rotate the firing shaft rotator **5544**, which can rotate the firing shaft **5540**. For example, the firing shaft **5540** and the firing shaft rotator **5544** can rotate in direction B (FIG. **54**) between a first orientation (FIG. **53**) and a second orientation (FIG. **54**). Referring still to FIGS. **47-50**, the firing shaft **5540** can be engaged with the rotatable collar **5580**. For example, the rotatable collar **5580** can include a rotator groove **5584**, which can be structured and dimensioned to receive and/or hold the firing shaft rotator **5544**. The firing shaft rotator **5544** can be held by the rotator groove **5584**, such that the rotation of the firing shaft rotator **5544** rotates the rotatable collar **5580**. In such embodiments, insertion of the DLU **5502** into the shaft **5520**, can affect rotation of the rotatable collar **5580** in direction B (FIG. **54**) via rotation of the firing shaft rotator **5544** in direction B, for example.

[0246] Referring primarily to FIGS. **44** and **45**, the proximal attachment portion **5522** can include a rotation key slot **5524**, which can receive the rotation key **5506** when the distal attachment portion **5504** is inserted into the proximal attachment portion **5522**. In various embodiments, the rotation key slot **5524** can include a clearance notch **5526** for receiving the firing shaft rotator **5544**. For example, the rotation ramp **5508** at the proximal end of the rotation key **5506** can rotate the firing shaft rotator **5544** to the second orientation and into the clearance notch **5526** (FIG. **54**). The rotation key **5506** can continue to move along the rotation key slot **5524** as the DLU **5502** is inserted into the shaft **5520**. Furthermore, when the distal end **5509** of the rotation key **5506** moves past the firing shaft rotator **5544**, the firing shaft rotator **5544** can rotate back toward the first orientation (FIG. **58**), which can corresponding rotate the rotatable collar **5580** back toward the initial orientation thereof.

[0247] In various embodiments, the rotatable collar **5580** can be biased into the initial orientation relative to the shaft **5520** and/or the proximal attachment portion **5522**. For example, a spring **5592** can bias the lock collar **5580** into the initial orientation. The spring **5592** can include a proximal end **5594** that can be secured relative to the shaft **5520**, and

a distal end **5596** that can be secured relative to the collar **5580**. For example, the proximal end **5594** of the spring **5592** can be retained in a proximal spring slot **5538** (FIG. **51**) of the shaft **5520**, and the distal end **5596** of the spring **5592** can be retained in a distal spring slot **5588** (FIG. **46**) of the rotatable collar **5580**, for example. In such embodiments, rotation of the collar **5580** can displace the distal end **5596** of the spring **5592** relative to the proximal end **5594** of the spring **5592**, which can generate a torsional force. Accordingly, the collar **5580** can resist rotation from the initial orientation to the secondary orientation, and, when the collar is rotated to the secondary orientation, the spring **5592** can bias the collar **5580** back toward the initial orientation. Because the firing shaft rotator **5544** is engaged with the collar **5580**, the spring **5592** can also bias the firing shaft **5540** toward the first orientation thereof.

[0248] In various embodiments, the rotatable collar **5580** can include a locking detent **5582** that releasably locks the DLU **5502** to the shaft **5520**. Referring primarily to FIG. **46**, the locking detent **5582** can extend radially inward from the inner perimeter of the rotatable collar **5580**. In various embodiments, the locking detent **5582** can extend into a detent slot **5536** (FIG. **44**) in the proximal attachment portion **5522**. Referring primarily to FIG. **44**, the detent slot **5536** can form a notch in the guide slot **5534**. In various embodiments, the detent slot **5536** can extend from the guide slot **5534**, and can be perpendicular or substantially perpendicular to the guide slot **5534**, for example. Further, the locking detent **5582** can move along the detent slot **5536** when the rotatable collar **5580** rotates between the initial orientation and the secondary orientation relative to the shaft **5520**.

[0249] In various embodiments, the locking detent **5582** can engage the distal attachment portion **5504** of the DLU **5502** to lock the DLU **5502** relative to the shaft **5520**. For example, referring again to FIG. **42**, the distal attachment portion **5504** can include the guide rail **5514**, which can have a lock notch **5516** defined therein. The lock notch **5516** can be structured and dimensioned to receive the locking detent **5582** of the rotatable collar **5580** when the DLU **5502** is fully inserted into the proximal attachment portion **5522**. For example, when the distal attachment portion **5504** is fully inserted into the proximal attachment portion **5522**, the lock notch **5516** of the distal attachment portion **5504** can be aligned with the detent slot **5536** of the proximal attachment portion **5522**. Accordingly, the locking detent **5582** can slide along the detent slot **5536** in the proximal attachment portion **5522** and into the lock notch **5516** in the distal attachment portion. Furthermore, the locking detent **5582** can be biased toward engagement with the lock notch **5516** by the torsion spring **5592**. For example, after the firing shaft rotator **5544** clears the distal end **5509** of the rotation key **5506**, the firing shaft **5540** can be biased back toward the first orientation and the rotatable collar **5580** can be biased back toward the initial orientation by the torsion spring **5592**. Furthermore, when the collar **5580** is rotated from the secondary orientation back to the initial orientation, the locking detent **5582** thereof can be aligned and engaged with the lock notch **5516** in the guide rail **5514**.

[0250] In various embodiments, rotation of the collar **5580** can facilitate attachment and/or alignment of a firing assembly. For example, the firing shaft **5540** can extend between a proximal end **5546** and a distal end **5542**. The proximal end **5546** can have a rotation joint, which can permit rotation of the firing shaft **5540** between the first configuration and the second configuration. Furthermore, the distal end **5542** can have a coupler for attaching a cutting element of the DLU **5502**. Rotation of the firing shaft **5540** can facilitate attachment of the cutting element. For example, as the coupler at the distal end **5542** of the firing shaft **5540** rotates, the coupler can engage and connect to the cutting element in the DLU **5502**. In certain embodiments, the coupler can include a bayonet mount, which can engage a corresponding bayonet receiver of the cutting element in the DLU **5502**. Referring primarily to FIGS. **40** and **41**, the firing assembly can further include a sleeve **5550** positioned around the firing shaft **5540** between the proximal end **5546** and the distal end **5542**, for example.

[0251] In various embodiments, when the firing shaft **5540** rotates within the shaft **5520**, the firing shaft **5540** can rotate into alignment with a firing shaft slot **5518** in the DLU **5502**. For example, the firing shaft rotator **5544** can be aligned with the firing shaft slot **5518** when the DLU **5502** is fully inserted and attached to the shaft **5520**. However, in various embodiments, when the DLU **5502** is only partially inserted into the shaft **5520**, the firing shaft rotator **5544** can be rotated, via the rotation key **5506**, out of alignment with the firing shaft slot **5518**. In other words, the firing shaft rotator **5544** can be aligned with the firing shaft slot **5514** when the firing shaft **5540** is in the first orientation, and can be misaligned with the firing shaft slot **5514** when the firing shaft **5540** rotates toward the second orientation. In such embodiments, when the DLU **5502** is only partially inserted into the shaft **5520** and/or before the DLU **5502** is releasably locked to the shaft **5520** by the rotatable collar **5580**, the firing path of the firing shaft rotator **5544** can be blocked by the distal attachment portion **5504**. Integration of the firing shaft **5540** and the collar **5580** can ensure the DLU **5502** is securely attached to the shaft **5520** before the firing shaft **5540** can fire and/or advance. For example, the surgical instrument may be unable to fire until the cutting element in the DLU **5502** is coupled to the firing shaft **5540**, and/or until the firing shaft **5540** is properly aligned within the shaft **5520**, for example.

[0252] In certain embodiments, rotation of the collar **5580** can facilitate attachment and/or alignment of an articulation assembly **5559**. Referring primarily to FIGS. **40** and **41**, the articulation assembly **5559** can include a proximal articulation bar **5560**, a distal articulation bar **5562**, and an articulation connector **5566**. Furthermore, the shaft **5520** can include a proximal articulation bar slot **5528**, and the DLU **5502** can include a distal articulation bar slot **5512**, for example. In certain embodiments, the proximal articulation bar **5560** can be aligned with the proximal articulation bar slot **5528**, and the distal articulation bar **5562** can be aligned with the distal articulation bar slot **5512**. Referring now to FIG. **46**, the articulation connector **5566** can be housed in the rotatable collar **5580**. For example, the rotatable collar **5580** can include an articulation connector slot **5586**, and the articulation connector **5566** can be moveably positioned therein.

[0253] In various embodiments, referring again to FIGS. **40** and **41**, the proximal articulation bar **5560** can have a proximal notch **5572**, and the distal articulation bar **5562** can have a distal notch **5574**. Furthermore, the articulation connector **5566** can include a proximal articulation lug **5568** and a distal articulation lug **5572**. The proximal articulation lug **5568** can be retained in the proximal notch **5572** of the

proximal articulation bar **5560**. In certain embodiments, the distal articulation lug **5570** can operably engage the distal notch **5574** of the distal articulation bar **5562**. As described herein, the rotatable collar **5580** can rotate between the initial configuration and the secondary configuration. As the collar **5580** rotates, the articulation connector **5566** housed therein can also rotate relative to the longitudinal axis defined by the shaft **5520**. In various embodiments, the proximal articulation lug **5568** of the articulation connector **5566** can remain positioned in the proximal notch **5572** of the proximal articulation bar **5560** as the articulation connector **5566** rotates. Furthermore, the distal articulation lug **5570** of the articulation connector **5566** can move into engagement with the distal notch **5574** of the distal articulation bar **5562** as the articulation connector **5566** rotates with the collar **5580** from the secondary orientation toward the initial orientation. For example, when the DLU **5502** is fully inserted into the shaft **5508**, the distal notch **5574** of the distal articulation bar **5562** can be aligned with the distal articulation lug **5568** of the articulation connector **5566**. In such embodiments, when the rotatable collar **5580** rotates back to the initial configuration, the distal articulation lug **5568** can slide into the distal notch **5574** of the distal articulation bar **5562**. When the distal articulation lug **5568** is positioned in the distal notch **5574**, the articulation assembly **5559** can be fully assembled.

[0254] Referring primarily to FIG. **45**, in various embodiments, the proximal articulation bar slot **5528** can include a first clearance **5530** and a second clearance **5532**. The proximal and distal articulation lugs **5568**, **5570** of the articulation connector **5566** can extend into the first and second clearances **5530**, **5532**, respectively. In certain embodiments, the first and second clearances **5530**, **5532** can provide a space for the proximal and distal articulation lugs **5568**, **5570** to move as the collar **5580** rotates and/or as the articulation assembly **5559** articulates, for example.

[0255] Referring now to FIGS. **51-58**, to connect the DLU **5502** to the shaft **5520** of the surgical instrument, a user can align the alignment indicia **5510** of the DLU **5502** with the alignment indicia **5590** of the shaft **5520** and/or the collar **5580** (FIG. **51**). While maintaining alignment of the alignment indicia **5510**, **5590**, the user can move the DLU **5502** relative to the shaft **5520** along the longitudinal axis defined by the shaft **5520**. The user can move the DLU **5502** along a straight or substantially straight path, and, in various embodiments, need not rotate the DLU relative to the shaft **5520**, for example. Referring primarily to FIG. **53**, the DLU **5502** can continue to translate relative to the shaft **5520**, and the guide rail **5514** of the distal attachment portion **5504** can fit into the guide slot **5534** (FIG. **44**) in the proximal attachment portion **5522** of the shaft **5520**. As the distal attachment portion **5504** moves into the proximal attachment portion **5522**, the guide slot **5534** can guide the guide rail **5514**, and can maintain alignment of the alignment indicia **5510**, **5590**, for example. In other words, the guide slot **5534** and the guide rail **5514** can prevent rotation of the DLU **5502** relative to the longitudinal axis of the shaft **5520**. Referring primarily to FIG. **52**, the proximal articulation lug **5568** of the articulation connector **5522** can extend into the first clearance **5530** and can be positioned in the proximal notch **5572** of the proximal articulation bar **5562**, and the distal articulation lug **5570** of the articulation connector **5522** can extend through the second clearance **5532**, for example.

[0256] Referring primarily to FIG. **54**, as the distal attachment portion **5504** is inserted into the proximal attachment portion **5522**, the rotation key ramp **5508** of the rotation key **5506** can abut the firing shaft rotator **5544**. The rotation key ramp **5508** can guide and/or direct the firing shaft rotator **5544** into the clearance notch **5526** extending from the rotation key slot **5524**. Furthermore, as the firing shaft rotator **5544** moves into the clearance notch **5526**, the firing shaft **5540** can rotate in the direction B. The firing shaft **5540** can rotate from the first orientation to the second orientation. Such rotation of the firing shaft **5540** can facilitate attachment of the distal end **5542** of the firing shaft **5540** with a cutting element in the DLU **5502**. Furthermore, rotation of the firing shaft rotator **5544** can rotate the collar **5580** in the direction B via the engagement between the firing shaft rotator **5544** and the firing shaft rotator groove **5584** (FIG. **46**) in the collar **5580**. The collar **5580** can rotate from the initial orientation to the secondary orientation, for example. Additionally, the locking detent **5582** can move along the detent slot **5536** in the shaft **5520** as the collar **5580** rotates. Additionally, rotation of the collar **5580** can rotate the distal end **5596** of the spring **5592** because the distal end **5596** of the spring **5592** can be retained in the distal spring slot **5588** (FIG. **46**) in the collar **5580**. Displacement of the distal end **5596** relative to the proximal end **5594** can generate a torsional springback force, which can bias the collar **5580** from the secondary orientation toward the initial orientation, for example, and can bias the firing shaft **5540** from the second orientation toward the first orientation, for example.

[0257] Referring primarily to FIG. **55**, as the collar **5580** rotates toward the secondary orientation, the proximal articulation lug **5568** can remain engaged with the proximal notch **5572** in the proximal articulation bar **5560**. Furthermore, the distal articulation lug **5570** can rotate such that the distal articulation lug **5570** provides a clearance for the distal articulation bar **5562** of the DLU **5502**. Referring to FIG. **56**, the DLU **5502** can be fully inserted into the shaft **5520** when the collar **5580** and the articulation connector **5566** positioned therein are rotated to the secondary orientation. In various embodiments, the distal articulation bar **5562** can clear the distal articulation lug **5570** of the articulation connector **5566** when the articulation connector **5566** is rotated to the secondary orientation. Furthermore, the distal articulation lug **5570** can be rotatably aligned with the distal notch **5574** in the articulation connector **5566**. Referring still to FIG. **56**, when the DLU **5502** is fully inserted into the shaft **5520**, the firing rod rotator **5544** can clear the distal end **5509** of the rotation key **5506**.

[0258] Referring now to the FIG. **57**, the firing shaft rotator **5544** can rotate in the direction C when the distal end **5509** of the rotation key **5506** passes the firing shaft rotator **5544**. For example, the firing shaft rotator **5544** can rotate in direction C from the second orientation toward the first orientation. Furthermore, rotation of the firing shaft rotator **5544** can affect rotation of the collar **5580** in the direction C from the secondary orientation toward the initial orientation. In various embodiments, the spring **5592** can bias the firing rod **5540** toward the first orientation thereof and the collar **5580** toward the initial orientation thereof. For example, the firing shaft rotator **5544** can be positioned in the firing shaft rotator groove **5584** (FIG. **46**) in the collar **5580** such that rotation of the firing shaft rotator **5544** rotates the collar **5580**. Due to the alignment of the distal articulation lug **5570** of the articulation connector **5566** and the distal notch **5574**

of the distal articulation bar **5562**, the articulation connector **5566** can rotate as the collar **5580** rotates, and the distal articulation lug **5570** can rotate into engagement with the distal notch **5574**. The articulation assembly **5559** can be assembled when the distal articulation lug **5570** engages the distal notch **5574**. Furthermore, as the firing shaft rotator **5544** rotates in direction C, the distal end **5542** of the firing shaft **5540** can rotate in direction C, which can facilitate attachment of a cutting element in the DLU **5502** to the distal end **5542** of the firing shaft **5540**.

[0259] Referring now to FIG. **58**, rotation of the collar **5580** can also rotate the locking detent **5582** of the collar **5580** into the lock notch **5516** in the guide rail **5514** of the distal attachment portion **5504**. For example, when the DLU **5502** is fully inserted into the shaft **5520**, the lock notch **5516** can be aligned with the detent slot **5536** such that the locking detent **5582** can rotate through the detent slot **5536** and into the lock notch **5516**. As described herein, the spring **5592** can bias the collar **5580** to rotate in the direction C (FIG. **57**) after the firing shaft rotator **5544** clears the distal end **5509** of the rotation key **5506**. Referring still to FIG. **58**, when the firing shaft rotator **5544** rotates in direction C, the firing shaft rotator **5544** can move into alignment with the firing shaft slot **5518** in the DLU **5502**. Alignment of the firing shaft rotator **5544** with the firing shaft slot **5518** can permit the firing shaft **5540** to be advanced distally to fire the DLU **5502**, for example.

[0260] As described herein, the rotatable collar **5580** can releasably lock the DLU **5502** relative to the shaft **5520**. Furthermore, rotation of the collar **5580** can facilitate attachment and/or alignment of the articulation assembly **5559**, as well as attachment and/or alignment of the firing shaft **5540** with a cutting element in the DLU **5502**, for example. Furthermore, rotation of the collar can also unlock the DLU **5502** from the shaft, disconnect the articulation assembly **5559**, and/or disconnect the firing shaft **5540** from the cutting element in the DLU **5502**. For example, when the collar **5580** is again rotated from the initial orientation toward the secondary orientation, the locking detent **5582** can disengage the lock notch **5516** in the distal attachment portion **5504**. Accordingly, the distal attachment portion **5504** can be withdrawn from the proximal attachment portion **5522** along the longitudinal axis defined by the shaft **5520**, for example. In various embodiments, the DLU **5502** can be unattached from the shaft **5520** without rotating the DLU **5502** relative to the shaft **5520**. However, the collar **5580** can rotate relative to the shaft **5520**, which can disconnect the distal articulation bar **5562** from the articulation connector **5566** in the collar **5580**, and can disconnect the firing shaft **5540** from the cutting element in the DLU **5502**, for example.

[0261] Referring now to FIGS. **59-62**, a disposable loading unit (DLU) or end effector **5602** can be releasably attached to a shaft **5620** of a surgical instrument. In various embodiments, a spring or a plurality of springs, for example, can bias the DLU **5602** into a locked positioned relative to the shaft **5620**. For example, the DLU **5602** can be releasably attached to the shaft **5620** by a bayonet mount, and a spring can rotate the DLU **5602** to connect the DLU **5602** to the shaft **5620** at the bayonet connection. The DLU **5602** can include a distal attachment portion **5604**, and the shaft **5620** can include a proximal attachment portion **5622**, for example. The distal attachment portion **5604** of the DLU **5602** can receive the proximal attachment portion **5622** of the shaft **5620** when the DLU **5602** is secured to the shaft **5620**. In other embodiments, a proximal attachment portion of the shaft **5620** can receive a distal attachment portion of the DLU **5602** when the DLU **5602** is secured to the shaft **5620**.

[0262] In various embodiments, the distal attachment portion **5604** of the DLU **5602** can include a detent **5606**, which can extend radially outward from a portion of the distal attachment portion **5604**. Furthermore, the detent **5606** can include a ramped surface **5608**. As described herein, the ramped surface **5608** of the detent **5606** can engage a spring, such as spring **5636***b*, for example, and can deform the spring **5636***b* when the distal attachment portion **5604** is inserted into the proximal attachment portion **5622**. Furthermore, the detent **5606** can be held by the proximal attachment portion **5622** to releasably lock the DLU **5602** to the shaft **5622**. Referring primarily to FIG. **59**, the proximal attachment portion **5622** of the shaft **5620** can define a cavity **5624**. In various embodiments, the cavity **5624** can be structured and dimensioned to receive the distal attachment portion **5604** of the DLU **5602**. Furthermore, a spring **5636***a*, **5636***b* can be positioned within the cavity **5624**. For example, a first spring **5636***a* can be positioned on a first side of the cavity **5624**, and a second spring **5636***b* can be positioned on a second side of the cavity **5624**. The springs **5636***a*, **5636***b* can be symmetrical or non-symmetrical relative to the cavity **5624**. In various embodiments, at least a portion of a spring **5636***a*, **5636***b* can extend into the cavity **5624**. For example, a leg **5637** of the second spring **5636***b* can extend into the cavity **5624**, and another leg **5637** of the second spring **5636** can be retained in the proximal attachment portion **5622**, for example.

[0263] Referring still to FIG. **59**, the proximal attachment portion **5622** can also include a lock slot **5638**, which can be defined in the cavity **5624** and/or can be accessible via the cavity **5624**, for example. The lock slot **5638** can be structured and dimensioned to receive the detent **5606**, for example. In various embodiments, the lock slot **5638** can hold the detent **5606** to releasably lock the DLU **5602** relative to the shaft **5620**. Furthermore, in various embodiments, the proximal attachment portion **5622** can include a latch **5630**. The latch **5630** can be moveable between an unlatched position (FIGS. **59** and **60**) and a latched position (FIGS. **61** and **62**). In various embodiments, the latch **5630** can be spring-loaded, and the spring **5634** can bias the latch **5630** into the latched position. For example, the latch **5630** can include a latch spring **5634**, which can bias the latch **5630** toward and/or into the latched position. The latched position can be distal to the unlatched position, for example. In certain embodiments, the latch **5630** can include a thumb grip and/or ridges **5632** to facilitate movement of the latch **5630** from the latched position to the unlatched position. For example, a user can engage the thumb grip **5632** and draw the latch **5630** proximally to unlatch the latch **5630**.

[0264] In various embodiments, the latch **5630** can operably block or at least partially block the lock slot **5638**. For example, when the latch **5630** is in the latched position (FIGS. **61** and **62**), an arm **5635** of the latch **5630** can extend over at least a portion of the lock slot **5638**. The latch **5630** can cover or partially cover the lock slot **5638**, and can prevent and/or limit access to the lock slot **5638**. In certain embodiments, the arm **5635** of the latch **5630** can prevent the detent **5606** from moving and/or sliding into the lock slot **5638**. Moreover, when the latch **5630** is in the latched

position, the latch **5630** can engage the spring **5636***a,* **5636***b.* For example, referring to FIGS. **61** and **62**, the latch **5630** can support the spring **5636***b,* such that deformation of the spring **5636***b* is limited and/or prevented. Furthermore, the latch **5630** can support the spring **5636***b* such that the cavity **5624** cannot receive the distal attachment portion **5604** of the DLU **5602**. For example, at least a portion of the spring **5636***b* can block the cavity **5624**, which can prevent complete insertion of the distal attachment portion **5604** into the proximal attachment portion **5622**. In certain embodiments, the proximal attachment portion **5622** can include a plurality of springs, which can exert a rotational force on the distal attachment portion **5604** to rotate the distal attachment portion **5604** relative to the proximal attachment portion **5622**. For example, the proximal attachment portion **5622** can include a pair of springs or more than three springs. In other embodiments, a single spring in the proximal attachment portion **5622** can seek to rotate the distal attachment portion **5604** relative to the proximal attachment portion **5622**. Additionally or alternatively, in various embodiments, the distal attachment portion **5602** of the DLU **5602** can include at least one spring, which can rotate the distal attachment portion **5602** relative to the proximal attachment portion **5622**, for example.

[0265] In various embodiments, when the latch **5630** is in the unlatched position (FIGS. **59** and **60**), the lock slot **5638** can be unblocked and/or less blocked by the arm **5635** of the latch **5630**. For example, the detent **5606** can fit past the unlatched latch **5630** to fit into the lock slot **5638**. Furthermore, the detent **5606** can be biased past the unlatched latch **5630** and into the lock slot **5638**, as described herein. Moreover, in various embodiments, when the latch **5630** is in the unlatched position, the latch **5630** can disengage the spring **5636***a,* **5636***b.* For example, the latch **5630** may not protect and/or limit deformation of the spring **5636***a,* **5636***b* when the latch **5630** is unlatched.

[0266] Referring primarily to FIG. **59**, when the latch **5630** is moved and held in a proximal and/or unlatched position, for example, the spring **5636***b* can be unsupported by the latch **5630**. In such embodiments, the DLU **5602** can be moved in the direction A such that the distal attachment portion **5604** is moved relative to the proximal attachment portion **5622**. Referring primarily to FIG. **60**, the detent **5606** of the distal attachment portion **5604** can engage the spring **5636***b,* and can compress and/or deform the spring **5636***b,* for example. In certain embodiments, the ramped surface **5608** of the detent **5606** can slide along the spring **5636***b,* and can move the free leg **5637** of the spring **5636***b.* Deformation of the spring **5636***b* can generate a springback force, which the spring **5636***b* can exert on the detent **5606**. Referring now to FIG. **61**, the springback force can affect rotation of the detent **5606**. For example, the detent **5606** can rotate in direction B into the lock slot **5638** defined in the cavity **5624**. In various embodiments, the latch spring **5634** can return the latch **5630** to the unlatched position when the user releases the latch **5630**. Furthermore, when the latch **5630** returns to the unlatched position, the arm **5635** of the latch **5630** can block or partially block the lock slot **5638**. In such embodiments, the detent **5606** of the distal attachment portion **5604** can be releasably locked relative to the proximal attachment portion **5622** when the detent **5606** is held in the lock slot **5638**. Furthermore, in certain embodiments, the latch **5630** can hold and/or support the spring **5636***b* against the detent **5606** until the latch is again moved to the unlatched position. In various embodiments, to release the DLU **5602** from the shaft **5620**, a user can again move the latch **5630** from the latched position to the unlatched position, such that the detent **5606** can be rotated out of the lock slot **5638**. In such embodiments, the rotation of the detent **5606** again compresses and/or deforms the spring **5636***b* until the distal attachment portion **5604** is withdrawn from the proximal attachment portion **5622**.

[0267] Further to the above, the surgical instrument can be configured to identify, or at least attempt to identify, the end effector that has been assembled to the surgical instrument. In certain embodiments, as described in greater detail further below, the end effector can include electrical contacts which can engage corresponding electrical contacts on the shaft of the surgical instrument when the end effector is assembled to the shaft. In such embodiments, the controller of the surgical instrument can establish a wired connection with the end effector and signal communication between the controller and the end effector can occur through the electrical contacts. As described in greater detail below, the end effector can include at least one datum stored thereon which can be accessed by the controller to identify the end effector. The at least one datum can include a bit, more than one bit, a byte, or more than one byte of information, for example. In certain other embodiments, the end effector can include a transmitter which can be in wireless signal communication with the controller of the surgical instrument. Similar to the above, the end effector can include at least one datum stored thereon which can be transmitted to the controller to identify the end effector. In such embodiments, the controller of the surgical instrument can include a receiver, or utilize a receiver, which can receive the transmission from the end effector. Such a receiver can be positioned in the shaft and/or the handle of the surgical instrument, for example.

[0268] As the reader will appreciate, an end effector which communicates wirelessly with the controller, for example, can be configured to emit a wireless signal. In various circumstances, the end effector can be configured to emit this signal once or more than once. In certain circumstances, the end effector can be prompted to emit the signal at a desired moment and/or repeatedly emit the signal in a continuous manner. In some circumstances, the end effector can include a switch which can be operated by the user of the surgical instrument before, during, and/or after the end effector of the surgical instrument is assembled to the surgical instrument. In various embodiments, the end effector switch can comprise an on/off, or power, switch which can be closed, or operated, to activate the end effector. In at least one such embodiment, the end effector can include at least one power source, such as a battery, for example, which can be utilized by the transmitter to emit the signal when the on/off switch is closed. Upon activation of the end effector, in various circumstances, the controller of the end effector can be configured to generate the signal and emit the signal via the transmitter. In some circumstances, the end effector may not emit the signal until the end effector is activated. Such an arrangement can conserve the power of the battery, for example. In certain embodiments, the surgical instrument can be placed in an operating mode where it can await the signal from the end effector before the end effector switch is actuated. In various circumstances, the surgical instrument can be in a standby, or low-power, operating mode wherein, once the signal has been received by the controller, the controller can place the surgical instrument in

a fully-powered operating mode. In some embodiments, the end effector switch can instruct an end effector controller to emit the signal to the surgical instrument controller. Such a switch may or may not comprise a power switch; however, such a switch could be selectively actuated by the user to prompt the end effector to emit the signal at a desired moment and/or continuously from a desired moment forward.

[0269] Turning now to FIG. **114**, an end effector, such as end effector **9560**, for example, can include one or more electrical contacts, such as contacts **9561**, for example, which can be utilized to activate the end effector **9560**. For instance, turning now to FIG. **112**, the shaft **9040** of the surgical instrument can include a contact bridge **9562** which can be configured to short, or electrically connect, two or more of the contacts **9561** when the end effector **9560** is assembled to the shaft **9040**. The bridge **9562** can complete a circuit including two contacts **9561**, a battery **9564**, and at least one integrated circuit **9566** defined on a printed circuit board **9565**. Once the circuit is completed, further to the above, the battery **9564** can power the integrated circuit, or circuits, **9566** and the end effector **9560** can be activated. In various circumstances, the integrated circuit, or circuits, **9566** and an antenna **9567** defined on the printed circuit board **9565** can comprise the controller and transmitter discussed above. In certain embodiments, the shaft **9040** can include a biasing member, such as a spring **9563**, for example, which can be configured to bias the bridge **9562** into contact with the electrical contacts **9561**. Prior to the bridge **9562** connecting the electrical contacts **9561** and/or after the end effector **9560** has been detached from the shaft **9040**, the circuit can be open, power from the battery **9564** may not be supplied to the integrated circuit **9566**, and/or the power supplied to the integrated circuit **9566** may be reduced, and the end effector **9560** can be in an inactivated condition. As a result of the above, in such embodiments, the assembly of the end effector can be activated as a result of assembling the end effector to the surgical instrument. In various instances, further to the above, the end effector and the surgical instrument can be constructed and arranged such that only the complete and proper assembly of the end effector to the surgical instrument will activate the end effector.

[0270] As discussed above, referring now to FIG. **111**, an end effector can be attached to the surgical instrument, indicated by step **9600**, activated, indicated by step **9602**, and then evaluated by the surgical instrument, indicated by step **9604**. When the surgical instrument is attempting evaluate a wireless signal from an activated end effector, further to the above, the surgical instrument can be configured to assess whether the signal is complete. In various embodiments, asynchronous serial communication between the end effector and the surgical instrument can be utilized to assess whether the signal received by the surgical instrument is complete. For instance, the end effector can emit a signal comprising a start bit which precedes a frame of data, such as a byte of information, for example, and/or a stop bit which follows the frame of data. In such instances, the start bit, the byte of data, and the stop bit can comprise a 10-bit character frame, or bit pattern, for example. When the controller of the surgical instrument can identify the start bit and the stop bit of a bit pattern, in such instances, the controller can assume that the byte of data, or the bits of data, received between the start bit and the stop bit is correct and/or otherwise complete. In various circumstances, the start bit and/or the stop bit can comprise a stop period before the next byte of information is transmitted and/or before the previous byte of information is communicated once again.

[0271] Further to the above, turning now to FIG. **110**, the controller of the surgical instrument can compare the bit pattern, or certain bits of the data, to determine whether the data that it has received is correct and/or otherwise complete. In various circumstances, the data can be transmitted in such a way that the controller can evaluate the data and compare the data to a bit pattern template, or templates, in which it was expecting to receive the data. For instance, such a template can be configured and arranged such that the most significant bit of data, such as the left-most bit of data, for example, comprises a 1, for example. In the event that the controller is able to identify that the most significant bit of data equals a 1, referring to step **9700** in FIG. **110**, the controller can perform a XOR operation on the data and compare the data to the bit pattern template, or templates, available to the controller, as indicated in step **9702**. An XOR operation is known and a detailed discussion of the same is not provided herein for the sake of brevity. In the event that the bit pattern received by the surgical instrument matches a bit pattern template available to the controller, the controller will have identified the end effector. Upon identifying the end effector, the controller can access stored information regarding the end effector in a memory chip accessible by the controller, for example. In the event that the controller determines that the most significant bit of data in the received bit pattern does not equal a 1, referring again to step **9700**, the controller can perform a bit shift operation. Many bit shift operations are known, such as arithmetic shifts, logic shifts, and/or circular shifts, for example, which can be utilized to eliminate bad data bits which were received prior to the desired bit pattern. In various circumstances, the leading, or left-most, **0** data bits can be eliminated, referring now to step **9704** in FIG. **110**, and the bit pattern can be shifted to the left, for example, until the leading bit is a 1. At such point, further to the above, the shifted bit pattern can be compared to the bit pattern templates in order to identify the end effector. In the event that shifted bit pattern does not match a bit pattern template, the controller can shift the bit pattern once again until the next 1 in the bit pattern becomes the leading bit and the new shifted bit pattern can be compared to the bit pattern templates. Such a shifting and comparing operation can be performed any suitable number of times until the end effector is identified and/or the surgical instrument deems that the end effector is unidentified.

[0272] As the reader will appreciate, a surgical instrument can include information regarding any suitable number of end effectors. When an end effector has been identified by the surgical instrument, further to the above, the surgical instrument can access stored information relating to the end effector. For instance, such stored information can instruct the surgical instrument as to, one, the distance in which a firing member in the end effector must be advanced to complete a firing stroke and/or, two, the maximum amount of power or torque that the motor of the surgical instrument should apply to the firing member, for example. Such information, or a set of information, may be unique to each end effector and, accordingly, identifying the end effector in some way is what allows the surgical instrument to operate in a desired manner. Without such information, the surgical

instrument may not be able to discern the stroke length required to fully utilize the end effector and/or appropriately limit the power that it applies to the firing member. In various circumstances, the surgical instrument may rely on sensors configured to detect when the firing stroke has been completed and/or whether the power being applied to the firing member is excessive. Such sensors may prevent the motor of the surgical instrument from overpowering and damaging the firing member, for example, of the end effector.

[0273] Further to the above, certain end effectors may be more robust than other end effectors and, as a result, certain end effectors may be able to withstand larger forces from the motor of the surgical instrument. Correspondingly, other end effectors may be less robust and, as a result, may be only able to withstand smaller forces from the motor. In order for the surgical instrument to determine the appropriate forces to apply to any specific end effector, further to the above, the surgical instrument must identify the end effector attached to the surgical instrument. In the event that the end effector cannot identify the end effector, the surgical instrument can utilize a default operating program, or mode. In the default operating mode, the controller of the surgical instrument may limit the power that the motor can apply to the firing member of the end effector, for example, to a minimum, or default, power. The minimum power can be selected such that the motor will not damage an end effector regardless of the end effector that is being used. In some circumstances, the parameters for utilizing the weakest, or least robust, end effector that can be used with the surgical instrument can be utilized by the default operating mode such that the surgical instrument will not overpower the end effector regardless of the end effector being used. In various instances, it is the advent of motor-powered surgical instruments that may cause an end effector to be overpowered. Stated another way, end effectors that were previously used by hand-driven surgical instruments, and essentially unbreakable by such hand-driven surgical instruments, may be easily breakable by a motor-powered surgical instrument. Moreover, such previous end effectors may not include the technology to be identified by the motor-driven surgical instruments and, as a result of the default operating program described herein, such previous end effectors may still be used even with the motor-driven surgical instruments. That said, the default operating program can also utilize other default parameters. For instance, the default operating program can utilize a minimum, or default, firing stroke length. In various instances, the default operating program can utilize the shortest stroke length of the end effector that can be used with the surgical instrument. In such instances, the firing member will not collide, or crash, with the distal end of the end effector regardless of the end effector being used.

[0274] As the reader will appreciate, a surgical instrument which includes stored information regarding the end effectors that can be used with the surgical instrument, the information available to the surgical instrument may need to be updated. For instance, if the preferred operating parameters with regard to a certain end effector change over time, the information stored within each surgical instrument may need to be updated. Furthermore, for instance, the surgical instruments may need to be updated when a new end effector is developed for use with the surgical instruments. To the extent that the surgical instrument is not updated in a timely manner, the surgical instrument may not be able to identify the end effector and, as a result, may use the default operating program described herein. In various embodiments, a surgical instrument may not include stored information regarding the end effectors, or at least certain end effectors, that can be used with the surgical instrument. In such embodiments, an end effector can include stored information, or parameters, related to the end effector. Such parameters can be accessed by and/or communicated to the surgical instrument. In various circumstances, further to the above, the assembly of an end effector to the surgical instrument can cause the end effector to emit a signal which can be received by the surgical instrument. Also similar to the above, the end effector can be prompted to emit the signal. This signal, in various circumstances, can be transmitted to the surgical instrument via a wired and/or a wireless connection. In certain embodiments, the surgical instrument can prompt the end effector to transmit the signal.

[0275] Further to the above, an end effector can include one or more parameters regarding the end effector stored therein. Such parameters can be stored on one or more memory devices, for example. In various instances, such parameters can include the desired firing speed of the firing member, the desired retraction speed of the firing member, the distance or stroke in which the firing member is to travel, the maximum torque to be applied to the firing member by the motor of the surgical instrument, and/or the maximum angle in which the end effector is to be articulated if the end effector is, in fact, an articulating end effector, for example. Certain articulating end effectors are disclosed in U.S. patent application Ser. No. 13/803,097, entitled ARTICULATABLE SURGICAL INSTRUMENT COMPRISING A FIRING DRIVE, now U.S. Pat. No. 9,687,230, the entire disclosure of which is incorporated by reference herein. With regard to the parameter related to the maximum articulation angle, the controller can utilize this parameter to limit the degree in which the articulatable portion of the end effector is articulated. In some instances, the maximum articulation angle can be 45 degrees, for example, as measured from the longitudinal axis of the surgical instrument shaft. With regard to the parameter related to the firing speed and/or the retraction speed of the firing member, for example, the parameter can communicate a desired speed for the firing member and/or a percentage or fraction of the maximum speed of the motor, for example. For instance, a value of 3 for the firing speed could communicate that the controller should operate the motor at 30% of its maximum speed, for example, when advancing the firing member. Also, for instance, a value of 5 for the retraction speed could communicate that the controller should operate the motor at 50% of its maximum speed, for example, when retracting the firing member. With regard to the parameter related to the maximum torque of the motor, for example, the parameter can communicate a maximum value of the torque and/or a percentage or fraction of the maximum torque of the motor, for example. Furthermore, with regard to the parameter related to the stroke length of the firing member, for example, the parameter can communicate the desired distance in which the firing member is to be advanced and/or retracted and/or a percentage or fraction of the maximum stroke length of the surgical instrument. For instance, a value of 60 could indicate that the firing stroke should be 60 mm, for example. In various instances, the values of the parameters can be communicated in any suitable format, including

a binary format comprising bits and/or bytes of data, for example. An exemplary embodiment of a parameter array is depicted in FIG. **110**A.

[0276] In various embodiments, further to the above, the surgical instrument can be configured to obtain the parameters from the end effector in a specific order. For instance, a signal emitted from the end effector can comprise a start bit, a first bit pattern for a first parameter, such as the maximum articulation angle, a second bit pattern for a second parameter, such as the firing speed, a third bit pattern for a third parameter, such as the retraction speed, a fourth bit pattern for a fourth parameter, such as the maximum motor torque, a fifth bit pattern for a fifth parameter, such as the stroke length, and a stop bit, for example. This is but one example. Any suitable number of parameters may be communicated as part of the signal. Furthermore, any suitable number of start bits and/or stop bits may be utilized. For instance, a start bit may precede each parameter bit pattern and/or a stop bit may follow each parameter bit pattern. As discussed above, the utilization of at least one start bit and/or at least one stop bit can facilitate the controller of the surgical instrument in analyzing whether the signal from the end effector is complete. In certain embodiments, a start bit and/or a stop bit may not be utilized. Moreover, a plurality of signals can be emitted from the end effector in order to communicate parameters of the end effector to the surgical instrument.

[0277] In various circumstances, further to the above, the controller of the surgical instrument can utilize a checksum to assess whether the signal it has received from an end effector is complete, and/or whether the signal it has received is authentic, i.e., from a recognized end effector. A checksum can comprise a value used to ensure data are stored, transmitted, and/or received without error. It can be created by calculating the binary values, for example, of data and combining the binary values together using some algorithm. For instance, the binary values of the data can be added together, although various other algorithms could be utilized. In embodiments where parameters regarding certain end effectors are stored in the surgical instrument, as discussed above, a checksum value can also be stored for each such end effector. In use, the controller of the surgical instrument can access the parameter data and the checksum value and, after computating a checksum value from the parameter data, i.e., computating a calculated checksum value, the controller can compare the calculated checksum value to the stored checksum value. In the event that the calculated checksum value equals the stored checksum value, the controller can assume that all of the data retrieved from the memory of the surgical instrument is correct. At such point, the controller can then operate the surgical instrument in accordance with the data uploaded from the memory. In the event that the calculated checksum value does not equal the stored checksum value, the controller can assume that at least one datum of the retrieved data is incorrect. In various instances, the controller can then operate the surgical instrument under the default operating program, further to the above, lockout the firing trigger of the surgical instrument, and/or otherwise communicate the event to the user of the surgical instrument, for example. In certain instances, the controller can re-attempt to upload the data from the memory of the surgical instrument and re-perform the checksum computation and comparison discussed above. In the event that the re-calculated checksum value and the stored checksum value match, the controller can then operate the surgical instrument in accordance with the data uploaded from the memory. In the event that re-calculated checksum value and the stored checksum value are not equal, the controller can then operate the surgical instrument under the default operating program, further to the above, lockout the firing trigger of the surgical instrument, and/or otherwise communicate the event to the user of the surgical instrument, for example.

[0278] In embodiments where parameters regarding an end effector is stored in the memory of the end effector, as discussed above, a checksum value can also be stored in the memory of the end effector, for example. In use, the controller of the surgical instrument can access the parameter data and the stored checksum value. In various instances, further to the above, the end effector can emit one or more signals that communicates the parameters and the checksum value to the surgical instrument. As a result of the above, the stored checksum value and the parameters can be transmitted together and, for the purposes of discussion herein, the checksum value received by the surgical instrument can be referred to as the received checksum value. Once the parameter data has been received, similar to the above, the controller can computate a checksum value from the parameter data, i.e., computate a calculated checksum value, and compare the calculated checksum value to the received checksum value. In the event that the calculated checksum value equals the received checksum value, the controller can assume that all of the parameter data retrieved from the end effector is correct. At such point, the controller can then operate the surgical instrument in accordance with the data uploaded from the end effector. In the event that the calculated checksum value does not equal the received checksum value, the controller can assume that at least one datum of the retrieved data is incorrect. In various instances, the controller can then operate the surgical instrument under the default operating program, further to the above, lockout the firing trigger of the surgical instrument, and/or otherwise communicate the event to the user of the surgical instrument, for example. Such occurrences may be more frequent when the parameter data is communicated from the end effector to the surgical instrument via one or more wireless transmissions, for example. In any event, in certain instances, the controller can re-attempt to upload the data from the end effector and re-perform the checksum computation and comparison discussed above. In the event that the re-calculated checksum value and the received checksum value match, the controller can then operate the surgical instrument in accordance with the data uploaded from the end effector. In the event that the re-calculated checksum value and the received checksum value are not equal, the controller can then, further to the above, operate the surgical instrument under the default operating program, lockout the firing trigger of the surgical instrument, and/or otherwise communicate the event to the user of the surgical instrument, for example. In various instances, as a result of the above, the surgical instrument does not need to store any information regarding the end effectors that are used to operate the surgical instrument when using the end effector. In such instances, the data regarding the parameters of an end effector, and the checksum value used to confirm the integrity of the data, can be entirely stored on the end effector. The surgical instrument can include an operating program that only requires sufficient input from the end effector in

order to use the end effector. A specific operating program for each end effector that can be used with the surgical instrument may not be required. A single operating program can be used with every end effector. As such, the surgical instrument may not need to be updated to include operating programs for additional end effectors and/or modified programs for existing end effectors, for example.

[0279] In addition to or in lieu of the wireless communication systems utilized to identify the end effector attached to the surgical instrument discussed herein, turning now to FIGS. **149-154**, a surgical instrument, in accordance with at least one embodiment, can include means for scanning and identifying an end effector. FIG. **153** illustrates a handle **11020** including a bar code reader **11022** which can be configured to scan a bar code, illustrated in FIGS. **149** and **150**, on an end effector **11060**, illustrated in FIGS. **151**, **152**, and **154**. Similar to other embodiments disclosed herein, the end effector **11060** can include a shaft portion, an anvil **11062**, and/or a staple cartridge **11064**, for example, wherein one or more portions of the end effector **11060** can include a bar code thereon. In some embodiments, the end effector **11060** can include a removable component **11063** positioned intermediate the anvil **11062** and the staple cartridge **11064** which can be removed prior to or after the end effector **11060** has been assembled to the surgical instrument. In FIG. **151**, a bar code **11065** is depicted as being positioned on the shaft portion of the end effector **11060**. In FIG. **152**, a bar code **11065** is depicted as being positioned on the removable component **11063**. In various embodiments, the handle **11020** of the surgical instrument can include a bar code reader, such as bar code reader **11024**, for example, configured to read a bar code on an end effector. For instance, referring primarily to FIG. **154**, the handle **11020** can include an internal bar code reader portion **11022** configured to read the bar code **11065** defined on the shaft of end effector **11060**. In at least one such instance, the bar code reader portion **11022** can include a trough **11026** sized and configured to receive the shaft of the end effector **11060** wherein the bar code reader **11024** can be mounted within and/or relative to an opening **11027** defined in the trough **11026** such that the bar code reader **11024** can read the bar code **11065**. As the reader will appreciate, a multitude of bar code readers and bar code protocols are known, and any suitable ones can be utilized. In some instances, a bar code can include bi-directional information which allows the bar code to be read in two different directions, for example. In some instances, a bar code can utilize multiple layers of information. In some instances, the bar code protocol can include preamble information preceding information which will identify the end effector and/or otherwise supply information to the surgical instrument which will allow the surgical instrument to operate, or operate using a specific operating program. In some instances, a bar code reader can emit one or more light beams which can contact a plurality of peaks and valleys which comprise the bar code. In some instances, the valleys of the bar code can extend into, and/or be defined within, the shaft housing of the end effector. The emitted light beams can be reflected back to the bar code reader where they can be interpreted. That said, the bar code reader **11024** of the handle **11020** is positioned and arranged within the trough **11026** such that the emitted and reflected light beams are confined, or at least substantially confined, within the bar code reader portion **11022**. In this way, the bar code reader **11024** may not accidentally or unintentionally scan a different end effector, i.e., an end effector other than the one that is going to be assembled to the surgical instrument, which may be present in the surgical suite.

[0280] In various instances, further to the above, an end effector can be passed through the bar code reader of a surgical instrument before the end effector is assembled to the surgical instrument. In various alternative embodiments, the surgical instrument can include a movable bar code reader which can be utilized to scan the bar code of the end effector after the end effector has been assembled to the surgical instrument. In any event, once the end effector has been identified, in at least some circumstances, the controller can access an operating program configured to use the identified end effector. In a way, the bar code can comprise a boot loader. In other circumstances, as outlined elsewhere herein, the bar code can supply the controller with the necessary information, or parameters, to utilize a common operating system. In some circumstances, each end effector can be identified with a serialized number such that any two end effectors, eventhough they may be the same type of end effector, may have two different bar codes thereon. In such circumstances, the controller can be configured to refuse to use an end effector that has been previously scanned by the surgical instrument. Such a system could prevent an at least partially expended end effector from being used again, for instance.

[0281] As discussed above, an end effector can be configured to communicate with a surgical instrument through a wired connection and/or a wireless connection. With regard to a wired connection, turning now to FIG. **115**, the proximal end of an end effector, such as proximal end **9969** of end effector **9960**, for example, can comprise a plurality of electrical contacts **9968** which can be placed in electrical communication with a plurality of electrical contacts **9948** arranged on and/or within a distal end **9942** of a shaft **9940** of a surgical instrument. Referring primarily to FIG. **116**, each electrical contact **9968** can include a contact element **9967** at least partially positioned within an element cavity **9965**. Each electrical contact **9968** can further include a biasing member, such as a spring **9966**, for example, positioned intermediate the contact element **9967** and an interior sidewall of the element cavity **9965**. The spring **9966** can be configured to bias the contact element radially outwardly. The contact element **9967** can comprise a stop **9964** protruding therefrom which can be movably biased into engagement with another interior sidewall of the element cavity **9965** by the spring **9966**, at least prior to the end effector **9960** being assembled to the shaft **9940**. The interaction between the stop **9964** and the sidewall of the element cavity **9965** can arrest the outward movement of the contact element **9967**. When the end effector **9960** is assembled to the shaft **9940**, the contact elements **9967** of the electrical contacts **9968** can be pushed inwardly by the shaft electrical contacts **9948** against the biasing force applied by the springs **9966**, as illustrated in FIG. **116**. In various circumstances, each pair of contacts **9948** and **9968** can complete a circuit, or communication channel **9950**. While three pairs of contacts are illustrated, any suitable number of contacts and/or communication channels could be utilized. In various embodiments, referring to FIG. **117**, shaft contacts **10048** can each comprise a movable element **10047** and a biasing spring **10046** configured to push the movable elements **10047** against the corresponding end effector contacts **10068**. In certain embodiments, turning now to FIG. **118**,

one or both of the end effector contacts and the shaft contacts can comprise a flexible portion. For instance, an end effector can comprise flexible contacts **10168** which can resiliently engage the corresponding shaft contacts **9948**.

[0282] With regard to the embodiments described above, in various circumstances, the end effector can be assembled to the shaft along a longitudinal axis. In such circumstances, referring primarily to FIG. **115**, the proximal-most end effector contact **9968** will first come into electrical contact with the distal-most shaft contact **9948**. As the reader will appreciate, the end effector **9960** has not been completely attached to the shaft **9940** when such contacts come into engagement. While such an engagement between these contacts may be temporary, i.e., until the end effector **9960** is seated deeper into the shaft **9940**, the surgical instrument controller can become confused and misinterpret one or more signals from the end effector **9960**. Similar confusion may arise as the longitudinal array of end effector contacts **9968** progressively comes into contact with the longitudinal array of shaft contacts **9948** until the end effector **9940** is fully seated. In various embodiments, the controller of the surgical instrument can be configured to ignore the signals transmitted through the contacts until the proximal-most end effector contact **9968** is engaged with the proximal-most shaft contact **9948**. Turning now to FIGS. **119** and **120**, one of the contact pairs may be different than the other contact pairs such that the controller can identify when that pair of contacts has been mated and, as a result, the end effector has been completely seated. For instance, an end effector and a shaft of a surgical instrument can include a first pair of contacts **10248***a*, **10268***a*, a second pair of contacts **10248***b*, **10268***b*, and a third pair of contacts **10248***c*, **10268***c* wherein the third pair of contacts can be different than the first pair of contacts and the second pair of contacts. When the first pair of contacts **10248***a*, **10268***a* have been mated, a contact element **10267***a* can be pushed inwardly such that a first connection portion **10263***a* of the contact element **10267***a* comes into contact with a first path portion **9951***a* of a communication path **9950***a* and a second connection portion **10264***a* of the contact element **10267***a* comes into contact with a second path portion **9952***a* of the communication path **9950***a*. In such a position of the contact element **10267***a*, the first path portion **9951***a* and the second path portion **9952***a* can both transmit a signal through the contact element **10267***a*. When the second pair of contacts **10248***b*, **10268***b* have been mated, a contact element **10267***b* can be pushed inwardly such that a first connection portion **10263***b* of the contact element **10267***b* comes into contact with a first path portion **9951***b* of a communication path **9950***b* and a second connection portion **10264***b* of the contact element **10267***b* comes into contact with a second path portion **9952***b* of the communication path **9950***b*. In such a position of the contact element **10267***b*, the first path portion **9951***b* and the second path portion **9952***b* can both transmit a signal through the contact element **10267***b*. When the third pair of contacts **10248***c*, **10268***c* have been mated, a contact element **10267***c* can be pushed inwardly such that a first connection portion **10263***c* of the contact element **10467***c* is out of contact with a first path portion **9951***c* of a communication path **9950***c* and a second connection portion **10264***c* of the contact element **10267***c* comes out of contact with a second path portion **9952***c* of the communication path **9950***c* and into contact with the first path portion **9951***c*. In such a position of the contact element **10267***a*, the first path portion **9951***c* can transmit a signal through the contact element **10267***c*. As a result of the above, the first, second, and third sets can have a specific arrangement of connectivity with their respective channel paths when the end effector has been fully seated and the controller can be configured to evaluate whether this fully-engaged arrangement is in place. For instance, when the end effector is initially inserted into the shaft, the third contact **10264***c* may initially come into contact with the first shaft contact **10248***a*. In such a position, only two path portions, i.e., **9951***a* and **9952***a*, may be able to communicate a signal from the end effector to the controller and, as a such, the controller can be configured to detect a different voltage drop across the interconnection as compared to the voltage drop that occurs when five path portions, i.e., **9951***a*, **9952***a*, **9951***b*, **9952***b*, and **9951***c*, are able to communicate the signal when the end effector is fully seated. Similarly, the end effector can be further inserted into the shaft until the third contact element **10267***c* comes into contact with the second shaft contact **10248***b* and the second contact element **10267***b* comes into contact with the first shaft contact **10248***a*. In such a position, only four path portions, i.e., **9951***a*, **9952***a*, **9951***b*, and **9952***b* may be able to communicate a signal from the end effector to the controller and, as a such, the controller can be configured to detect a different voltage drop across the interconnection as compared to the voltage drop that occurs when five path portions, i.e., **9951***a*, **9952***a*, **9951***b*, **9952***b*, and **9951***c*, are able to communicate the signal when the end effector is fully seated.

[0283] In certain instances, when an end effector is assembled to an elongate shaft of a surgical instrument, the operator can engage the drive system and/or the articulation system of the end effector to initiate closure, firing, and/or articulating of the end effector, for example. An end effector can include a first jaw, a second jaw, and one or more sensors configured to detect the position of the first jaw relative to the second jaw. Referring now to FIGS. **121-124**, an end effector **10360** can comprise a first jaw, or anvil, **10362** and a second jaw, or staple cartridge, **10364**, wherein the anvil **10362** is movable toward and away from the staple cartridge **10364**. Oftentimes, the end effector **10360** is inserted through a trocar into a patient where the end effector **10360** may not be readily visible even with the assistance of an endoscope. As a result, the user of the surgical instrument may not be able to readily assess the position of the anvil **10362** relative to the second jaw **10364**. To facilitate the use of the end effector, as mentioned above, the end effector **10360** can include a sensor for detecting the position of the anvil **10362**. In various circumstances, such a sensor can be configured to detect the gap between the anvil **10362** and the staple cartridge **10364**. Certain sensors can be configured to detect the rotational position of the anvil **10362** relative to the staple cartridge **10364**. Sensors are disclosed in U.S. patent application Ser. No. 13/800,025, entitled STAPLE CARTRIDGE TISSUE THICKNESS SENSOR SYSTEM, which was filed on Mar. 13, 2013, now U.S. Pat. No. 9,345,481, and U.S. patent application Ser. No. 13/800,067, entitled STAPLE CARTRIDGE TISSUE THICKNESS SENSOR SYSTEM, which was filed on Mar. 13, 2013, now U.S. Patent Application Publication No. 2014/0263552. The entire disclosures of U.S. patent application Ser. No. 13/800,025, entitled STAPLE CARTRIDGE TISSUE THICKNESS SENSOR SYSTEM, which was filed on Mar. 13, 2013, now U.S. Pat. No. 9,345,481, and U.S. patent application Ser. No. 13/800,067, entitled STAPLE CARTRIDGE TISSUE

THICKNESS SENSOR SYSTEM, which was filed on Mar. 13, 2013, now U.S. Patent Application Publication No. 2014/0263552, are incorporated by reference herein. Regardless of the sensor, or sensors, used, the position of the anvil **10362** can be communicated to the user of the surgical instrument through a display. Such a display can be located on the end effector **10360** and/or a shaft of the surgical instrument, such as shaft **10340**, for example. When the display is located on the end effector, the display may be viewable utilizing an endoscope, for example. In such instances, the display may be positioned on the end effector such that it is not obscured by the trocar which allowed the end effector to enter the surgical site. Stated another way, the display can be located such that it is distal with respect to the distal end of the trocar when in use. When the display is located on the shaft, the display may be positioned on the shaft such that it is not obscured by the trocar. Stated another way, the display can be located such that it is proximal with respect to the proximal end of the trocar when in use. With reference to the embodiment depicted in FIGS. **121-124**, a display **10390** is located on the shaft **10340**.

[0284] With continued reference to FIG. **121**, the anvil **10362** of the end effector **10360** is depicted in a fully-open position. In this position of the anvil **10362**, a firing member **10330** of the end effector **10360** is in a proximal position and has not yet been advanced distally. As will be discussed in greater detail below, the firing member **10330** is advanced distally to move the anvil **10362** toward the staple cartridge **10364**. The position of the firing member **10330** illustrated in FIG. **121** can represent an unfired, proximal-most position of the firing member **10300**. When the anvil **10362** is in its fully-open position, referring primarily to FIG. **125**, the anvil display **10390** may not be illuminated. As the reader will appreciate, the anvil display **10390** can depict the position of the anvil **10362** in one of several different positions. Anvil display **10390** happens to be capable of depicting five potential positions of the anvil **10362**; however, other embodiments are envisioned which can include an anvil display utilizing more than five indicators or less than five indicators. As the anvil **10362** is moved from its open position to its closed position, the display **10390** can sequentially depict the position of the anvil **10362** utilizing indicators **10391-10395**. Indicator **10391** depicts the anvil **10362** in a slightly-closed position. Indicators **10392**, **10393**, and **10394** depict the anvil **10362** in partially closed positions. Indicator **10395** depicts the anvil **10362** in a fully-closed, or parallel, position. Upon comparing FIG. **121** with FIG. **122**, the reader will appreciate that the firing member **10330** has been advanced distally to at least partially close the anvil **10362**. When the anvil **10362** is in the position depicted in FIG. **122**, the anvil position sensor can detect the new position of the anvil **10362** and the indicator **10391** of the anvil display **10390** can be illuminated, as illustrated in FIG. **126**. Upon comparing FIG. **122** with FIG. **123**, the firing member **10330** has been advanced distally to further close, although not completely close, the anvil **10362**. When the anvil **10362** is in the position depicted in FIG. **123**, the anvil position sensor can detect the new position of the anvil **10362** and the indicator **10393** can be illuminated, as illustrated in FIG. **127**. Upon further comparing FIG. **122** and FIG. **123**, the reader will appreciate that the anvil **10362** has been rotated about 10 degrees, for example, and that, if the anvil **10362** had been rotated only about 5 degrees, for example, the indicator **10392** of the anvil display **10390** would have been illuminated. Upon comparing FIG. **123** with FIG. **124**, the firing member **10330** has been advanced distally to completely close the anvil **10362**. When the anvil **10362** is in the position depicted in FIG. **124**, the anvil position sensor can detect the new position of the anvil **10362** and the indicator **10395** can be illuminated, as illustrated in FIG. **128**. Upon further comparing FIG. **123** and FIG. **124**, the reader will appreciate that the anvil **10362** has been rotated about 10 degrees, for example, and that, if the anvil **10362** had been rotated only about 5 degrees, for example, the indicator **10394** of the anvil display **10390** would have been illuminated.

[0285] Further to the above, the end effector and/or the surgical instrument can include a controller which can be configured to control the anvil display **10390**. For instance, when the end effector includes the anvil display **10390**, the controller can be positioned within the end effector. When the shaft of the surgical instrument includes the anvil display **10390**, and/or any other portion of the surgical instrument includes the anvil display **10390**, the surgical instrument can include the controller. In other instances, one of the end effector and the surgical instrument can include the anvil display **10390** while the other of the end effector and the surgical instrument can include the controller. In any event, the anvil position sensor, or sensors, can be in signal communication with the controller. The controller can be configured to interpret one or more signals from the sensor, or sensors, to determine the position of the anvil **10362**. The controller can be in communication with the anvil display **10390** in order to illuminate the indicators **10391-10395** as outlined above. In various circumstances, each indicator **10391-10395** can comprise a light emitting diode, for example. In such circumstances, each light emitting diode can be placed in electrical communication with an output channel of a microprocessor of the controller such that the controller can selectively illuminate a light emitting diode independently of the other light emitting diodes. In various instances, the controller can continuously evaluate the position of the anvil **10362** based on data from the anvil sensor and, utilizing this data, continuously update which indicator is illuminated. For instance, when the anvil **10362** is being closed or opened, the controller may track the position of the anvil **10362** and promptly display this information to the user of the surgical instrument through the indicators **10391-10395**. Such instances may provide the user with real-time, or nearly real-time, feedback as to the position of the anvil **10362**. In other instances, the controller may wait to display the position of the anvil **10362** until after the anvil **10362** has stopped moving, or at least substantially stopped moving, for a certain period of time, for example. As the reader will appreciate, the indicators **10391-10395** can represent discrete positions of the anvil **10362**; however, it is likely that the anvil **10362** may only momentarily pass through each of these discrete positions when it is closed, for example. In various circumstances, the controller may utilize an algorithm in order to decide which indicator to illuminate. For instance, the controller can apply an algorithm which determines which indicator more accurately represents the position of the anvil **10362** even though the anvil **10362** may not be aligned with any of the discrete positions that can be represented by the indicator display **10390**. In various circumstances, the controller can illuminate two adjacent indicators in the indicator display **10390** when the anvil **10362**

is positioned intermediate the two discrete positions represented by the two adjacent indicators.

[0286] In various instances, further to the above, the indicators **10391-10395** can each comprise a light emitting diode which emits the same color light, or at least substantially the same color light. In other instances, one or more of the indicators **10391-10395** can emit a color which is different than the other indicators **10391-10395**. For instance, indicator **10391** could be configured to emit a yellow color while indicators **10392-10395** can be configured to emit a green color, for example. As the reader will appreciate, referring to FIG. **122**, the tissue T positioned between the anvil **10362** and the cartridge **10364** may not be adequately clamped by the anvil **10362** when the anvil **10362** is in the partially-closed position illustrated in FIG. **122** and, when the indicator **10391** associated with this position of the anvil **10362** is illuminated yellow, the user of the surgical instrument may be reminded to take caution before moving the end effector **10360** and/or continuing the firing process. In some instances, one or more of the indicators **10361-10365** can each be configured to emit more than one color. For instance, each indicator **10361-10365** can comprise a light emitting diode configured to emit a green color and a red color. In such instances, the indicators **10361-10365** can emit a green color when indicating the position of the anvil **10362** as outlined above or, alternatively, emit a red color when an error exists with the end effector **10360** and/or the surgical instrument.

[0287] As discussed above, an anvil of an end effector can be movable relative to a staple cartridge between an open position and a closed position and the surgical instrument system can be configured to detect the movement of the anvil and communicate the movement of the anvil to the user. That said, embodiments are envisioned in which the staple cartridge is movable relative to the anvil. In at least one such embodiment, the anvil may be fixed or non-pivotable. When fixed or non-pivotable, the anvil may extend rigidly from a portion of the end effector frame; however, that portion of the end effector frame, the anvil extending therefrom, and the staple cartridge may be articulatable relative to another portion of the end effector or the shaft of the surgical instrument. Whether or not the end effector is articulatable, in such embodiments, the staple cartridge can be pivotable relative to the anvil. The systems and methods described herein for detecting the movement of the anvil can be adapted to detecting the movement of the staple cartridge. Moreover, the systems and methods described herein for displaying the movement of the anvil can be adapted to displaying the movement of the staple cartridge.

[0288] In various instances, an operator may desire to retract the drive member during a firing stroke. The surgical instrument disclosed in Zemlok '763 employs a retraction assembly that comprises a manually-driven mechanical interface with the drive tube that is activated by ratcheting a retraction lever mounted on the handle. Such arrangement purports to enable the clinician to retract the firing rod and ultimately the loading unit drive member should the power source become interrupted or the motor or control system fail during firing. However, such retraction assembly can be difficult to effectively operate due to the fact that the motor and the motor gear box remained engaged during the ratcheting (activation) process. Thus, the retraction assembly of that device must be able to develop enough torque to rotate the gears in the gear box and motor shaft to enable the drive tube to be manually rotated. The generation of such forces may place extreme stress on the retraction assembly components which may lead to catastrophic failure of the retraction assembly. The surgical instruments **10** depicted in FIGS. **1-28** may be configured with unique and novel retraction assembly arrangements which may avoid this problem and others.

[0289] For example, the surgical instrument **10** may include a retraction assembly **120** that includes a retraction chassis **124** that has a top portion **126** and a bottom portion **128**. In various forms, the retraction assembly **120** interfaces mechanically with the drive tube **102** via a drive gear **130** and a retraction gear **132**. See FIG. **5**. The drive gear **130** is non-rotatably attached to the drive tube **102** such that rotation of the drive gear **130** imparts rotation on the drive tube **102**. The drive gear **130** and the retraction gear **132** may comprise bevel gears or the like to permit intermeshing engagement therebetween as shown in FIG. **5**. The retraction gear **132** may be coupled to a first spindle **134** (FIGS. **4** and **5**) which is substantially perpendicular to the top and bottom portions **126** and **128** of the retraction chassis **124** and extends therebetween. The spindle **134** may be supported for rotational travel about a spindle axis "SA-SA" that is substantially perpendicular to the longitudinal axis "LA-LA" of the surgical instrument **10**. See FIG. **5**. In various forms, the retraction gear **132** may have a first spur gear **136** attached thereto. The first spur gear **136** interfaces with a second spur gear **138** that is operably supported on a second spindle **137** which is also disposed in a substantially perpendicular manner between the top and bottom portions **126** and **128** of the retraction chassis **124** and is rotatable around a second shaft axis "SA'-SA'" defined thereby. The second spur gear **138** is supported for meshing engagement with a third spur gear **140** which is disposed on the first spindle **134**. The third spur gear **140** is attached to a first clutch portion **144** of a unidirectional clutch assembly **142**. The clutch assembly **142** further includes a second clutch portion **146** that is rotatably disposed on the first spindle **134** above the first clutch portion **144**. A spring or springs (not shown) may be disposed between the first and second clutch portions **144** and **146** thereby maintaining the first and second clutch portions **144** and **146** in a raised "non-interlocking" orientation as illustrated in FIG. **5**.

[0290] It will be appreciated that as the drive tube **102** is rotated, the drive gear **130** will impart rotation to the first, second and third spur gears **136**, **138**, **140** as well as to the first clutch portion **144** and the respective spindles **134**, **137**. Because the second clutch portion **146** can rotate about the spindle **134** and is biased out of engagement with the first clutch portion **144** by the spring arrangement disposed therebetween (not shown), the rotation of the first clutch portion **144** is not translated to the second clutch portion **146**. As can be seen in FIG. **5**, the first and second clutch portions **144** and **146** include a plurality of interlocking teeth **148** that each have a flat interlocking surface and a sloping slip surface. As will be discussed in further detail below, the second clutch portion **146** may be biased into meshing engagement with the first clutch portion **144** by the retraction lever **150**. The slip surfaces on the teeth **148** allow for the interlocking surfaces to come in contact with each such that rotation of the second clutch portion **146** causes the first clutch portion **144** to rotate. Rotation of the first clutch portion **144** also causes all of the interfacing gears to rotate

as well to ultimately impart rotational motion to the drive tube **102** about the longitudinal tool axis LA-LA.

[0291] Referring now to FIG. **6**, the retraction lever **150** may include an elongated handle portion **152** that includes a camming portion **154**. The camming portion **154** may include an opening which may house a unidirectional needle clutch (not shown) which is supported in mechanical cooperation with a fitting (not shown) that may be attached to the first spindle **134** to enable the retraction lever **150** to rotate about the first spindle **134**. Zemlok '763 further describes an operation of such a unidirectional needle clutch and fitting arrangement and was incorporated by reference herein in its entirety. In various forms, the retraction lever **150** includes a one or more camming members **156** that each have a camming surface **158** thereon. In a first orientation, the retraction lever **150** is disposed along a lever pocket **14** of the housing **12** as shown in FIG. **1**. The spring disposed between the first and second clutch portions **144**, **146** serves to bias the retraction lever **150** against the top portion **126** of the retraction chassis **124**. As can be seen in FIG. **6**, the camming members **156** are disposed within corresponding cam slots or pockets **160** in the top portion **126** of the retraction chassis **124**. The retraction lever **150** is maintained in a first orientation by a return spring **162** that is mounted between the top portion **126** of the retraction chassis **124** and the camming portion **154** of the retraction lever **150**. The camming members **156** and the cam slots **160** prevent further rotation of the retraction lever **150**.

[0292] In use, when the retraction lever **150** is moved out of the lever pocket **14** (FIG. **1**) in the housing **12**, the camming members **156** interface with the corresponding cam slots **160** to bias the camming portion **154** of the retraction lever **150** in a downward direction against the biasing force of the spring(s) positioned between the first and second clutch portions **144**, **146**. Such downward movement compresses the spring(s) and pushes the first and second clutch portions **144**, **146** into interlocking engagement. Rotation of the camming portion **154** in a counter-clockwise direction actuates the needle clutch which interfaces with the fitting and the first spindle **134**. Continual actuation of the retraction lever **150** rotates the clutch assembly **142** which in turn rotates the spur gears **136**, **138**, **140** and the retraction and drive gears **132** and **130**. This in turn rotates drive tube **102** about the longitudinal tool axis "LA-LA". Because the firing rod **104** is in threaded engagement with the drive tube **102**, rotation of the drive tube **102** in the above-described manner results in the retraction (or proximal axial travel) of the firing rod **104** into the drive tube **102**.

[0293] In operation, the drive tube **102** may be configured to be rotated in a direction that is opposite to the retraction direction (e.g., in a clockwise direction, for example) about the longitudinal tool axis" LA-LA" by the motor **100**. Such rotation of the drive tube **102** causes the firing rod **104** to move axially in the distal direction "DD". This advancement of the firing rod **104** and the drive member **60** of the loading unit **20** may be referred to herein as a "firing" action. As can be seen in FIG. **5**, for example, a gear assembly **170** is employed to establish an amount of driving torque required to drive the firing rod **104** in the distal direction "DD" to actuate the loading unit **20**. The gear assembly **170** may include a gear box housing **172** that is coupled to the motor **100**. For example, the gear box housing **172** may be coupled to the motor housing **101** by screws **103** or other mechanical fasteners and/or fastener arrangements. The gear assembly **170** and motor **100** may be collectively referred to as "drive unit", generally designated as **186**.

[0294] The gear box housing **172** may be rotatably supported in a motor retainer portion **190** that is integrally formed or otherwise non-rotatably supported by the housing **12**. Such arrangement permits the drive unit **186** to rotate within the housing **12** about the longitudinal tool axis "LA-LA", but prevents axial movement thereof within the housing **12**. The motor **100** may, for example, be powered by the power source **200** of the type described in further detail in Zemlok '763 and/or the power system **2000** (FIG. **129**).

[0295] To facilitate supply of electrical current to the drive unit **180** and, more particularly, to the motor **100**, a unique contact arrangement **210** may be employed. For example, the contact arrangement **210** may include an annular negative motor contact **212** and an annular positive motor contact **114** supported on the motor housing **101** as can be seen in FIG. **4**. A fixed negative contact **216** may be supported within the housing **12** for sliding contact with the negative motor contact **112**. Similarly a fixed positive contact **218** may be supported for sliding contact with the positive motor contact **214** as the drive unit **180** rotates within the housing **12**. The fixed negative and positive contacts **216**, **218** may comprise flexible spring-like contacts to facilitate assembly and adjustment of the drive unit **186** within the housing **12**. The fixed negative contact **216** may be electrically coupled to the power source **200** by a negative lead **220** and the fixed positive contact **218** may be electrically coupled to the power source **200** by a positive lead **222**. Such contact arrangement enables electrical power to be supplied from the power source **200** to the motor **100** while facilitating rotation of the drive unit **186** within the handle housing about the longitudinal tool axis "LA-LA".

[0296] Referring to FIG. **5**, the gear assembly **170** may comprise a planetary gear arrangement that is operably coupled to the motor shaft **107**. In one arrangement for example, a ring gear **173** may be formed on the inner surface of the gear box housing **172**. A primary sun gear **171** may be coupled to the motor shaft **107**. The primary sun gear **171** may be supported in meshing engagement with a plurality of first planetary gears **175** that are supported on a first planetary gear carrier **174** such that they are also in meshing engagement with the ring gear **173**. A first sun gear **176** may be formed on or otherwise attached to the first planetary gear carrier **174** and may be supported in meshing engagement with a plurality of second planetary gears **178** that are supported on a second planetary gear carrier **177**. The second planetary gears **178** may also be supported in meshing engagement with the ring gear **173**. A second sun gear **179** may be formed on or otherwise attached to the second planetary gear carrier **177** and may be supported in meshing engagement with a plurality of third planetary gears **181**. The third planetary gears **181** may be supported on a third planetary gear carrier **180** in meshing engagement with the ring gear **173**. A third sun gear **183** may be formed on or is otherwise attached to the third planetary gear carrier **180** and is in meshing engagement with a plurality of fourth planetary gears **187** that may be attached to an output shaft unit **184** that is rotatably supported within the gear box housing **172** by a bearing **185**. The fourth planetary gears **187** may also be supported in meshing engagement with the ring gear **173**.

[0297] FIG. **7** illustrates one arrangement for rotatably supporting the drive unit **186** within the housing **12**. As can be seen in that Figure, a motor mount boss **192** of the motor retainer **190** may include a gear box housing segment **196** that is rotatably supported therein. In one arrangement, for example, the gear assembly **170** is rotatably supported in the gear box housing segment **196** by bearing **185**. Similarly, the motor **100** is rotatably supported within a motor mount housing portion **13** by a bearing **198**. Other methods of rotatably supporting the drive unit **186** within the housing **12** may also be employed.

[0298] The output shaft unit **184** may be operably coupled to a clutch **230** (FIG. **5**) of the type and construction disclosed in Zemlok '763 which has been herein incorporated by reference in its entirety. Further details regarding the construction and operation of such clutch **230** may be obtained from that publication. In an alternative embodiment, however, the clutch **230** may be replaced with a shaft-to-shaft coupler or sleeve arrangement that serves to facilitate the coupling of the output shaft unit **184** directly to the drive tube **102**.

[0299] When the axially movable drive beam of the surgical instrument disclosed in Zemlok '763 became jammed or power was lost to the instrument, the user had to employ the retraction assembly to retract the drive beam back to a starting position to facilitate removal of the loading unit. However, effective retraction was difficult because the retraction system had to generate a sufficient amount of torque necessary to reverse the plurality of gear arrangements in the gear assembly. Thus, such retraction system could be extremely difficult to operate effectively.

[0300] At least one surgical instrument embodiment disclosed herein employs a unique and novel releasable drive unit locking system, generally designated as **240**, to address such problem. As will be discussed in further detail below, for example, when the releasable drive unit locking system **240** is in a "locked" position, the drive unit **186** is prevented from rotating within the handle housing **12**. The drive unit **186** is retained in the locked position when the surgical instrument is "fired" to facilitate transfer of the motor torque from the motor **100** through the gear assembly **170** and ultimately to the drive tube **102**. When it is desirable to activate the retraction assembly **120**, the drive unit locking system **240** is moved to an "unlocked" position to enable the drive unit **186** to freely rotate within the housing **12** to thereby avoid the need to generate sufficient retraction torque to reverse the gear arrangements in the gear assembly **170**. The gear assembly **170** can remain operably coupled between the motor **100** and the drive tube **102** during operation of the retraction assembly **120**. In such embodiments, though the gear assembly **170** remains operably coupled to the motor **100** and the drive tube **102**, free rotation of the drive unit **186** can reduce the torque required to drive the gear assembly **170** as the gear arrangements reverse to retract the drive tube **102**. Such a reduction in required torque can improve the effectiveness of the retraction system.

[0301] As can be seen in FIG. **8** for example, the third spur gear **140** of the retraction assembly **120** may include an unlocking cam **141** that is configured to actuate a locking pawl assembly **250** of the drive unit locking system **240**. One form of locking pawl assembly **250** is illustrated in FIGS. **9-11**. As can be seen in FIG. **10** for example, the locking pawl assembly **250** may include a pawl member **252** that has a locking notch **254** formed therein. The locking notch **254** is sized to permit a series of spaced, first lock wedges **256** formed around the outer circumference of the gear box housing **172** to freely pass therethrough. See, e.g., FIGS. **12** and **13**. A pawl lock wedge **258** is formed on the locking pawl **252** for locking engagement with any of the first lock wedges **256** as will be discussed in further detail below. As can also be seen in FIGS. **8-11**, the locking pawl assembly **250** may further include a pawl guide rod **260** that is configured to be slidably received within a passage **194** in the motor mount boss **192**. A pawl spring **262** is journaled on the pawl guide rod **260** and is positioned between the pawl member **252** and the motor mount boss **192** to bias a cam engagement portion **264** of the pawl member **252** into engagement with the third spur gear **140**.

[0302] One method of operating the retraction assembly **120** and the drive unit locking system **240** will now be described with reference to FIGS. **8**, **13** and **14**. FIG. **13** illustrates the drive unit locking system **240** in the locked position. As can be seen in that Figure, the pawl member **252** is biased into the distal locking position by the pawl spring **262**. When in that locked position, the pawl lock wedge **258** on the pawl member **252** is in locking engagement with a corresponding one of the first locking wedges **256** on the gear box housing **172**. When in that position, the retraction assembly **120** has not been activated and the gear assembly **170** is prevented from rotating within the housing **12**. Operation of the motor **100** by depressing the main power switch **80** (FIG. **1**) results in the rotation of the drive tube **102** and ultimately the axial advancement of the firing rod **104** which drives the drive beam **60** distally through the loading unit **20**.

[0303] If, for example, the drive beam **60** becomes jammed in the tissue clamped in the loading unit **20** or power is lost to the motor **100** or for some other reason the motor **100** is unable to reverse the rotation of the drive tube **102** to ultimately retract the firing rod **104**, the clinician may employ the retraction assembly **120** to manually retract the firing rod **104** and drive beam **60**. FIG. **8** illustrates the retraction assembly **120** in the unactuated position (e.g., when the drive unit locking system **240** is in the locked position). To commence the manual retraction process, the clinician pulls the retraction lever **150** out of the lever pocket **14** in the handle housing **12** (in the "R" direction—see FIG. **6**). Movement of the retraction lever **150** in the "R" direction results in the rotation of the camming portion **154** of the retraction lever **150** within the retraction chassis **124**. Such initial rotation of the retraction lever **150** in the "R" direction causes the unlocking cam **141** to engage the cam engagement portion **264** of the pawl member **252** to bias the pawl member **252** to the unlocked position thereby enabling the drive unit **186** to freely rotate within the handle housing **12**. The cam slots **160** in the retraction chassis are located and have a sufficient length to facilitate this rotational travel of the camming portion **154** of the retraction lever **150** without initially disengaging the clutch assembly **142**. Thus, the cam slots **160** may be longer than the cam slots located in prior retraction chassis arrangements to facilitate the unlocking of the drive unit assembly **186** prior to applying the actuation motions which result in the rotation of the drive tube **102**. For example, in at least one arrangement, the cam slots **160** may be elongated to facilitate rotation of the retraction lever **150** approximately fifteen degrees. As the clinician continues to rotate the retraction lever **150** in the "R" direction, the

cam engagement portion **264** will ride along the outer circumference of the unlocking cam **141** on the third spur gear **140**. Continued rotation of the retraction lever **150** in the "R" direction results in the engagement of the camming members **156** on the camming portion **154** with the ends of their respective cam slots **160** to bias the camming portion **154** in the downward direction. This downward movement compresses the spring(s) positioned between the first and second clutch portions **144** and **146** to bring the teeth **148** thereon into meshing engagement with each other. Continued rotation of the camming portion **154** in a counterclockwise direction may actuate the needle clutch which interfaces with the fitting and the first spindle. Continual actuation of the retraction lever **150** rotates the clutch assembly **142** which in turn rotates the spur gears **136**, **138**, **140** and the retraction and drive gears **132** and **130**. This in turn rotates drive tube **102** and retracts the firing rod **104**.

[0304] The retraction lever **150** can be actuated for a predetermined amount of travel until a portion of the retraction lever **150** abuts a portion of the housing **12**. Thereafter, the retraction lever **150** is returned to its first position by the return spring **162**. This action raises the camming portion **152** allowing the second clutch portion **146** to also move upward and disengage the first clutch portion **144**. The needle clutch may release the fitting to thereby allow the retraction lever **150** to return to the first position without affecting the movement of the drive tube **102**. Once the retraction lever **150** is returned to the first position, the drive unit **186** is once again retained in a locked position. The ratcheting or rotation of the retraction lever **150** may be repeated over and over until the firing rod **104** has been returned to a desired position.

[0305] Because the gear box housing **172** is free to rotate during the application of this rotational motion, the amount of torque required to rotate the drive tube **102** and the gears within the gear assembly **170** is greatly reduced as compared to the torque required to operate prior retraction assemblies. Such arrangement also advantageously serves to prevent the transfer of the torque forces generated by the retraction assembly to the motor shaft **107** while the gear assembly **170** remains drivingly coupled to the motor shaft **107**. In other words, the gear assembly **170** can remain drivingly coupled between the motor shaft **107** and the drive tube **102** during operation of the retraction assembly **120**. Such arrangement differs from retraction arrangements disclosed in, for example, U.S. Pat. No. 7,959,050, which is incorporated by reference in its entirety herein, but which result in the physical decoupling or physical interruption of portions of the transmission during activation of the retraction system.

[0306] FIGS. **15-18** illustrate another surgical instrument **310** that is substantially similar to surgical instrument **10** described above, except for the differences discussed below. As can be seen in FIG. **16**, the instrument **310** includes a gear assembly **470** that comprises a gear box housing **472** that may be coupled to the motor **100** in the manner described above, for example. The gear box assembly **470** and motor **100** may be collectively referred to as "drive unit", generally designated as **486**. The gear assembly **470** may be identical to gear assembly **170** described above except for the differences discussed below.

[0307] In at least one arrangement, the gear box housing **472** may be non-rotatably supported in or integrally formed with a motor retainer portion **190** that is integrally formed or otherwise non-rotatably attached within the housing **12** in the various manners discussed herein. Because the drive unit **486** does not rotate in this arrangement, it may be directly wired to the power source. For example, the motor **100** may be powered in the manner described in Zemlok '763 or other suitable manners. As can be seen in FIG. **16**, the gear assembly **470** may comprise a planetary gear arrangement that is operably coupled to the motor shaft **107**. In one arrangement for example, a fixed ring gear **473** may be formed on the inner surface of the gear box housing **472**. A primary sun gear **471** may be attached to the motor shaft **107**. The primary sun gear **471** may be supported in meshing engagement with a plurality of first planetary gears **475** that are supported on a first planetary gear carrier **474**. The first planetary gears **475** may also be in meshing engagement with the fixed ring gear **473**. A first sun gear **476** may be formed on the first planetary gear carrier **474** and be in meshing engagement with a plurality of second planetary gears **478** that are supported on a second planetary gear carrier **477**. The second planetary gears **478** may also be supported in meshing engagement with the fixed ring gear **473**. A second sun gear **479** may be formed on or attached to the second planetary gear carrier **477** and be supported in meshing engagement with a plurality of third planetary gears **481** supported on a third planetary gear carrier **480**. The third planetary gears **481** are in meshing engagement with the fixed ring gear **473**. A third sun gear **483** may be formed on or otherwise be attached to the third planetary gear carrier **480**. The third sun gear **483** may be supported in meshing engagement with a plurality of fourth planetary gears **487** that are attached to an output shaft unit **484** that is rotatably supported within the gear box housing **472** by a bearing **185**. The plurality of fourth planetary gears **487** may be in meshing engagement with a lockable ring gear **485** that is rotatably mounted in the gear box housing **472**. The gears **471**, **473**, **475**, **476**, **478**, **479**, **481** and **483** may be collectively referred to herein as gear train assembly **460**.

[0308] The lockable ring gear **485** may be rotatably mounted within an annular cavity **490** in the motor retainer portion **190** (FIG. **16**). Cavity **490** is sized to permit the free rotation of the lockable ring gear **485** therein about the longitudinal tool axis "LA-LA". The lockable ring gear **485** may be installed in the annular passage **490** and then retained in position by a plug member **492** that is pressed into or otherwise retained in the annular passage **490**.

[0309] The surgical instrument **310** may further include a drive unit locking system **540** that includes a movable shift ring assembly **542**. In at least one form, the shift ring assembly **542** may include, for example, a shift ring **543** that has at least one, and preferably a plurality of, locking members in the form of, for example, pins **544**. Pins **544** protrude from the shift ring **543** and are configured for selective locking engagement with the lockable ring gear **485**. Each of the locking pins **544** may be slidably received within a corresponding passage **546** in the plug member **492**. The shift ring **542** is supported for axial movement by a reversing link **550** that is attached to a clutch clamp **560**. As can be seen in FIG. **15**, the clutch clamp **560** may comprise a spring clamp that is clamped about a portion of the outer circumference of the third spur gear **140**. The clutch clamp **560** may have a lug **562** thereon that is attached to a shifter rod **564**. The shifter rod **564** may be somewhat flexible and be pivotally coupled to the shift ring **542**. During normal use (i.e., when the motor **100** is driving the firing rod **104**), the locking pins **544** are in locking engagement with the lock-

able ring gear **475** to prevent the lockable ring gear **475** from rotating such that the rotational torque is transferred to the output shaft unit **484** and ultimately to the drive tube **102**.

[0310] When the clinician desires to employ the retraction assembly **120** to retract the firing rod **104**, the retraction lever **150** is rotated from the starting position shown in FIG. **15** in "R" direction. As the retraction lever **150** is rotated, the clutch clamp **560** rotates with the third spur gear **140** to thereby cause the shifter rod **564** to move the shift ring **542** in the distal direction "DD". As the shift ring **542** moves in the distal direction "DD", the locking pins **544** move out of locking engagement with the lockable ring gear **485** to permit the lockable ring gear **485** to rotate relative to the gear box housing **472**. The clinician continues to ratchet the retraction lever **150** to the end position shown in FIG. **18**. In at least one arrangement for example, the retraction lever **150** need only be rotated approximately fifteen degrees to disengage the locking pins **544** from the lockable ring gear **485**. After the clinician releases the retraction lever **150**, the return spring **162** will return the retraction lever **150** to the starting position and the clinician can repeat the procedure until the firing rod **104** is retracted to a desired position. Because the lockable ring gear **485** is free to rotate within the bearing housing **472**, rotation of the drive tube **102** and the output shaft unit **484** will not be resisted by the other gear arrangements in the gear assembly **470**. As such, the amount of ratcheting torque required to retract the firing rod **104** is reduced when compared to retraction arrangements that remain operably engaged with the gear arrangements in the gear assembly during the retraction process. Furthermore, though the required torque is reduced, the firing rod **104** can remain operably engaged with the gear assembly **470**. In other words, the firing rod **104** can remain operably coupled to the motor **100**. When the shift ring **542** contacts the bearing **185** in the motor mount boss **192**, the locking pins **544** lockingly engage the lockable ring gear **485**. The clutch clamp **560** may be configured to slip relative to the third spur gear **140** after the shift ring contacts the bearing **185** or other portion of motor mounting boss **192**. Thus, the drive unit locking system **540** serves to facilitate rotation of at least a portion of the drive unit within the handle housing during the application of retraction motions to the drive tube **102** to reduce the amount of retraction torque required to retract the firing rod **104**.

[0311] The surgical instrument **610** in FIG. **19** is substantially identical to the surgical instrument **310** except that the clutch clamp **560** is attached to the third spur gear **140** in such a way as to eliminate the reversing link **550** employed in the surgical instrument **310**. As can be seen in FIG. **18** for example, the shifter rod **564** is directly connected to the shift ring **542**. Ratcheting of the retraction lever **150** in the above-mentioned manner results in the movement of the shift ring **542** and the engagement and disengagement of the locking pins **544** with the lockable ring gear **485**.

[0312] FIGS. **20** and **21** illustrates another surgical instrument **610'** that is substantially identical to surgical instrument **610** except for the following differences. In this arrangement, for example, at least two "leaf-type" lock springs **620** and ring gear lock members **622** are supported on the gear box housing **472'** of the gear assembly **470'**. As can be seen in FIG. **20**, each lock spring **620** and corresponding lock member **622** is supported in a slot **624** in the gear box housing **472'**. In this arrangement, the locking pins **544'** that are attached to the shift ring **542** are configured to contact and depress the corresponding locking spring **620** inwardly to press the corresponding ring gear lock member **622** into locking engagement with the lockable ring gear **485**. When in that position (shown in FIG. **20**), the lockable ring gear **485** is prevented from rotating in relative to the gear box housing **472'**. When the shifter rod **564** pulls the shift ring **542** in the distal direction "DD", the locking pins **544'** disengage their corresponding locking spring **620** which enables the spring **620** to flex to a starting position to enable the ring gear lock members **622** to disengage the lockable ring gear **485** to permit it to rotate relative to the gear box housing **472'**. Thus, when the retraction assembly **120** is activated, the lockable ring gear **485** is free to rotate relative to the gear box housing **472'** to thereby reduce the amount of retraction torque needed to cause the firing rod **104** to be retracted in the proximal direction "PD".

[0313] FIGS. **22-24** illustrate another retraction assembly arrangement for selectively manually retracting a distal portion of the firing rod of a surgical instrument **710** should the distal portion of the firing rod or other component of the surgical instrument to which it is operably attached become jammed during operation or operational power for advancing the firing rod assembly is interrupted. Except for the differences discussed below, the surgical instrument **710** may be similar in design and operation to the surgical instruments described above and/or disclosed in Zemlok '763, which has been incorporated by reference herein in its entirety.

[0314] As can be seen in FIGS. **22-24**, the surgical instrument **710** includes a housing **712** that operably supports a firing rod assembly **720**. The housing **712** may, for example, operably support a motor and gear assembly (not shown) for applying rotary motions to a drive tube which may result in the axial movement of the firing rod assembly **720** in the various manners described herein. In at least one arrangement, the firing rod assembly **720** may include a proximal firing member or rod portion **722** that operably interfaces with the drive tube in the various manners disclosed herein. In still other surgical instrument arrangements, the proximal firing rod portion **722** may operably interface with other drive arrangements and systems that are configured to apply axial motions to the proximal firing rod portion **722**.

[0315] As can be further seen in FIGS. **22-24**, the firing rod assembly **720** may further include a distal firing member or rod portion **724** that is operably coupled to a proximal end of the axially movable drive beam **60** of a loading unit **20** coupled thereto in the various manners described herein. A retraction assembly **730** in the form of a retraction linkage assembly **732** may be pivotally coupled between the proximal firing rod portion **722** and the distal firing rod portion **724**. In the illustrated arrangement, the retraction linkage assembly **732** includes an actuator link **734** that has a link handle portion **736** that is pinned to the proximal firing rod portion **722**. The retraction linkage assembly **732** further includes a distal retraction link **738** that is pinned to the actuator link **734** and the distal firing rod portion **724** as shown. In the illustrated embodiment, the housing **712** includes a distally-extending articulation housing portion **714** that may also include a distally-extending, shaft housing segment **716**. The shaft housing segment **716** may serve to axially support the retraction linkage assembly **732** as it axially moves in the distal and proximal directions in response to the axial movement of the firing rod assembly **720**. To facilitate axial movement of the retraction linkage

assembly **732** relative to the shaft housing segment **716**, the actuator link **734** extends out through a slot **718** formed in the shaft housing segment **716** as shown.

[0316] FIG. **22** illustrates the position of the firing rod assembly **720** and the retraction assembly **730** prior to firing. FIG. **23** illustrates the position of the firing rod assembly **720** and the retraction assembly **730** after being fired in the distal direction "DD". If during the firing process, the clinician desires to retract the drive beam **60** back to a starting position, the clinician can simply grasp the link handle portion **736** of the actuator link **734** and pivot it in the "R" direction as shown in FIG. **24** which draws the distal firing rod portion **724** and the drive beam **60** in the proximal "PD" direction. As illustrated in FIGS. **22** and **23**, during firing, the proximal end **725** of the distal firing rod portion **724** may be normally axially spaced from the distal end **735** of the proximal firing rod portion **734** a distance designated as "RD". The distance "RD" may remain, for example, unchanged during firing and normal retraction of the firing rod assembly **720** by the drive unit. However, when the clinician activates the retraction assembly, the distance between the proximal end **725** of the distal firing rod portion **724** and the distal end **735** of the proximal firing rod portion **734** (distance "RD'") will be less than distance "RD". In addition, as can be seen in FIG. **22**, the distance between the starting position of the distal working head **62** of the drive beam **60** and the ending position of the distal working head **62** (i.e., after a complete firing stroke) is represented as distance "FD". If desired, the distance "RD" may be sufficiently large enough to enable the distal firing rod portion **724** to be sufficiently retracted (i.e., moved closer to the distal end **735** of the proximal firing rod portion **722**) to return the working head **62** from the ending position back to its starting position. Stated another way, the distal firing rod portion **724** may be retracted a retraction distance that is at least equal to or greater than the firing distance "FD". In such arrangement, for example, if the working head **65** becomes jammed or otherwise stopped in its ending position, activation of the retraction assembly can fully retract the drive beam **60** to bring the distal working head **62** to its starting position wherein the distal working head **62** can permit the anvil **22** to pivot open and release the tissue.

[0317] FIGS. **25-28** illustrate an alternative firing rod assembly **720'** that may be selectively manually retractable. The firing rod assembly **720'** as shown includes a proximal firing rod portion **722'** that may operably interface with the drive tube in the various manners disclosed herein. In still other surgical instrument arrangements, the proximal firing rod portion **722'** may operably interface with other drive arrangements and systems configured to apply control motions to the proximal firing rod portion **722'**. The firing rod assembly **720'** may further include distal firing rod portion **724'** that is at least partially hollow and operably coupled to the end of the axially movable drive beam **60** of a loading unit **20** coupled thereto in the various manners described herein. For example, the distal firing rod portion **724'** may have a passage **725** therein that is sized to enable the distal firing rod portion **724'** to axially slide on the proximal firing rod portion **722'** a retraction distance "RDD". The retraction distance may be equal to or greater than the firing distance "FD" to enable a retraction assembly **730'** to retract the drive beam **60** a sufficient distance so as to move the working head **62** thereof from the ending position "EP" to the starting position "SP". See FIG. **25**. The retraction assembly **730'** may comprise a retraction latch **732'**. The retraction latch **732'** may include a latch handle **735** that is movable between a latched position (FIGS. **25** and **26**) and an unlatched position (FIGS. **27** and **28**). When in the latched position, the retraction latch **732'** affixes the distal firing rod portion **724'** such that it is prevented from axial sliding over the proximal firing rod portion **722'** and the distal firing rod portion **724'**. When in that orientation, the proximal firing rod portion **722'** essentially moves as a unit. Thus, when in the latched orientation, the firing rod assembly **720'** may be fired in the distal direction "DD" to its ending position "EP" as shown in FIG. **26**. Should the drive beam **60** become jammed or power be interrupted or lost to the instrument during the firing stroke (or for other reasons), the clinician can simply move the retraction latch handle **735** to the unlatched position (FIG. **27**) and then manually pull the retraction latch **732'** in the proximal direction "PD" as shown in FIG. **28**.

[0318] The various retraction systems and arrangements disclosed herein may address certain shortcomings commonly encountered by prior retraction arrangements used to retract motor-powered drive members employed by surgical end effectors. For example, various retraction arrangements disclosed herein may facilitate the manual application of retraction motions to the drive member and/or associated drive arrangements without encountering resistance normally provided by the gear/transmission arrangements associated with the motor, while enabling the gearing/transmission arrangements to remain "drivingly" or physically coupled to the motor.

[0319] Thus, at least one example comprises a surgical instrument that may include a firing member assembly that may comprise a portion that is supported for selective axial movement in a distal direction and a proximal direction. The instrument may further include a drive unit that comprises a motor that includes a motor shaft. A gear assembly may be drivingly coupled to the motor shaft and include an output shaft assembly that is configured to interface with the firing member assembly such that when the motor shaft is rotated in a first rotary direction, the portion of the firing member assembly is axially driven in the distal direction and when the motor shaft is rotated in a second rotary direction, the portion of the firing member is axially driven in the proximal direction. The surgical instrument may further comprise a retraction assembly that interfaces with the firing member assembly for manually applying other rotary motions to the firing member assembly in the second rotary direction when the motor is deactivated. The surgical instrument may further comprise locking means that interfaces with the retraction assembly and the drive unit for preventing transfer of the other rotary motions to the motor shaft while the gear assembly remains drivingly coupled to the motor shaft.

[0320] In accordance with yet another example, the surgical instrument may comprise a drive unit for generating firing and retraction motions. The instrument may further comprise a surgical end effector that is configured to perform at least one surgical function in response to an application of at least one of the firing and retraction motions thereto. The surgical instrument may further comprise a firing member assembly that may include a proximal firing member portion that operably interfaces with the drive unit and is configured to operably receive rotary actuation motions therefrom. The firing member assembly may further comprise a distal firing member portion that is supported distal to the proximal

firing member portion and is configured to transmit the firing and retraction motions to the surgical end effector. A retraction assembly may be operably coupled to the proximal firing member portion and the distal firing member portion. The retraction assembly may be selectively movable between an unactuated position wherein the retraction assembly is configured to transfer the firing and retraction motions from the proximal firing member portion to the distal firing member portion and an actuated position wherein the distal firing member portion is axially moved relative to the proximal firing member portion.

[0321] Another surgical instrument example may comprise a handle housing that includes an elongated shaft assembly that is operably coupled thereto. The elongated shaft assembly may support an axially movable firing rod therein. A loading unit may be operably coupled to the elongated shaft and be configured to interface with the firing rod. A drive tube may be rotatably supported within the handle housing and operably interface with the firing rod. The surgical instrument may further comprise a motor that has a motor shaft. The motor may be operably supported within the handle housing and be operably coupled to a power source. A gear assembly may be drivingly coupled to the motor shaft and include an output shaft assembly that is configured to interface with the drive tube such that when the motor shaft is rotated in the first rotary direction, the drive tube drives the firing rod in a distal direction and when the motor shaft is rotated in a second rotary direction, the drive tube drives the firing rod in a proximal direction. A retraction assembly may interface with the drive tube for manually applying other rotary motions thereto in the second rotary direction when the motor is deactivated. A locking means may interface with the retraction assembly and the gear assembly for preventing transfer of the other rotary motions to the motor shaft while the gear assembly remains drivingly coupled to the motor shaft.

[0322] Referring again to FIGS. **1-3**, in various embodiments, the motor **100** of the surgical instrument **10** can be operably coupled to a firing element, such as firing element **60**, and can drive the firing element **60** through the end effector or DLU **20** during a firing stroke. For example, the firing element **60** can cut tissue and/or fire staples into tissue during the firing stroke. A battery can supply current to the motor **100**, for example, and the current supplied to the motor **100** can relate to the torque generated by the motor **100**. Furthermore, the torque generated by the motor **100** can relate to the firing force exerted by the firing element **60**. The voltage across the motor can relate to the angular velocity of the motor **100**, for example, which can relate to the speed of the firing element **60**. Referring now to FIG. **63**, the motor can define a torque-voltage curve **5802**. In various embodiments, the torque-voltage curve **5802** can have a maximum torque T_1 at optimized voltage V. At voltages greater than and/or less than the optimized voltage V, for example, the torque generated by the motor can be less than the maximum torque T_1. For example, at a voltage of ½V, the torque-voltage curve **5802** can have a torque T_2, which can be less than T_1, for example.

[0323] In various embodiments, a control system in signal communication with the motor can supply current from the battery to the motor. In some embodiments, the control system can include speed management control, which can control the speed of the firing element, for example. The control system can include a variable resistance circuit and/or a voltage regulation circuit, for example, which can control the current supplied to and/or the voltage across the motor. In such embodiments, the control system can control the torque and/or the angular velocity of the motor, and thus, the firing force and/or the speed of the firing element coupled to the motor. For example, a voltage regulation circuit can regulate the voltage across the motor to affect the speed of the firing element. Referring to FIG. **63**, if the voltage regulation circuit reduces the voltage from the ideal voltage V to ½V, for example, the torque can be reduced to T_2, which can be less than the maximum torque T_1, and the speed can be adjusted to speed S_2, for example.

[0324] In various embodiments, the control system can include a pulse width modulation circuit, and the control system can supply pulses of current to the motor. Referring primarily to FIGS. **64**(*a*)-**65**(*b*), the current can be pulsed at a constant voltage. In various embodiments, the duty cycle of the pulses, i.e., the duration of the pulses per interval or period, can affect the velocity of a firing element **5804**. When the duty cycle is higher (FIG. **64**(*a*)), each pulse can be a longer portion of the interval, and, as a result, the motor can drive the firing element **5804** at a the faster speed S_1, for example. When the duty cycle is lower (FIG. **64**(*b*)), each pulse can be a shorter portion of the interval, and, as a result, the motor can drive the firing element **5804** at the slower speed S_3, for example. In various embodiments, the pulse width modulation circuit can provide current pulses to the motor at the optimized voltage V (FIG. **63**) of the motor. In such embodiments, the speed of the firing element **5804** can be controlled without reducing the torque generated by the motor. For example, the motor can operate at the optimized voltage V, to generate the maximum torque T_1, for example, and the firing element **5804** can be driven through the end effector at a reduced speed, such as speed S_3, for example, and/or any suitable speed by altering the width of the voltages pulses.

[0325] In various embodiments, the battery can have a volt-ampere limit or power threshold. In other words, the battery can supply a limited amount of energy per unit time. The power threshold of the battery can be related to the battery and/or circuit design. For example, thermal limits on the battery and/or the circuit, such as heat capacity and/or wire insulation, for example, can affect the power threshold. Furthermore, the power threshold of the battery can limit the amount of current supplied to the motor. In various embodiments, a motor utilizing speed management control, such as pulse width modulation, for example, may not require the maximum volt-amperes of the battery. For example, when the battery supplies current pulses at the maximum or optimized voltage to drive the firing element at the desired speed and maximum or optimized torque, surplus current may not be utilized to drive the firing element. In such embodiments, the surplus current can be used to produce additional torque. Referring to FIGS. **66**(*a*)-**66**(*c*), a motor can include an additional or secondary set of coils, for example, and the surplus current can be selectively directed to the additional set of coils to generate additional torque. In such embodiments, the motor can produce more torque at lower speeds, for example. In various embodiments, the control system can maximize the surplus current supplied to the secondary set of coils based on the volt-ampere limit of the battery, for example. Furthermore, in certain embodiments, the control system can optimize the torque generated by the motor during at least a portion of the firing stroke.

[0326] Referring still to FIGS. **66**(*a*)-**66**(*c*), a battery **6002** can selectively supply current to a motor **6004**. The motor **6004** can include a primary set of coils **6006**, and a secondary set of coils **6008**, for example. In various embodiments, a control system **6020** in signal communication with the motor **6004** can selectively direct current to the primary set of coils **6006** and/or the secondary set of coils **6008**. For example, the control system **6020** can supply current to the primary set of coils **6006** during a first operating state, and can supply current to the primary set of coils **6006** and the secondary set of coils **6008** during a second operating state, for example. In various embodiments, a switch, such as switch **6010**, for example, can move between an open position and a closed position to selectively supply current to the secondary set of coils **6008**, for example. In various embodiments, the sets of coils **6006**, **6008** can be separately activatable. Furthermore, the control system **6020** can include a pulse width modulation circuit **6022**, and the battery **6002** can supply current pulses to at least one of the sets of coils **6006**, **6008**, for example. In various embodiments, the primary set of coils **6006** can be coupled to a first circuit **6030** (FIG. **66**(*a*)), and the second set of coils can be coupled to a second circuit **6032** (FIG. **66**(*a*)) that is independent of the first circuit **6030**. In other embodiments, the primary and secondary set of coils **6006**, **6008** can be arranged in parallel (FIG. **66**(*b*)) or in series (FIG. **66**(*c*)), for example. In certain embodiments, the motor **6004** can include at least one additional set of primary coils and/or at least one additional set of secondary coils, for example.

[0327] In various embodiments, the motor can generate a first amount of torque during the first operating state and a second amount of torque during the second operating state. The second amount of torque can be greater than the first amount of torque, for example. Furthermore, the additional torque generated by the secondary set of coils **6006** during the second operating state may prevent and/or limit lock-out of the firing element during a firing stroke. For example, referring to FIG. **67**, the motor can drive the firing element distally during the first operating state and can drive the firing element proximally during the second operating state. In various embodiments, the motor can generate greater torque when retracting the firing element than when advancing the firing element. In such embodiments, retraction of the firing element may be improved. If the firing element becomes jammed, e.g., the tissue is too thick and/or tough for the firing element to cut and/or staple, the additional torque may be utilized to retract the firing element, for example. Referring still to FIG. **66**, the torque generated by the motor can be gradually increased during a "soft" start phase **5902** of the firing stroke, and/or can be gradually decreased during a "soft" stop **5904**, **5906** phase of the firing stroke. For example, when advancing the firing element, the motor can incrementally, or slowly, increase the firing speed at the beginning of the firing stroke, and can incrementally, or slowly, decrease the firing speed as the firing element completes the forward portion of the firing stroke. Furthermore, in various embodiments, the motor can immediately or substantially immediately generate the maximum torque and/or speed when retracting the firing element. The motor can utilize the additional set of coils **6008** (FIGS. **65**(*a*)-(*c*)) to max-out the torque generated at the beginning of retraction, for example.

[0328] Referring to FIG. **68**, the control system can control the firing element to move at a slower speed during a trial segment **5912** of the firing stroke. For example, when advancing the firing element, the firing element can initially move at a slower speed to ensure the selection and/or the placement of the end effector is appropriate for the targeted tissue. Furthermore, as described in greater detail herein, a surgeon can engage an actuator, such as a switch or a button, for example, to actuate the motor and initiate opening and closing of the end effector jaws, movement of the firing element, and/or articulation of the loading unit, for example. Initiation of a trial segment, such as the trial segment **5912** indicated in FIG. **68**, for example, when the actuator is engaged and at the beginning of a motor-driven action can allow the surgeon to "trial" the surgical action, to ensure that the intended and/or appropriate surgical action has been initiated. For example, in certain embodiments, a first button can initiate motor-driven articulation in a first direction, and a second button can initiate motor-driven articulation in a second direction. When the surgical instrument is rotated and/or oriented "upside down" the placement of the first and second buttons can rotate and/or become reversed from the standard placements as viewed from the operator's perspective. If the first direction is the intended articulation direction, it may be desirable to ensure the loading unit is being articulated in the first direction, i.e., that the first button was in fact actuated, during a trial segment. Similarly, if the second direction is the intended articulation direction, it may be desirable to ensure the loading unit is being articulated in the second direction, i.e., that the second button was actuated, during a trial segment. In certain embodiments, a trial segment during the initial portion of a surgical action can provide time for the surgeon to change and/or modify the surgical action if a non-intended surgical action has been initiated. As described in greater detail herein, a pulse width modulation circuit, such as pulse width modulation circuit **6022**, for example, can accomplish the trial segment during an initial portion of a surgical action.

[0329] As discussed above, the motor controller can be configured to utilize pulse width modulation to operate the motor **6004**. In various instances, the motor controller can utilize the same pulse width modulation for the primary set of coils **6006** and the secondary set of coils **6008**, for example. In other instances, the motor controller can utilize a first pulse width modulation signal for the primary set of coils **6006**, and a second, or different, pulse width modulation signal for the secondary set of coils **6008**. In some instances, the motor controller can utilize a pulse width modulation signal for one of the sets of coils **6006**, **6008**, but not the other. Moreover, the teachings discussed herein can be adapted to motors having more than two sets of coils. For instance, the motor controller can utilize a plurality of pulse width modulation signals to operate a plurality of coil sets.

[0330] In various embodiments, the motor can be a brushed DC motor or a brushless DC motor, for example. In certain embodiments, the motor can be a stepper motor, such as a hybrid stepper motor, for example. Stepper motors can provide rotation control, such that an encoder is not necessary. Elimination of the encoder can reduce cost and/or complexity to the motor, for example. Referring to FIGS. **69** and **70**, the motor can be a simplified stepper motor. For example, the motor can comprise four electromagnetic poles spaced around the perimeter. Referring now to FIGS. **71**-**74** (*c*), the motor can be a hybrid stepper motor. The hybrid stepper motor can comprise permanent magnets and electromagnets, for example.

[0331] Prior surgical instrument arrangements disclosed in, for example, Zemlok '763 and Zemlok '344 employ two separate motors. One motor is employed, for example, to advance the drive member distally through the loading unit which results in the closing of the anvil, cutting of tissue and firing of staples from the staple cartridge supported in the loading unit. The other motor is employed to articulate the loading unit about an articulation joint. Further details relating to motors used for articulating loading unit arrangements are also disclosed in U.S. Pat. No. 7,431,188, the entire disclosure of which is incorporated by reference herein. The use of two motors in such devices may increase the complexity and add to the overall expense of the surgical instrument. For example, such arrangements may double the number of retraction systems and other mechanisms that could fail during use. The surgical instrument **810** depicted in FIGS. **29-31** employs a single motor which may be selectively employed to fire and articulate a surgical end effector configured to perform at least one surgical procedure in response to firing motions applied thereto.

[0332] In at least one form, for example, the surgical instrument **810** may employ many of the same components employed in the various surgical instruments described in detail herein. For example, the surgical instrument **810** includes a housing **12** that operably supports a motor **100** therein that is configured to generate rotary actuation motions. The motor **100** is operably coupled to a gear assembly **820** that has a selectively positionable drive coupler assembly **840** associated therewith which will be described in further detail below. The surgical instrument **810** may further include an articulation system, generally designated as **859** that operably interfaces with the elongated shaft assembly for applying articulation motions to the surgical end effector. In one form, for example, the articulation system **859** may include an articulation actuation mechanism, generally designated as **860** which may be substantially similar to those articulation actuation mechanisms disclosed in Zemlok '763 and/or Zemlok '344 and/or U.S. Pat. No. 7,431,188 except for those differences discussed below. For example, the housing **12** may include a barrel portion **90** that has a rotatable member **92** mounted thereon. The rotatable member **92** may interface with a proximal end of the elongated shaft assembly to facilitate rotation of the elongated shaft assembly relative to the housing **12**. The rotatable member **92** may operably support an articulation knob and slip clutch arrangement as disclosed in U.S. Pat. No. 7,431,188. A main articulation gear **94** of that arrangement is represented by broken lines in FIGS. **29** and **30**. The main articulation gear **94** may be connected to a main shaft **95** by a slip clutch as described in the aforementioned U.S. Patent No. **7,431,188** such that rotation of the main articulation gear **94** will cause corresponding rotation of main shaft **95**. As further described therein, the articulation knob may serve as an articulation position indicator. The main shaft **95** operably interfaces with a J-channel member **96** that operably interfaces with the proximal end of an articulation link assembly **97**. In one form, the articulation link assembly **97** may comprise a proximal articulation link **98** that interfaces with the articulation link **70** (FIG. **3**) in the loading unit **20**.

[0333] The articulation mechanism **860** may further include an articulation drive train arrangement **870** that operably interfaces with the main articulation gear **94** and the drive coupler assembly **840**. As can be seen in FIGS. **29** and **30**, the articulation drive train arrangement **870** may include an articulation drive shaft **872** that is attached to an output of the drive coupler assembly **840** as will be discussed in further detail below. A first articulation drive gear **873** is attached to the articulation drive shaft and is in meshing engagement with a central gear race **875** on a second articulation transfer gear **874** that is rotatably supported within the rotatable member **92**. Thus, rotation of the first articulation drive gear **873** results in rotation of the second central articulation transfer gear **874**. As can be further seen in FIGS. **29** and **30**, a "third" articulation shaft gear **877** is mounted to a second articulation shaft **876** that has a "fourth" articulation worm gear **878** thereon. The third articulation shaft gear **877** is in meshing engagement with the second central articulation transfer gear **875** such that rotation of the first articulation drive gear **873** ultimately results in the rotation of the third articulation shaft gear **877** and the second articulation shaft **876**. The fourth articulation worm gear **878** is in meshing engagement with the main articulation gear **94** such that rotation of the fourth articulation worm gear **878** results in rotation of the main articulation drive gear **94** and ultimately application of articulation motions to the articulation link assembly **97**. As will be discussed in further detail below, the articulation drive shaft **872** is rotated by the motor **100** when the drive coupler assembly **840** is in an articulation control orientation.

[0334] As can be seen in FIG. **31**, the motor **100** is operably coupled to the gear assembly **820**. The gear assembly **820** may include a gear box housing **822** that is coupled to the motor **100**. For example, the gear box housing **822** may be coupled to the motor housing **101** by screws **103** or other mechanical fasteners and/or fastener arrangements. The gear assembly **820** may comprise a planetary gear arrangement **821** that is operably coupled to the motor shaft **107**. In one arrangement for example, a ring gear **823** may be formed on the inner surface of the gear box housing **822**. A primary sun gear **821** is coupled to the motor shaft **107**. The primary sun gear **821** is in meshing engagement with a plurality of first planetary gears **825** that are supported on a first planetary gear carrier **824** such that they are also in meshing engagement with the ring gear **823**. A first sun gear **826** is formed on or otherwise attached to the first planetary gear carrier **824** and is in meshing engagement with a plurality of second planetary gears **828** that are supported on a second planetary gear carrier **827**. The second planetary gears **828** are also supported in meshing engagement with the ring gear **823**. A second sun gear **829** is formed on or otherwise attached to the second planetary gear carrier **827** and is in meshing engagement with a plurality of third planetary gears **831**. The third planetary gears **831** are supported on a third planetary gear carrier **830** and are supported in meshing engagement with the ring gear **823**. A third sun gear **833** is formed on or is otherwise attached to a shaft extension **832** on the third planetary gear carrier **830** and is in meshing engagement with a plurality of fourth planetary gears **835** that are attached to a coupler gear that comprises a fourth planetary gear carrier **834** that is rotatably supported on the shaft extension **832**. In addition, a thrust bearing **836** may be journaled on the shaft extension **832** between the fourth planetary gear carrier **834**. The fourth planetary gears **835** are in meshing engagement with an output shaft unit **850** that is rotatably supported by the gear box housing **822**. A second thrust bearing **836** may be supported between the fourth planetary gears and the output

shaft unit **850** as can be seen in FIG. **30**. The fourth planetary gears **835** are supported in meshing engagement with an inner gear race **854**.

[0335] In the illustrated embodiment, the output shaft unit **850** is operably coupled to a clutch **230** of the type and construction disclosed in Zemlok '763 which has been herein incorporated by reference in its entirety. Further details regarding the construction and operation of such clutch **230** may be obtained from that publication. In an alternative embodiment, however, the clutch **230** may be replaced with a shaft-to-shaft coupler or sleeve arrangement that serves to facilitate the coupling of the output shaft unit **850** directly to the drive tube **102**.

[0336] Referring again to FIG. **31**, a primary articulation drive gear **837** is attached to the articulation drive shaft **872** and is in meshing engagement with an external gear ring **838** on the fourth planetary gear carrier **834**. In various forms, the drive coupler assembly **840** may further include a coupler selector member **842** that is movably coupled to or otherwise movably supported by the gear box housing **822** or other portion of housing **812**. In at least one arrangement, the coupler selector member **842** may be formed with a first drive shaft retainer portion **844** and a first articulation shaft retainer portion **846**. The first drive shaft retainer portion **844** comprises a grooved, roughened, etc. area that is configured to non-movably engage a second drive shaft retainer portion **845** on the output shaft unit **850**. Similarly, the first articulation shaft retainer portion **846** comprises a grooved, roughened, etc. area that is configured to non-movably engage a second articulation shaft retainer portion **847** on the fourth planetary gear carrier **834**.

[0337] Operation of the coupler assembly **840** may be understood from reference to FIGS. **29** and **30**. As can be seen in FIG. **29**, the coupler selector member **842** is pivoted to the articulation position wherein the first articulation shaft retainer portion **846** is in non-movable engagement with the second articulation shaft retainer portion **847** on the output shaft unit **850**. When in that position, the output shaft unit **850** is prevented from rotating about the longitudinal axis LA-LA. Thus, when in that position, operation of motor **100** will result in the rotation of the third sun gear **833** which is in meshing engagement with the fourth planetary gears **835**. Rotation of the fourth planetary gears **835** will result in the rotation of fourth planetary gear carrier **834** which can freely rotate. Such rotation of the fourth planetary gear carrier **834** will also result in the rotation of the primary articulation gear **837** that is coupled to the articulation drive shaft **872**. Rotation of articulation drive shaft **872** will cause the first articulation drive gear **873** to rotate and drive the second articulation transfer gear **874**. Rotation of the second articulation transfer gear **874** results in rotation of the third articulation transfer gear and the fourth articulation worm gear **878**. Rotation of the fourth articulation worm gear **878** will drive the main articulation gear **94** which will result in the application of axial articulation motions to the articulation links **97**, **70** which ultimately results in the articulation of the loading unit **20** about the articulation joint. Rotation of the motor drive shaft **107** in a first rotary direction will result in articulation of the loading unit in a first articulation direction and rotation of the motor drive shaft **107** in an opposite rotary direction will result in articulation of the loading unit in a second articulation direction that is opposite to the first articulation direction.

[0338] Referring next to FIG. **30**, the coupler selector member **842** is pivoted to the drive or firing position wherein the first drive shaft retainer portion **844** is in non-movable engagement with the second drive shaft retainer portion **845** on the fourth planetary gear carrier **834**. When in that position, the fourth planetary gear carrier **834** is prevented from rotating about the longitudinal axis "LA-LA". Thus, when in that position, operation of motor **100** will result in the rotation of the third sun gear **833**. Third sun gear **833** is in meshing engagement with the fourth planetary gears **835** supported on the fourth planetary gear carrier **834**. Because the fourth planetary gear carrier **834** is prevented from rotating by virtue of the non-movable engagement between the first articulation shaft retainer portion **846** and the second articulation shaft retainer portion **847** on the fourth planetary gear carrier **834**, rotation of the fourth planetary gears **835** will result in rotation of the output shaft unit **850**. Output shaft unit **850** may be coupled to the drive tube **102** by the clutch assembly **230** or by a direct coupling. Thus rotation of the output shaft unit **850** results in rotation of the drive tube **102**. As discussed above, rotation of the drive tube **102** results in the axial movement of the firing rod (not shown in FIG. **31**). Rotation of the motor drive shaft **107** in a first rotary direction will result in the distal advancement of the firing rod and rotation of the motor drive shaft **107** in an opposite rotary direction will result in the proximal movement of the firing rod. In various embodiments, closure of the loading unit **20** jaws, e.g., pivoting of the anvil assembly **22** relative to the carrier **24**, can couple and/or decouple the motor **100** to the articulation system and/or the firing system of the surgical instrument **10**. For example, closure of the anvil assembly **22** relative to the carrier **24** can decouple the motor **100** from the articulation system, e.g. from the articulation drive shaft **872**, and can couple the motor **100** to the firing system, e.g., to the output shaft unit **850**. Furthermore, opening of the anvil assembly **22** relative to the carrier **24** can decouple the motor **100** from the firing system, and can couple the motor **100** to the articulation system. In such embodiments, the motor **100** can affect articulation of the loading unit **20** when the loading unit **20** is open, and the motor **100** can affect firing of the firing rod when the loading unit **20** is closed. The surgical instrument **10** can include a sensor and/or a selector, for example. In certain embodiments the sensor can detect closure of the loading unit **20** jaws. Furthermore, the sensor can be in signal communication with the selector, such as coupler selector member **842**. The selector can couple and/or decouple the motor **100** to the articulation system and/or the firing system when the anvil assembly **22** opens and/or closes relative to the carrier **24**, for example. Various powered surgical instruments that employ the various drive coupler arrangements disclosed herein may represent vast improvements over prior powered surgical instruments that employ multiple motors to articulate the end effector and fire the end effector drive member.

[0339] For example, at least one surgical instrument comprises an elongated shaft assembly that defines a longitudinal tool axis. A surgical end effector may be operably coupled to the elongated shaft assembly for selective articulation relative thereto. The surgical end effector may be configured to perform at least one surgical procedure in response to firing motions applied thereto. An articulation system may operably interface with the elongated shaft assembly for applying articulation motions to the surgical end effector. A firing member assembly may operably inter-

face with the elongated shaft assembly to apply the firing motions to the surgical end effector. The surgical instrument may further comprise a motor that is configured to generate rotary actuation motions. A drive coupler assembly may interface with the motor and the articulation system such that when the drive coupler assembly is in a first configuration, operation of the motor will result in the application of the actuation motions to the articulation system resulting in articulation of the surgical end effector relative to the longitudinal tool axis and when the drive coupler assembly is in a second configuration, operation of the motor will result in the application of actuation motions to the firing member assembly causing the firing member assembly to apply at least one of the firing motions to the surgical end effector.

[0340] Another surgical instrument example may comprise a handle that has an elongated shaft assembly operably coupled thereto that defines a longitudinal tool axis. A loading unit may be operably coupled to the elongated shaft assembly and be configured to sever and staple tissue in response to firing motions applied thereto. The loading unit may be configured to be selectively articulated relative to the longitudinal tool axis about an articulation joint. The surgical instrument may further comprise an articulation system that includes an articulation link assembly that is supported by the elongated shaft assembly and is configured to operably interface with an articulation joint portion in one of the elongated shaft assembly and the loading unit. An articulation actuation mechanism may be supported by the handle and interface with the articulation link assembly to apply articulation actuation motions thereto. The surgical instrument may further comprise a firing member assembly that operably interfaces with the loading unit to apply the firing motions thereto. A motor may be operably supported by the handle and be configured to generate rotary actuation motions. A drive coupler assembly may interface with the motor and the articulation actuation mechanism such that when the drive coupler assembly is in a first configuration, operation of the motor will result in the application of the actuation motions to the articulation system resulting in articulation of the loading unit relative to the longitudinal tool axis and when the drive coupler assembly is in a second configuration, operation of the motor will result in the application of actuation motions to the firing member assembly causing the firing member assembly to apply at least one of the firing motions to the loading unit.

[0341] Still another surgical instrument example may comprise an elongated shaft assembly that defines a longitudinal tool axis. A surgical end effector may be operably coupled to the elongated shaft assembly for selective articulation relative thereto. The surgical end effector may be configured to perform at least one surgical procedure in response to firing motions applied thereto. An articulation system may operably interface with the elongated shaft assembly for applying articulation motions to the surgical end effector. A firing member assembly may operably interface with the elongated shaft assembly to apply the firing motions to the surgical end effector. A motor may be configured to generate rotary actuation motions. The surgical instrument may further comprise means for selectively applying an output motion from the motor to each of the articulation system and the firing member assembly.

[0342] In certain motor-driven surgical instruments, a motor can provide haptic feedback to the operator of the surgical instrument. For example, rotation of the motor can generate vibratory motion or noise, which can depend on the direction and/or speed of the motor's rotation, for example. However, various motors may generate minimal noise, and thus, haptic feedback to the surgeon can be limited and/or may be unappreciated by the surgeon. For example, various modification and/or improvements in motor and/or transmission design may reduce the haptic noise generated by the motor and/or the transmission. In such embodiments, it may be advantageous to modify the motor and/or gear assembly operably coupled to the motor to generate artificial, or intentional, haptic feedback and/or other sensory feedback. In certain embodiments, the surgical instrument can communicate the feedback to the surgeon without requiring the surgeon to look away from the operating site. For example, the motor and/or gears can generate haptic and/or audible feedback to communicate with the surgeon. In such embodiments, the operator need not look at a display screen, for example, to ascertain an operating state or condition of the surgical instrument. As described in greater detail herein, the surgical instrument can communicate the rotational direction of the motor, for example, which can correspond to the firing direction of the firing member and/or the articulation direction of the loading unit, for example. Additionally or alternatively, the surgical instrument can communicate the speed and/or the position of the firing member during a firing stroke, for example, and/or the speed and/or degree of articulation of the loading unit, for example.

[0343] In various embodiments, as described in greater detail herein, a motor can be operably coupled to a firing assembly and/or an articulation assembly. Referring to FIG. **168**, the motor **7010** can drive a motor shaft **7014**, which can engage a gear assembly **7020**, for example. In various embodiments, a key, such as key **7016** on the motor shaft **7014**, can engage a portion of the gear assembly **7020**. In certain embodiments, the gear assembly **7020** can include disks **7022**, **7024**, for example, which can be structured to rotate or spin along with the motor shaft **7014** when engaged therewith via a key. For example, the first disk **7022** can include a groove (not shown). Furthermore, a first key (not shown) extending from the motor shaft **7014** can engage the groove in the first disk **7022** such that the first disk **7022** rotates clockwise (CW) when the motor shaft **7014** rotates CW and rotates counterclockwise (CCW) when the motor shaft **7014** rotates CCW. In at least one embodiment, the first key can remain engaged with the groove in the first disk **7022** throughout the operation of the surgical instrument and/or motor thereof.

[0344] In certain embodiments, the first disk **7022** can be balanced relative to its axis of rotation along the motor shaft **7014**. Referring still to FIG. **168**, a mass, such as mass **7026**, for example, can extend from the first disk **7022** and may shift the center of mass of the first disk **7022** off of the axis of rotation of the first disk **7022**. For example, the mass **7026** can extend away from the motor shaft **7014** and/or away from the outer perimeter of the first disk **7022**. In other words, the mass **7026** can upset the balance of the first disk **7022**, result in a rotational unbalance of the first disk **7022**, and thus, generate a centrifugal force when the first disk **7022** rotates with the motor shaft **7014**. Consequently, rotation of the first disk **7022** and mass **7026** can generate haptic feedback, such as a vibration or wobble of the surgical instrument housing and/or handle, for example. The haptic feedback can correspond to an operating state or condition

of the surgical instrument. Furthermore, the haptic feedback generated by the rotation of the first disk **7022** and the mass **7026** can depend on the rotational speed of the motor shaft **7014**. In such embodiments, the firing speed and/or the articulation speed can also be communicated to the surgeon, for example. For instance, the first disk **7022** can generate haptic feedback having a higher frequency when the motor shaft **7014** is rotated faster and a lower frequency when the motor shaft **7014** is rotated slower.

[0345] Similar to the first disk **7022**, in certain embodiments, the second disk **7024** can be balanced relative to its axis of rotation on the motor shaft **7014**. Referring still to FIG. **168**, however, a mass, such as mass **7028**, for example, can extend from the second disk **7024** and may shift the center of mass thereof. For example, the mass **7028** can extend away from the motor shaft **7014** and/or away from the outer perimeter of the second disk **7024**. In other words, the mass **7028** can upset the balance of the second disk **7024**, result in a rotational unbalance of the second disk **7024**, and thus, generate a centrifugal force when the second disk **7024** rotates with the motor shaft **7014**. Consequently, rotation of the second disk **7024** and mass **7028** can generate haptic feedback, such as a vibration or wobble of the surgical instrument housing and/or handle, for example. The haptic feedback can correspond to an operating state or condition of the surgical instrument. Furthermore, the haptic feedback generated by the rotation of the second disk **7024** and mass **7028** can depend on the rotational speed of the motor shaft **7014**. In such embodiments, the firing speed and/or the articulation speed can also be communicated to the surgeon, for example. In various embodiments, the first and/or second disks **7022**, **7024** can include additional masses, similar to masses **7026** and/or **7028**, for example, which can further contribute to a haptic response of the surgical instrument housing and/or handle, for example. Furthermore, in some embodiments, the motor shaft **7014** can operably engage additional and/or different disks of the gear assembly **7120** to selectively generate additional and/or different haptic feedback.

[0346] Referring still to FIG. **168**, the second disk **7024** can include an inner perimeter **7026**. In various embodiments, a second key **7016** can extend from the motor shaft **7014**, and can operably engage the second disk **7024** via the inner perimeter **7030**. The inner perimeter **7030** can include a plurality of planar surfaces **7032** and a plurality of arcuate surfaces **7034** between adjacent planar surfaces **7032**, for example. Each pair of planar and arcuate surfaces **7032**, **7034** can define a groove, which can be structured to receive the second key **7016**. In certain embodiments, when the key **7016** rotates in a first direction, the key **7016** can abut a planar surface **7032** and become held and/or retained in a groove of the second disk **7024**. In such an arrangement, the second disk **7024** can rotate in the first direction along with the motor shaft **7014**. Furthermore, in certain embodiments, when the key **7016** rotates in a second direction opposite to the first direction, the key **7016** can rotate past the arcuate surfaces **7034** and may become held and/or retained in the grooves in the inner perimeter **7030**. In other words, the key **7016** can rotate relative to the second disk **7024**. In such an arrangement, the motor shaft **7014** can rotate in the second direction relative to the second disk **7024**. Accordingly, the key **7016** may only engage the second disk **7024** and cause the second disk **7024** to rotate when the motor shaft **7014** rotates in the first direction. In certain embodiments, the first direction can correspond to a CW rotation, and in other embodiments, the first direction can correspond to a CCW rotation.

[0347] As described herein, because engagement of the second disk **7024** can depend on the rotational direction of the motor shaft **7014**, the second disk **7024** may only rotate when the motor shaft **7014** rotates in one direction, such as when the motor **7010** drives the firing member in one direction and/or rotates the loading unit in one direction. For example, the second disk **7024** may only rotate when the motor **7010** retracts the firing member or rotates the loading unit CW, for example. Such selective engagement of the second disk **7024** can affect the haptic feedback generated by the surgical instrument. In other words, different and/or greater haptic feedback can result based on the selective engagement of the second disk **7024**. For example, in embodiments where the second disk **7024** only rotates when the motor **7010** rotates to retract the firing member, a greater haptic feedback can be generated during retraction than during advancement of the firing member. During retraction, the second disk **7024** can also contribute to the generation of haptic feedback, which can result in a greater or larger summation of feedback forces. In such embodiments, the greater haptic feedback generated by the first and second disks **7022**, **7024** can communicate to the surgeon that the firing member is being retracted by the motor **7010**. In various embodiments, in view of the above, only the first disk **7022** may be rotated when the motor shaft **7014** is rotated in one direction and both disks **7022**, **7024** may be rotated when the motor shaft **7014** is rotated in the opposite direction. As such, the disks **7022**, **7024** may generate different feedback when the motor shaft **7014** is rotated in different directions.

[0348] Referring now to FIG. **169**, in certain embodiments, the motor **7010** can drive the motor shaft **7014**, which can engage a gear assembly **7120**. In various embodiments, a key, such as the key **7016** on the motor shaft **7014**, for example, can engage the gear assembly **7120**. Similar to the gear assembly **7020**, the gear assembly **7120** can include a plurality of disks, such as a first disk **7122** and a second disk **7124**. The first and second disks **7122**, **7124** can be structured to rotate or spin with the motor shaft **7014** when selectively engaged therewith via a key. For example, the first disk **7122** can include a groove (not shown). Further, a first key (not shown) extending from the motor shaft **7014** can engage the groove of the first disk **7122** such that the first disk **7122** rotates with the motor shaft **7014**. In certain embodiments, the first key can be non-disengageable from the groove of the first disk **7122** during use. The second disk **7124** can include an inner perimeter **7130**, similar to the inner perimeter **7030** of second disk **7024**, for example. The inner perimeter **7130** can comprise a plurality of planar surfaces **7132** and a plurality of arcuate surfaces **7134**. As described herein with respect to FIG. **168**, the key **7016** can selectively engage and disengage the inner perimeter **7130** of the second disk **7124** depending on the rotational direction of the motor shaft **7014**. For example, when the motor shaft **7014** rotates in a first direction, the key **7016** can engage the second disk **7124** causing the second disk **7124** to rotate with the motor shaft **7014**. Furthermore, when the motor shaft **7014** rotates in a second direction, the key **7016** can remain disengaged from the second disk such that the key **7016** can rotate relative to the second disk **7024** within the inner perimeter **7130** thereof.

[0349] In various embodiments, the first disk **7122** can include at least one pick **7126**, and the second disk **7124** can also include at least one pick **7128**. When the disks **7122**, **7124** rotate, the picks **7126**, **7128** can strike elements of an audio feedback generator **7140**. For example, the picks **7126**, **7128** can strike clickers **7142**, **7144** of the audio feedback generator **7140**. In various embodiments, the pick or picks **7126** of the first disk **7122** can strike and deflect the first clicker **7142** when the first disk **7122** rotates, and the pick or picks **7128** of the second disk **7124** can strike and deflect the second clicker **7144** when the second disk **7124** rotates. Impact and deflection of the clickers **7142**, **7144** can cause the clickers **7142**, **7144** to resonate and generate an auditory signal. In other words, the rotation of the first and second disks **7122** can generate audio feedback. Furthermore, the rotational speed of the rotating disks **7122**, **7124** and/or the number and arrangement of picks extending from the first and second disks **7122**, **7124** can affect the frequency of the auditory signals. In such embodiments, the speed of the motor and corresponding firing speed of the firing element and/or articulation of the speed of the loading unit can be communicated to the surgeon, for example.

[0350] Referring primarily to FIGS. **170** and **171**, in various embodiments, the geometry of the picks **7126**, **7128** can affect the auditory signals generated by the audio feedback generator **7140**. For example, the picks **7126**, **7128** can each include a non-dampening surface **7150** and a dampening surface **7152**. The non-dampening surface **7152** can include a planar surface, for example, and the dampening surface **7152** can include an arcuate surface, for example. In various embodiments, where the non-dampening surface **7150** of the pick **7126** rotationally leads the dampening surface **7152** of the pick **7126** (FIG. **170**), resonance of the clicker **7142** can be dampened and/or stopped by the trailing dampening surface **7152** of the pick **7126**. For example, the arcuate geometry of the dampening surface **7152** may contact the deflected clicker **7126** to prevent and/or restrain vibration or resonance of the clicker **7126**. Conversely, where the dampening surface **7152** of the pick **7126** rotationally leads the non-dampening surface **7150** of the pick **7126** (FIG. **171**), resonance of the clicker **7142** may not be dampened by the non-dampening surface **7150** of the pick **7126**. For example, the planar geometry of the non-dampening surface **7150** can avoid and/or limit contact with the deflected clicker **7126** such that resonance of the clicker **7126** is permitted and/or less restrained. In other words, the rotational direction of the disks **7122**, **1724** and associated picks **7126**, **7128** can affect the auditory feedback generated by the surgical instrument. Accordingly, the operator of the surgical instrument can be informed of the operating state of the surgical instrument during its use, and without requiring the surgeon to look away from the surgical site. For example, the audio signals can be dampened when the firing member is retracted, and may not be dampened when the firing member is advanced. In other embodiments, the audio signals can be dampened when the firing member is advanced, and may not be dampened when the firing member is retracted. Furthermore, in some embodiments, the dampened auditory signals can correspond with articulation of the loading unit in one direction, and the un-dampened auditory signals can correspond with articulation of the loading unit in another direction, for example. In various embodiments, at least one audio feedback generator can be used alone and/or in combination with at least one haptic feedback system. Furthermore, in some embodiments, at least one haptic feedback system can be used alone and/or in combination with at least one audio feedback generator. Audio feedback and haptic feedback can communicate different operating conditions to the surgeon and/or can provide duplicative feedback to the surgeon regarding the same operating conditions, for example.

[0351] In various embodiments, the surgical instrument can generate feedback when the firing element approaches and/or reaches the end of the firing stroke and/or when the loading unit approaches and/or reaches the articulation limit. In various embodiments, such feedback can be different and/or additional to the feedback generated throughout a firing stroke and/or when the loading unit is articulated. Accordingly, the surgical instrument can notify the operator that the firing stroke is near completed and/or completed, for example, and/or can notify the operator that the loading unit is near the articulation limit and/or has reached the articulation limit.

[0352] Referring now to FIG. **172**, the motor **7010** and the motor shaft **7014** can be operably engaged with the gear assembly **7120**, as described in greater detail above. Furthermore, the disks **7122**, **7124** of the gear assembly **7120** can contact an audio feedback generator **7240**, which can be similar to audio feedback generator **7140**, for example. For example, the picks **7126**, **7128** on the disks **7122**, **7124** can deflect the clickers **7242**, **7244** of the audio feedback generator **7240** causing the clickers **7242**, **7244** to resonate and generate auditory feedback. Furthermore, the audio feedback generator **7240** can move or translate relative to the gear assembly **7120**. As described in greater detail below, the audio feedback generator **7240** can selectively move into and/or out of engagement with the clickers **7242**, **7244** on the disks **7122**, **7124** to selectively generate auditory signals. In other embodiments, the motor, gear assembly, and/or the disks thereof can move, such that the picks of the disks are selectively moved into and/or out of engagement with the clickers of an audio feedback generator to selectively generate auditory signals.

[0353] In various embodiments, the audio feedback generator **7240** can translate in the surgical instrument as the firing member moves during a firing stroke. For example, at the beginning of the firing stroke, the audio feedback generator **7240** can be misaligned with the picks **7126**, **7128** of the disks **7122**, **7124**. Furthermore, as the firing member moves distally and/or approaches the end of the firing stroke, the audio feedback generator **7240** can move toward and/or into alignment with the picks **7126**, **7128** of the disks **7122**, **7124**. In such embodiments, the audio feedback generator **7240** can generate auditory feedback when the firing member is near and/or at the end of the firing stroke. Referring to FIG. **173**, for example, the feedback generator can generate feedback when the firing member is within a range of positions near and/or at the end of the firing stroke, for example, to communicate the position of the firing member to the surgeon. In such embodiments, the surgical instrument can communicate the end of the firing stroke to the operator. For example, referring again to FIG. **172**, at least one pick **7126**, **7128** can be aligned with at least one clicker **7242**, **7244** as the firing member approaches the distal end of the firing stroke. At that time, the surgical instrument can generate a feedback to communicate the position of the firing member to the surgeon. When each pick **7126**, **7128** is aligned with one of the clickers **7242**, **7242**, a greater

and/or different feedback can be communicated to the surgeon. Furthermore, as the firing member is retracted, at least one pick **7126**, **7128** can again become misaligned with a clicker **7242**, **7244** such that a reduced and/or different feedback is communicated to the surgeon. Accordingly, as the feedback generator moves through the firing stroke, the feedback generator can communicate varying feedback to the operator based on the position of the firing member. Furthermore, the gear assembly **7120** can include additional disks and/or picks, which can move into and/or out of engagement with the audio feedback generator **7240**, and/or the audio feedback generator **7240** can include additional clickers, which can move into and/or out of engagement with the picks. In various embodiments, an audio feedback generator can communicate alternative and/or additional positions of the firing member to the surgeon. For example, an audio feedback generator can communicate auditory feedback at the midpoint and/or incremental points along the length of the firing and/or retraction path.

[0354] Referring now to FIGS. **174** and **175**, a movable feedback generator can also be utilized to communicate the articulation limit of the loading unit to the surgeon. For example, the audio feedback generator **7240** depicted in FIG. **172**, for example, can translate as the loading unit articulates. For example, when the loading unit is in an unarticulated configuration, the audio feedback generator **7240** can be misaligned with the picks **7126**, **7128** of the disks **7122**, **7124**. Furthermore, as the loading unit articulates, the audio feedback generator **7240** can move toward and/or into alignment with the picks **7126**, **7128** of the disks **7122**, **7124**. In such embodiments, the audio feedback generator **7240** can generate auditory feedback when the loading unit is near and/or at the articulation limit. For example, referring again to FIGS. **174** and **175**, the feedback generator can generate feedback when the firing member is within a range of positions near and/or at the end of the firing stroke to communicate the position of the firing member to the surgeon. In such embodiments, the surgical instrument can communicate the articulation limit to the operator. For example, referring again to FIG. **172**, at least one pick **7126**, **7128** can be aligned with at least one clicker **7242**, **7244** as the loading unit approaches its articulation limit, for example, approaches forty-five degrees. At that time, the surgical instrument can generate a feedback to communicate the position of the firing member to the surgeon. When the loading unit is nearer and/or at the articulation limit, each pick **7126**, **7128** can be aligned with one of the clickers **7242**, **7244**, and a greater and/or different feedback can be communicated to the surgeon. Furthermore, as the loading unit is articulated back toward the unarticulated, neutral position, at least one pick **7126**, **7128** can again become misaligned with a clicker **7242**, **7244** such that a reduced and/or different feedback is communicated to the surgeon. Accordingly, as the feedback generator moves through the firing stroke, the feedback generator can communicate varying feedback to the operator based on the configuration of the loading unit.

[0355] In various embodiments, it may be advantageous to protect certain components of a surgical instrument from fluid contact. For example, unintentional contact with a bodily fluid during use can damage the surgical instrument, and may limit and/or shorten the lifespan of the surgical instrument. Furthermore, it may be advantageous to protect certain components of a surgical instrument from fluid contact during sterilization. For example, unintentional contact with a sterilizing and/or cleaning fluid can damage the surgical instrument, and may prevent and/or limit the reusability of a surgical instrument. In various embodiments, certain components of a surgical instrument can be sealed and/or protected from fluid contact. For example, electronics in the surgical instrument can be sealed in epoxy for protection from fluids. Moving components of the surgical instrument, such as portions of the motor and/or the gear assembly, for example, can also be sealed and/or protected from fluid contact. Such a seal can accommodate the rotation of the various moving components, for example. Furthermore, in various embodiments, such a seal can also facilitate heat transfer such that the heat generated during the operation of the surgical instrument is more effectively dissipated.

[0356] Referring now to FIGS. **185** and **186**, in certain embodiments, a motor **7510** and/or a gear assembly **7520** can be sealed and/or protected from fluids during use and/or during sterilization treatments. The motor **7510** can be similar to the motor **100**, for example, and the gear assembly **7520** can be similar to the gear assembly **170**, for example. To seal and protect the motor **7510**, a motor housing, such as a rubber sleeve, for example, may be positioned around the motor **7510** within the housing **12** (FIG. **1**) of the surgical instrument **10** (FIG. **1**). Such a rubber sleeve may limit heat transfer from the motor **7510**, and the motor **7510** may be prone to overheating. In other embodiments, referring again to FIGS. **185** and **186**, the motor housing can comprise a clam-shell cover **7516**, for example, which can be positioned around the motor **7510**. In various embodiments, the clam-shell cover **7516** can include at least two portions, which can be hinged and/or clasped together, for example. The clam-shell cover **7516** can permit rotation of the motor **7510** and/or a motor shaft. Additionally, in certain embodiments, the clam-shell cover **7516** can facilitate heat transfer from the motor **7510** held herein. A contact arrangement **7512** (FIG. **186**), similar to the contact arrangement **210**, for example, can be employed to supply electrical current to the motor **7510**. The contact arrangement **7512** can include positive and negative annular contacts **7514***a*, **7514***b* (FIG. **186**), for example, which can operably connect to fixed positive and negative contacts **7518***a*, **7518***b* (FIG. **186**) held by the clam-shell cover **7516**, for example. Furthermore, the clam-shell cover **7516** can include an annular seal or gasket **7519**, which can abut the perimeter of the motor **7510**, and seal the motor **7510** and contact arrangement **7512** within the clam-shell cover **7516**, for example. In certain embodiments, the clam-shell cover **7516** can comprise a metallic material, which can facilitate heat transfer from the motor **7510**, for example, and may prevent overheating and/or damage to the motor **7410**.

[0357] Referring still to FIGS. **185** and **186**, the gear assembly **7520** can also be sealed and/or protected from fluids during use and/or sterilization. For example, a gasket **7522** can be positioned between the motor **7510** and the housing of the gear assembly **7520**, such that the motor **7510** and gear assembly **7520** form a fluid-tight seal. Furthermore, a sealing sleeve **7530** can be positioned around the housing of the gear assembly **7520**. The sealing sleeve **7530** can include a rim **7536**, which can abut the clam-shell cover **7516** and/or the motor **7510** to provide a fluid-tight seal therebetween. The sealing sleeve **7530** can also include an opening **7532** for an output shaft **7524**. For example, the output shaft **7524** of the gear assembly **7520** can extend

through the opening **7532**, and fins **7534** can extend toward the output shaft **7524** to provide a fluid-tight seal while permitting rotation of the output shaft **7524** within the opening **7532**. In various embodiments, the sealing sleeve **7530** and/or the rims **7536**, gaskets, and/or fins **7534** thereof can comprise rubber and/or another suitable material for forming a fluid-tight seal. In various embodiments, a mounting bracket or motor retainer **7540**, similar to the retainer **190**, for example, can hold the sealed gear assembly **7520** and the motor **7510** within the housing **12** (FIG. **1**) of the surgical instrument **10** (FIG. **1**).

[0358] FIGS. **32-37** illustrate another surgical instrument **910** that may include many of the features of the other surgical instruments disclosed herein. In at least one form, the surgical instrument **910** may include an articulation actuation mechanism, generally designated as **860**, which may be substantially similar to those articulation mechanisms disclosed in Zemlok '763, Zemlok '344 and/or U.S. Pat. No. 7,431,188 except for those differences discussed below. In other arrangements, the surgical instrument may include various forms of other articulation actuation mechanisms as described herein. As can be seen in FIG. **32**, the instrument **910** includes a housing **12** that may include a barrel-shaped mounting portion **90** that has rotatable member **92** mounted thereon. The rotatable member **92** interfaces with a proximal end of the elongated shaft assembly **16** to facilitate rotation of the elongated shaft assembly **16** relative to the housing **12**. Such arrangement permits the clinician to selectively rotate the elongated shaft assembly **16** and the loading unit **20** (or other form of surgical end effector) coupled thereto about the longitudinal tool axis "LA-LA". The rotatable member **92** may be non-removably mounted on the barrel portion **90** or it may be designed to be selectively detached therefrom.

[0359] As disclosed herein, depending upon the type and/or construction of the surgical end effector employed, it may be desirable to supply electric current to the end effector. For example, the end effector may employ sensor(s), light(s), actuators(s), etc. that require electricity for activation. In such arrangements, however, the ability to rotate the surgical end effector about the longitudinal tool axis "LA-LA" can be severely limited because the conductor system transporting power to the surgical end effector or loading unit through the elongated shaft from a source of electrical power may become wound up and severely damaged—particularly in instances where the elongated shaft has been rotated for more than one revolution. Various surgical instruments disclosed herein may employ a conductor management system generally designated as **930** that may avoid those problems.

[0360] Referring again to FIG. **32**, the surgical instrument **910** may be powered by an electrical power source **200**. The electrical power source may, for example, be of the type described in further detail in Zemlok '763. For example, the electrical power source **200** may comprise a rechargeable battery (e.g., lead-based, nickel-based, lithium-ion based, etc.). It is also envisioned that the electrical power source **200** may include at least one disposable battery. In at least one arrangement, for example, the disposable battery may be between about 9 volts and about 30 volts. FIG. **32** illustrates one example wherein the electrical power source **200** includes a plurality of battery cells **202**. The number of battery cells employed may depend upon the current load requirements of the instrument **910**. It is also conceivable that the electrical power source may comprise a source of alternating current available in the surgical suite. For example, an external power cord and plug (not shown) may be employed to transport alternating current from an outlet in the surgical suite to various components, conductors, sensors, switches, circuits, etc. in the surgical instrument housing and/or end effector. In other applications, the surgical instrument **910** may obtain power from, for example, a robotic system to which it is attached or otherwise associated with.

[0361] As can be further seen in FIG. **32**, the conductor management system **930** may include a primary conductor member or wire **932** that is coupled to or otherwise interfaces with the electrical power source **200** for receiving power therefrom. The primary conductor member **932** is coupled to a spiral, spool, and/or windable conductor assembly **934** that is supported within the rotatable member **92**. In one arrangement, for example, the spiral conductor assembly **934** may be formed or otherwise comprise a ribbon-like conductor **936** that is wound in a spiral fashion in the manner depicted, for example, in FIGS. **36** and **37**. For example, the spiral conductor assembly **934** may be fabricated from a spirally wound conductor that may have similar attributes to that of a spirally wound spring such as, for example, a torsion spring. In one form, for example, the conductor **936** may be wound in successive revolutions or wraps as shown in FIGS. **36** and **37**. In various arrangements, the conductor **936** may be wrapped for one or more complete revolutions. For example, the conductor **936** illustrated in FIGS. **36** and **37** is configured in more than four complete revolutions.

[0362] In various forms, the conductor **936** has a first end **938** that may be fixed, for example, to the barrel portion **90** of the housing **12**. In addition, the conductor **936** further has a second end **940** that is attached to or otherwise supported by the rotatable member **92** for rotational travel therewith. Thus, when the rotatable member **92** is rotated in a first rotatable direction about the barrel portion **90**, the spirally wound conductor **936** is wound up in a tighter fashion. Conversely, when the rotatable member **92** is rotated in a second rotatable direction, the degree of tightness of the spirally wound conductor **936** may be lessened. In those configurations wherein the rotatable member **92** is removably supported on the barrel portion **90**, the first end **938** of the spirally wound conductor **936** may be removably supported in a slot or other mounting cavity **942** in the barrel portion **90**. See, e.g., FIGS. **36** and **37**. In addition, the primary conductor member **932** may be detachably coupled to the spiral conductor assembly **934** by a connector assembly **933**. In particular, a detachable connector assembly **933** may be employed to couple the primary conductor member **932** to the first end of **938** of the spirally wound conductor **936** to facilitate removal of the rotatable member **92** from the barrel portion **90**. In other arrangements wherein the rotatable portion **92** is not intended to be removed from the barrel portion, the first end **938** of the spirally wound conductor **936** may be non-removably affixed to the barrel portion **90** and the primary conductor member **932** may be permanently affixed (e.g., soldered) to the first end of the spirally wound conductor **936**.

[0363] The second end **940** of the spirally wound conductor **936** may be non-removably affixed to the rotatable member **92** by adhesive, mechanical retainers, snap features, etc. In alternative arrangements, the second end **940** of the spirally wound conductor **936** may be removably supported

in a slot or other mounting feature provided in the rotatable member **92** to facilitate detachment of the spirally wound conductor **936** from the rotatable portion **92**. As can be seen in FIGS. **32** and **33**, a secondary shaft conductor member **944** is attached to the second end **940** of the spiral cable assembly **934**. The secondary shaft conductor member **944** may be supported within the rotatable member **92** and extend through the hollow elongated shaft assembly **16**. For example, the secondary shaft conductor member **944** may extend through the elongated shaft assembly **16** to its distal end to interface with other conductors, sensors, powered components, etc. associated with the surgical end effector, loading unit, etc. attached thereto. Thus, when the clinician rotates the rotatable member **92** relative to the housing **12**, the spiral conductor assembly **934** and more particularly, the spirally wound conductor **936** will wind into a somewhat tighter spiral while facilitating the application of power from the power source **200** to the surgical end effector, loading unit, etc. If the clinician rotates the rotatable member **92** relative to the housing **12** in an opposite direction, the spirally wound cable **936** will somewhat unwind while still facilitating the application of power from the electrical power source **200** to the various components, sensors, etc. on the surgical end effector, loading unit, etc.

[0364] As can be further seen in FIGS. **34** and **35**, the conductor management system **930** may further include a rotation limiter assembly generally designated as **950**. In at least one arrangement, for example, the rotation limiter assembly **950** includes a limiter member **952** that is movably attached to the rotatable member **92** and is configured to threadably engage a threaded portion **99** on the barrel **90** of the housing **12**. The limiter **952** may include a pair of opposing tabs **954** that are on each side of an axial fin portion **958** formed on the rotatable member **92** as shown in FIG. **33**. Such arrangement permits the limiter **952** to move axially within the rotatable member **92** as the rotatable member **92** is rotated on the barrel portion **90** of the housing **12**. The opposite end **960** of the limiter member **952** is configured to threadably engage the threaded portion **99** of the barrel **90**. An inwardly extending proximal stop wall **962** of the rotatable member **92** and an inwardly extending distal stop wall **964** serve to define a travel distance "TD" that the limiter **942** may axially travel as the rotatable member **92** is rotated on the barrel **90**.

[0365] FIG. **33** illustrates the limiter **952** approximately midway between the proximal stop wall **952** and the distal stop wall **954**. When in that position, rotation of the rotatable member **92** in a first direction relative to the barrel portion **90** will result in the axial travel of the limiter in the distal direction "DD" until the limiter **952** contacts the distal stop wall **964** as shown in FIG. **34**. Likewise, rotation of the rotatable member **92** in an opposite direction relative to the barrel portion **90** results in the axial travel of the limiter **952** in the proximal direction "PD" until it contacts the proximal stop wall **962** of the rotatable member **92**. Such arrangement thereby limits the number of times that the rotatable member **92** can be rotated completely around the barrel portion **90** to prevent inadvertent damage of the spiral conductor assembly **934**. For example, the limiter assembly **950** may enable the clinician to rotate the elongated shaft assembly and, more particularly the rotatable member **92** for at least one full revolution but not more than, for example, three full revolutions about the barrel portion **90** in either direction. However, the number of revolutions, or more particularly, the amount of rotatable travel of the rotatable member **92** on the barrel **90** may be adjusted by adjusting the magnitude of the travel distance "TD".

[0366] FIG. **33** illustrates the limiter **952** in a "neutral" or "central" position wherein the limiter is centrally disposed between the distal stop wall **954** and the proximal stop wall **952**. In at least one form, biasing members **980** may be employed to bias the limiter **952** into the neutral position when the elongated shaft assembly **16** and rotatable member **92** are in a corresponding neutral position. When the clinician applies a rotary motion to the rotatable portion **92**, the elongated shaft assembly **16** will rotate in the manner described above. However, when the application of the rotary motion to the rotatable member **92** and elongated shaft assembly **16** is discontinued, the biasing members **980** will return the limiter **952** to the neutral position.

[0367] For example, at least one surgical instrument may comprise a housing that may include a rotatable member that is supported on a mounting portion of the housing for rotation therearound through a range of rotation. An elongated shaft assembly that defines a longitudinal tool axis may be operably coupled to the rotatable member for rotational travel therewith about the longitudinal tool axis. The surgical instrument may further comprise a source of electrical power and include a conductor management system. The conductor management system may comprise a spool conductor assembly that may be supported in the rotatable member and may include a first conductor end that is fixed to the mounting portion of the housing and a second conductor end that is fixed to the rotatable member for rotation therewith through the range of rotation. The conductor management system may further comprise a primary conductor that may be supported within the housing and be configured to transmit electrical power from the source of electrical power to the spool conductor assembly. A shaft conductor may be coupled to the spool conductor assembly for transmitting electrical power to a distal end of the elongated shaft assembly.

[0368] Another surgical instrument example may comprise a housing that includes a rotatable member that is supported on a mounting portion of the housing. The surgical instrument may further comprise an elongated shaft assembly that defines a longitudinal tool axis and which may be operably coupled to the rotatable member for rotational travel therewith about the longitudinal tool axis. The surgical instrument may further comprise a source of electrical power and means for transferring power from the source of electrical power through a conductor that extends through the elongated shaft assembly. The surgical instrument may further comprise means for limiting an amount of rotary travel of the rotatable member about the mounting portion to a range of rotary travel comprising at least one full revolution and not more than three full revolutions about the mounting portion.

[0369] As outlined herein, an end effector can be attached to a surgical instrument. As also outlined herein, the surgical instrument can comprise a firing drive configured to fire staples from an end effector including a staple cartridge. Turning now to the exemplary embodiment depicted in FIG. **94**, for example, a surgical instrument **9000** can comprise a handle **9010** including a housing, a gripping portion **9012**, a firing actuator **9014**, and a motor positioned within the housing. The surgical instrument **9000** can further comprise a shaft **9040** including a firing rod **9020** which can be

advanced distally and/or retracted proximally by the motor. In certain circumstances, an end effector can comprise a distal portion which can articulate relative to a proximal portion about an articulation joint. In other circumstances, an end effector may not have an articulation joint. The surgical instrument can further comprise an articulation drive configured to articulate at least a portion of the end effector. Referring again to the exemplary embodiment depicted in FIG. **94**, for example, the surgical instrument **9000** can comprise an articulation actuator **9070** which can be configured to drive a distal portion of an end effector about an articulation joint. The end effector depicted in FIG. **94**, i.e., end effector **9060**, does not happen to be an articulatable end effector; however, an articulatable end effector could be utilized with the surgical instrument **9000**. In the event that a non-articulatable end effector, such as the end effector **9060**, for example, is used with the surgical instrument **9000**, the operation of the articulation actuator **9070** may not affect the operation of the end effector **9060**.

[0370] Further to the above, an end effector can include drive systems which correspond to the drive systems of the surgical instrument. For instance, the end effector **9060** can include a firing member which can be operably engaged with the firing rod **9020** of the surgical instrument **9000** when the end effector **9060** is assembled to the surgical instrument. Similarly, an end effector can comprise an articulation driver which can be operably engaged with an articulation rod of the surgical instrument when the end effector is assembled to the surgical instrument. Furthermore, the end effector **9060**, for example, can comprise a proximal connection portion **9069** which can be mounted to a distal connection portion **9042** of the shaft **9040** of the surgical instrument **9000** when the end effector **9060** is attached to the surgical instrument **9000**. In various circumstances, the proper assembly of the connection portions, the drive system, and the articulation system of an end effector and a surgical instrument may be required before the end effector can be properly used.

[0371] Referring again to FIG. **94**, the handle **9010** can comprise a firing trigger **9014** which, when actuated by the user of the surgical instrument **9000**, can be configured to operate the motor in the handle **9010**. In various circumstances, the handle **9010** can include a controller which can be configured to detect the actuation of the firing trigger **9014**. In some instances, the actuation of the firing trigger **9014** can close an electrical circuit in signal communication with the controller. In such instances, the controller can be configured to then operate the motor to advance the firing rod **9020** distally and move a jaw **9062** of the end effector **9060** toward a jaw **9064**. In some circumstances, the handle **9010** can include at least one sensor which can be configured to detect the force applied to the firing trigger **9014** and/or the degree to which the firing trigger **9014** is moved. The sensor, or sensors, can be in signal communication with the controller, wherein the controller can be configured to adjust the speed of the motor based on one or more input signals from the sensors. The handle **9010** can comprise a safety switch **9015** which may need to be depressed before the controller will operate the motor in response to input from the firing trigger **9014**. In various circumstances, the safety switch **9015** can be in signal communication with the controller wherein the controller can electronically lockout the use of the motor until the safety switch **9015** is depressed. The handle **9010** may also comprise a retraction actuator **9074** which, when actuated, can cause the motor to be operated in an opposite direction to retract the firing rod **9020** and permit the jaw **9062** to move away from the jaw **9064**. In various circumstances, the actuation of the retraction actuator **9074** can close an electrical circuit in signal communication with the controller. In some instances, the safety switch **9015** may need to be depressed before the controller will operate the motor in its reverse direction in response to input from the retraction actuator **9074**.

[0372] Prior to and/or during the use of the surgical instrument **9000**, the surgical instrument **9000** and/or certain systems of the surgical instrument **9000** may become inoperative, maloperative, and/or defective. In certain circumstances, such deficiencies, and/or the manner by which to resolve them, may not be readily apparent to the user of the surgical instrument which can cause the user to become frustrated. Moreover, such uncertainties can increase the time needed to address the deficiency, or "error". The surgical instrument **9000** is an improvement over the foregoing. Referring again to FIG. **94**, the controller of the surgical instrument **9000** can be configured to detect an error of the surgical instrument **9000** and communicate that error to the user of the surgical instrument **9000** via one or more indicators. The surgical instrument **9000** can comprise one or more indicators which, when activated by the controller, can indicate the nature of the error and/or otherwise direct their attention to the system of the surgical instrument **9000** that is deficient in some way. For instance, the surgical instrument **9000** can comprise an end effector indicator **9086** which can be, for example, configured to indicate that an end effector has not been assembled to the shaft **9040** of the surgical instrument **9010**. In various circumstances, the surgical instrument **9000** can comprise a sensor which can be configured to detect when an end effector has been assembled to the shaft **9040** and/or, correspondingly, when an end effector has not been assembled to the shaft **9040**. The sensor can be in signal communication with the controller such that the controller can receive a signal from the sensor and ascertain whether or not an end effector has been assembled to the shaft **9040**. In the event that the controller ascertains that an end effector has not been assembled to the shaft **9040**, the controller can actuate the end effector indicator **9086**. In various circumstances, the end effector indicator **9086** can comprise a light, such as a red light, for example. In some circumstances, the end effector indicator **9086** can comprise a light emitting diode, such as a red light emitting diode, for example. In addition to or in lieu of the above, the surgical instrument **9000** can comprise a sensor in signal communication with the controller which can be configured to detect when the end effector attached to the shaft **9040** has been previously used. For instance, such a sensor could be configured to ascertain that at least some of the staples stored within the end effector have been fired and/or that a staple firing member within the end effector has been previously advanced. In such instances, the controller can actuate the end effector indicator **9086**. Thus, the activation of the end effector indicator **9086** can signal to the user of the surgical instrument **9000** that some error exists with regard to the end effector and that such error should be, or must be, addressed prior to operating the surgical instrument **9000**. The reader will appreciate from FIG. **94** that the end effector indicator **9086** is adjacent to the distal end of the shaft **9040** and, in various circumstances, can be located on, or near, the distal connection portion **9042** of the shaft **9040**.

In various circumstances, the end effector indicator **9086** could be located on the end effector **9060**. In any event, when the end effector indicator **9086** is illuminated, as a result of the above, the user of the surgical instrument **9000** can quickly ascertain that an error exists and that error pertains to the end effector in some way. The illumination of the end effector indicator **9086** can indicate to the user that the assembly of the end effector to the shaft **9040** may be incomplete and/or that the end effector may need to be replaced.

[0373] In addition to or in lieu of the end effector indicator **9086**, a surgical instrument can comprise one or more indicators. For instance, the surgical instrument **9000** can comprise a firing trigger indicator **9081**. The firing trigger indicator **9081** can be in signal communication with the controller of the surgical instrument **9000** such that, when the controller detects an error related to the firing drive of the surgical instrument **9000**, for example, the controller can activate the firing trigger indicator **9081**. As illustrated in FIG. **94**, the firing trigger indicator **9081** can be positioned adjacent to the firing trigger **9014**. In such circumstances, the user of the surgical instrument **9000**, upon observing the actuation of the firing trigger indicator **9081**, may deduce that an error has occurred related to the firing drive and may begin to diagnose the source of the error. In some circumstances, the controller may activate the firing trigger indicator **9081** when the battery of the surgical instrument **9000** has become defective in some way, for example. For instance, if the voltage of the battery is below a desirable level, the battery may not be able to operate the motor in a desired manner and the firing trigger indicator **9081** may indicate the need to replace the battery, for example. In various circumstances, the controller can currently render one or more operating systems of the surgical instrument **9000** inoperative when the controller illuminates an indicator, such as the end effector indicator **9086** and/or the firing trigger indicator **9081**, for example. For instance, the controller can be configured to operably decouple the firing trigger **9014** from the motor such that the actuation of the firing trigger **9014** does not operate the motor when the end effector indicator **9086** and/or the firing trigger indicator **9081** is illuminated, for example. Such an operative decoupling of the firing trigger **9014** from the motor can also indicate to the user of the surgical instrument **9000** that the surgical instrument may have experienced an error and that the user should review the indicators of the surgical instrument **9000** to ascertain the nature of that error.

[0374] Referring again to the exemplary embodiment of FIG. **94**, the surgical instrument **9000** can comprise a retraction actuator indicator **9085** positioned adjacent to the retraction actuator **9074**. Similar to the above, the retraction actuator indicator **9085** can be in signal communication with the controller wherein, in the event the controller detects an error in connection with the retraction drive, for example, the controller can illuminate the retraction actuator indicator **9085**. In various circumstances, the controller can illuminate the retraction actuator indicator **9085** in the event that the safety switch **9015** is not depressed prior to actuating the retraction actuator **9074**. In such circumstances, the retraction actuator indicator **9085** can serve as a reminder to depress the safety switch **9015**. In certain circumstances, the surgical instrument **9000** can comprise a safety switch indicator **9082** positioned adjacent to the safety switch **9015**. In some circumstances, the controller of the surgical instrument **9000** can illuminate the safety switch indicator **9082** when the user actuates the retraction actuator **9074** before actuating the safety switch **9015**. The safety switch indicator **9082** can be in signal communication with the controller wherein, in the event that the controller detects that the firing system cannot be switched between a firing mode and a retraction mode, for example, the controller can illuminate the safety switch indicator **9082**. The surgical instrument **9000** can comprise an articulation actuator indicator **9084** positioned adjacent to the articulation actuator **9070**. Similar to the above, the articulation actuator indicator **9084** can be in signal communication with the controller wherein, in the event the controller detects an error in connection with the articulation drive, for example, the controller can illuminate the articulation actuator indicator **9084**. The surgical instrument **9000** can comprise a shaft indicator **9083** positioned adjacent to a shaft connection configured to attach the shaft **9040** to the handle **9010**. Similar to the above, the shaft indicator **9083** can be in signal communication with the controller wherein, in the event the controller detects an error in connection with the shaft **9040**, for example, the controller can illuminate the shaft indicator **9083**.

[0375] Turning now to FIG. **95**, a surgical instrument **9100** can include a handle **9110** including an array of indicators **9190** configured and operated to indicate to the user of the surgical instrument **9100** that one or more errors may exist with regard to the surgical instrument **9100** and/or the end effector attached thereto. The array of indicators **9190** can be arranged in any suitable manner. In various circumstances, the array of indicators **9190** can be arranged in the shape of, or the approximate shape of, the surgical instrument **9100** and/or an end effector attached thereto, for example. In at least one instance, the outer surface of the handle **9110**, for example, can include a representation of the surgical instrument **9100** and/or the end effector attached to the surgical instrument. The array of indicators **9190** can be arranged relative to an outline of the surgical instrument and the end effector in a manner configured to convey the portion of the surgical instrument **9100** and/or end effector which is experiencing an error, has experienced an error, and/or may need to be evaluated to address an error, for example. For instance, the outline can be demarcated to depict the end effector **9060**, the shaft **9040**, the handle **9010**, the firing trigger **9014**, the safety switch **9015**, the reverse actuator **9074**, and/or the articulation actuator **9070**. In various circumstances, an end effector indicator **9192** can be positioned adjacent the depiction of the end effector **9060**, a shaft indicator **9193** can be positioned adjacent the depiction of the shaft **9040**, a firing trigger indicator **9191** can be positioned adjacent the depiction of the firing trigger **9014**, a safety switch indicator **9195** can be positioned adjacent the depiction of the safety switch **9015**, a reverse actuator indicator **9196** can be positioned adjacent the depiction of the reverse actuator **9074**, and/or an articulation actuator indicator **9194** can be positioned adjacent the depiction of the articulation actuator **9070**, for example. In various circumstances, each of the indicators **9191**, **9192**, **9193**, **9194**, **9195**, and/or **9196** can comprise a light emitting diode. In some circumstances, each light emitting diode can comprise a red light emitting diode which can be illuminated by the controller to indicate the presence of an error. In various circumstances, the controller can be configured to pulse the illumination of a light emitting diode which may decrease the time needed for the user to realize that an indicator has

been illuminated. In certain circumstances, each indicator can include a light emitting diode which can emit more than one color. In some circumstances, each such light emitting diode can be configured to selectively emit a red color and a green color, for example. The controller can be configured to illuminate the light emitting diode with the green color if no error is not detected with regard to the associated portion of the surgical instrument **9100** and/or end effector attached thereto or, alternatively, with the red color if an error is detected with regard to the associated portion of the surgical instrument **9100** and/or the end effector attached thereto.

[0376] In some circumstances, as described in greater detail further below, the controller of the surgical instrument **9000** can lock out one or more of the actuators of the surgical instrument, such as firing trigger **9014**, retraction actuator **9074**, and/or articulation actuator **9070**, for example, when the controller illuminates an indicator associated with that actuator. For instance, the controller can lock out the firing trigger **9014** when it illuminates the firing trigger indicator **9081**, the retraction actuator **9074** when it illuminates the retraction actuator indicator **9085**, and/or the articulation actuator **9070** when it illuminates the articulation actuator indicator **9084**. The handle **9010** of the surgical instrument **9000**, for example, can comprise a firing trigger lock which can be configured to selectively 'lock out' the firing trigger **9014** and prevent the firing trigger **9014** from being actuated. The firing trigger lock can prevent the firing trigger **9014** from being sufficiently actuated to operate the motor of the surgical instrument. In at least one such circumstance, the firing trigger **9014** can be prevented from closing a firing trigger switch. In certain circumstances, the controller of the surgical instrument **9000** can be configured such that it electronically locks out the firing trigger **9014**, i.e., prevents battery power from being supplied to the motor, in addition to actuating the firing trigger lock. In such circumstances, the electronic lock out and the mechanical lock out may be redundant; however, the mechanical lock out can provide feedback to the user of the surgical instrument **9000** that the firing drive has been operably deactivated. As mentioned above, the controller of the surgical instrument **9000** can also provide feedback via the firing trigger indicator **9081**, for example. In such a way, a user of the surgical instrument **9000** can be provided with tactile feedback and/or visual feedback that an error has occurred. In some circumstances, the tactile feedback may prompt the user of the surgical instrument **9000** to begin searching for the visual feedback. For instance, the user may attempt to actuate the firing trigger **9014** and, upon being unable to actuate the firing trigger **9014**, the user may then review the instrument for illuminated indicators. In any event, once the error has been resolved, the controller can unlock the firing trigger **9014** by deactivating the firing trigger lock.

[0377] Turning now to FIG. **100**, the surgical instrument **9000** can include a firing trigger lock **9390** which can be configured to lock out the firing trigger **9014**. The firing trigger lock **9390** can be movable between a locked condition, illustrated in FIGS. **100**, **101**, and **103**, and an unlocked condition, illustrated in FIG. **102**. When an end effector is not assembled to the shaft **9040** of the surgical instrument **9000**, the firing trigger lock **9390** can be biased into its locked condition. In this locked condition, the firing trigger lock **9330** can block, or at least substantially block, the actuation of the firing trigger **9014**. More particularly, the firing trigger lock **9390** can include a shaft rack **9391**, a pinion **9392**, and a handle rack **9393**, and a biasing member, such as a spring, for example, which can be configured to bias the shaft rack **9391** into a proximal position and the handle rack **9393** into a downward position. The proximal position of the shaft rack **9391** and the downward position of the handle rack **9393** are illustrated in FIG. **101**. Referring primarily to FIG. **101**, the handle rack **9393** can include apertures **9396** and the firing trigger **9014** can include projections **9395** which, when the handle rack is in its downward position, are not aligned with the apertures **9396**. More specifically, the firing trigger **9014** can comprise a rocker switch including a fulcrum **9397** wherein, when the handle rack **9393** is in its downward position, rocking of the firing trigger **9014** will cause at least one of the projections **9395** extending from the firing trigger **9014** to abut the handle rack **9393** and prevent the firing trigger **9014** from being completely actuated.

[0378] When an end effector is attached to the shaft **9040**, further to the above, the firing trigger lock **9390** can be moved between its locked configuration and its unlocked configuration. In the unlocked configuration of the firing trigger lock **9390**, referring primarily to FIG. **102**, the handle rack **9393** can be in its upward position. In the upward position of the handle rack **9393**, the apertures **9396** defined in the handle rack **9393** are aligned with the projections **9395** extending from the firing trigger **9014**. In such circumstances, the firing trigger **9014** can be rocked to actuate the firing trigger **9014**. More specifically, the projections **9395** can pass through the apertures **9396** to permit the rocking of the firing trigger **9014** about the fulcrum **9397**. Thus, in view of the above, the movement of the handle rack **9393** between its downward and upward positions respectively locks and unlocks the firing trigger **9014**. Various mechanisms can be utilized to move the handle rack **9393** between its downward position and its upward position. In at least one such embodiment, referring again to FIG. **100**, the shaft **9040** can include a firing lock actuator **9399** which can be displaced proximally by an end effector when the end effector is assembled to the shaft **9040**. The shaft rack **9391** can be mounted and/or extend proximally from the firing lock actuator **9399** and can include teeth **9391***a* defined thereon. The teeth **9391***a* can be meshingly engaged with teeth **9392***a* defined on pinion gear **9392** such that, when the firing lock actuator **9399** and the shaft rack **9391** are displaced proximally, the pinion gear **9392** can be rotated about an axis. Correspondingly, the handle rack **9393** can comprise rack teeth **9393***a* defined thereon which are also meshingly engaged with the pinion gear teeth **9392***a* and, thus, when the shaft rack **9391** is driven proximally, the handle rack **9393** can be driven from its downward position into its upward position thereby unlocking the firing trigger **9014**. In order to return the handle rack **9393** to its downward position, the shaft rack **9391** can be moved distally to rotate the pinion gear **9392** in the opposite direction. In various circumstances, the shaft rack **9391** can move distally as a result of an end effector being disassembled from the shaft **9040**.

[0379] Turning now to FIGS. **96-97**, handle **9010**, for example, can include a trigger lock **9290**. The trigger lock **9290** can comprise a housing **9291**, a deployable lock pin **9292**, a retainer **9293**, and a biasing member **9294** configured to move the lock pin **9294** between an undeployed position, illustrated in FIGS. **96** and **98** and a deployed position, illustrated in FIGS. **97** and **99**. In various instances,

the retainer **9293** can be comprised of a temperature sensitive material which is affected by heat. In at least one such instance, the temperature sensitive material can be configured to transition between a solid and a fluid, such as a liquid, suspension, and/or gas, for example, and/or between a solid material and semi-solid material, for example. When the temperature sensitive material transitions, or at least partially transitions, between a solid and a fluid, the retainer **9293** can release the lock pin **9294** to lock the firing trigger, and/or any other suitable trigger, of the handle **9010**. In various instances, the lock pin **9294**, when deployed, can slide behind and/or otherwise engage the firing trigger. A handle can include any suitable number of trigger locks **9290**, or the like, to selectively lock out any suitable number of triggers and/or buttons, for example. As the reader will appreciate, the trigger lock **9290** may not be resettable. In such instances, an actuated trigger lock **9290** may permanently lock out the firing trigger, for example, of the handle such that the instrument may no longer be used. A permanent lock out of the firing trigger, and/or any other trigger, of the instrument may mean that the instrument may no longer be usable whatsoever while, in other circumstances, the permanent lock out may not be readily resettable and may require the instrument to be sent to a qualified technician, or facility, for example, who can assess whether the instrument should be reconditioned and reused or whether the instrument should be disposed of When the heat sensitive material of the retainer **9293** has been at least partially converted to a fluid, it may be assumed by the technician that the instrument was exposed to a temperature which exceeded the transition temperature of the heat sensitive material. In various instances, the transition temperature of the heat sensitive material can be the temperature in which the solid material, for example, liquefies, evaporates, and/or sublimates, for instance. In any event, the heat sensitive material, and, hence, the transition temperature, of the retainer **9293** can be selected such that the release of the lock pin **9294** can indicate that the surgical instrument has been exposed to a temperature which exceeds a certain, or threshold, temperature. In various instances, a surgical instrument can be damaged if it is exposed to an excessive temperature. For instance, the surgical instrument can include solid state electronics, for example, which can be damaged when exposed to such an excessive temperature. In such instances, the threshold temperature of the instrument and the transition temperature of the retainer **9293** can be equal, or at least substantially equal, wherein, as a result, it can be assumed that the instrument has not been exposed to a temperature which exceeds the threshold temperature when the trigger lock **9290** has not been actuated and, correspondingly, that the instrument has been exposed to a temperature which exceeds the threshold temperature when the trigger lock **9290** has been actuated and, as such, the surgical instrument may have been damaged, or may at least require an evaluation as to whether it has been damaged.

[0380] Further to the above, a surgical instrument may be exposed to temperatures which exceed the threshold temperature and/or the transition temperature when the surgical instrument is sterilized. Many sterilization procedures are known, several of which include the step of exposing the surgical instrument to heat. In addition to or in lieu of the trigger lock **3290**, a surgical instrument can include at least one temperature sensor which can evaluate the temperature in which the surgical instrument is exposed to. In various instances, the temperature sensor, or sensors, can be in signal communication with a controller of the surgical instrument which can be configured to assess whether the surgical instrument has been exposed to a temperature which exceeds the threshold temperature. In at least one such instance, the controller can include a microprocessor and an algorithm which can evaluate the signals received from the temperature sensor, or sensors. In the event that the controller determines that the threshold temperature has been reached and/or exceeded, the controller can permanently prevent the instrument from being operated. Stated another way, the controller can apply an electronic lock out to the surgical instrument. Similar to the above, a permanent lock out of the instrument may mean that the instrument may no longer be usable whatsoever while, in other circumstances, the permanent lock out may not be readily resettable and may require the instrument to be sent to a qualified technician, or facility, for example, who can assess whether the instrument should be reconditioned and reused or whether the instrument should be disposed of. As the reader will appreciate, a power source may be needed to operate the controller and/or sensors of the surgical instrument while the surgical instrument is being sterilized. Several embodiments of surgical instruments include a removable battery, or power source, which is removed prior to sterilizing the surgical instrument wherein, in such instances, the removable battery is sterilized and/or reprocessed separately. Once the removable power source has been removed from these previous instruments, as the reader will appreciate, the controller and/or sensors may not have sufficient power to monitor the temperature of the surgical instrument. Embodiments of surgical instruments disclosed herein can include a battery, or power source, which is not removed from the surgical instrument when it is reprocessed. Such a battery may be referred to as a permanent battery as it may supply power to the controller and/or temperature sensors while the instrument is being sterilized. In various instances, an instrument including a permanent battery may also include a removable and/or rechargeable battery. In any event, the instrument may have sufficient power to detect and record the temperature that the instrument is exposed to. In at least one instance, the controller of the instrument can include a memory chip configured to store the temperature readings, such as in a temperature register, for instance. In various circumstances, the controller can record readings from the sensors intermittently, i.e., at an appropriate sampling rate. In some instances, the controller can be configured such that, when it records a temperature reading above a certain temperature, albeit below the threshold temperature, the controller can increase the sampling rate. Correspondingly, the controller can be configured such that, when it subsequently records a temperature reading below the certain temperature, the controller can decrease the sampling rate, such as back to its original sampling rate, for instance.

[0381] Turning now to FIG. **99**A, an algorithm for the controller is depicted. In certain instances, this algorithm can comprise a start-up procedure for the surgical instrument such as when the surgical instrument is first used after it has undergone a sterilization process, for instance. The start-up procedure can commence after the instrument has been turned on. The instrument can be automatically turned on when an end effector is assembled to the instrument. In at least one such instance, the assembly of the end effector to the surgical instrument can close a switch in signal com-

munication with the controller. In addition to or in lieu of the above, the instrument can be turned on when a button and/or switch is depressed on the handle, for example. In any event, the controller can then evaluate temperature readings stored in the memory chip, discussed above. For instance, the controller can evaluate whether any of the stored temperature readings are equal to or greater than the threshold temperature. If the controller determines that all of the stored temperature readings are below the threshold temperature, the controller can proceed with its normal startup procedure. If the controller determines that one or more stored temperature readings are equal to or exceed the threshold temperature, the controller can proceed with an alternate procedure. In at least one instance, the controller can permanently disable the instrument such as by implementing an electronic lockout and/or a mechanical lockout, as discussed elsewhere in this application. In certain other instances, the controller can permit the instrument to be used eventhough the controller has determined that one or more stored temperature readings is equal to or exceeds the threshold temperature. The controller can store that determination in its memory and/or indicate to the user through a display, such as a light emitting diode, for example, that the threshold temperature had been previously exceeded and then proceed with its normal startup procedure. In various instances, the controller can treat the threshold temperature as an absolute maximum, i.e., a single temperature reading at or above the threshold temperature is sufficient to trigger an alternative startup program or permanently lockout the instrument. In other instances, the controller can be configured to evaluate whether a pattern of temperature readings at or above the threshold temperature is sufficient to trigger an alternative startup program or permanently lockout the instrument as both time and temperature may be factors to consider whether an instrument has been compromised from a sterilization procedure, for example.

[0382] Turning now to FIGS. **104-109**, a surgical instrument, such as the surgical instrument **9000**, for example, can include a handle **9410** including a firing trigger lock system **9490**. The handle **9410** can be similar to the handle **9110** in many respects and such respects are not repeated herein for the sake of brevity. Similar to the above, the firing trigger lock system **9490** can be configured to lock and unlock a firing trigger **9414**. Also similar to the above, the firing trigger lock system **9490** can be biased into a locked condition when an end effector is not assembled to the shaft **9040** of the surgical instrument, as illustrated in FIGS. **104-107**, and moved into an unlocked condition when an end effector is fully assembled to the shaft **9040**, as illustrated in FIGS. **108** and **109**. When an end effector is assembled to the shaft **9040**, further to the above, referring primarily to FIGS. **108** and **109**, the end effector can push the sensing member **9499** proximally. The sensing member **9499** can extend through the shaft **9040** from a distal end of the shaft **9040** to a proximal end thereof. In use, the end effector can abut the distal end of the sensing member **9499** when the end effector is assembled to the shaft **9040** and push the sensing member **9499** proximally, as outlined above. When the sensing member **9499** is pushed proximally, as illustrated in FIGS. **108** and **109**, the sensing member **9499** can contact a swing arm **9486** of the firing trigger lock system **9490** and rotate the swing arm **9486** upwardly. The swing arm **9486** can comprise an end pivotably mounted to the handle housing via a pin **9487** which is configured to permit the swing arm **9486** to rotate about an axis. The swing arm **9486** can further comprise a cam follower portion **9488** which can be contacted by the sensing member **9499**. In use, the sensing member **9499** can move the swing arm **9486** between a downward position and an upward position in order to move the firing trigger lock system **9490** between a locked position and an unlocked position, respectively. The firing trigger lock system **9490** can further include a lock pin **9485** mounted to the swing arm **9486** which can be pulled upwardly when the swing arm **9486** is rotated upwardly and, correspondingly, pushed downwardly when the swing arm **9486** is rotated downwardly. The lock pin **9485** can comprise an upper end pivotably mounted to the swing arm **9486** and a lower end that extends through an aperture **9483** defined in the firing trigger **9481** when the lock pin **9485** is in its downward position. In various circumstances, the aperture **9483** can be defined in an arm **9482** extending from the firing trigger **9414**. When the lock pin **9485** is positioned within the aperture **9483**, the firing trigger **9414** may not be pivoted about its fulcrum **9484** and, as a result, the firing trigger **9414** may not be actuated by the user. When the lock pin **9485** is in its upward position, the lock pin **9485** may not be positioned within the aperture **9483** and, as a result, the firing trigger **9414** may be actuated by the user. When the end effector is disassembled from the shaft **9040**, the sensing member **9499** can be moved from its proximal position to its distal position. Stated another way, without an end effector attached to the shaft **9040**, a biasing member, such as spring **9489**, for example, can bias the swing arm **9486** downwardly and, accordingly, bias the firing trigger lock system **9490** into its locked condition. Moreover, the spring **9489** can apply a biasing force to the sensing member **9499** through the arm **9482** and push the sensing member **9499** distally when an end effector is not assembled to the shaft **9040**.

[0383] Further to the above, the operation of the sensing member **9499** and the firing trigger lock system **9490** can serve to communicate with the user of the surgical instrument. For instance, when an end effector is not assembled to the shaft **9040**, the sensing member **9499** is biased distally and the firing trigger **9414** will be locked out wherein, if the user were to attempt to actuate the firing trigger **9414**, the user would quickly realize that something may be wrong with the firing system of the surgical instrument. In this example, the user would quickly realize that an end effector needs to be assembled to the shaft **9040** in order to use the surgical instrument. In various circumstances, the firing trigger could be locked out if an end effector, although attached to the shaft **9040**, had been used. In at least one such circumstance, the end effector could include a firing member which, when positioned in its proximal-most position, could push a sensing member proximally when the end effector is assembled to the shaft **9040**; however, if such a firing member has already been at least partially advanced when the end effector is assembled to the shaft **9040**, the sensing member may not be pushed proximally and, as a result, the firing trigger may remain locked out. Again, such a firing trigger lock out can communicate to the user that a problem exists with the firing drive; namely, in this circumstance, that the end effector has already been used. Absent such a tactile lockout, the user would experience circumstances in which they are able to depress an actuator without the surgical

instrument responding to the depressed actuator thereby possibly leading to the confusion of the user.

[0384] As discussed above, the assembly of a previously-unfired end effector to the shaft **9040** can push a sensing member proximally to unlock the firing trigger. In various circumstances, the sensing member and the firing trigger lock system can be configured such that the firing trigger is not unlocked until the end effector is completely assembled to the shaft **9040**. In the event that the end effector is only partially assembled to the shaft **9040**, the sensing member may not be sufficiently displaced to unlock the firing trigger. Again, such a firing trigger lockout can communicate to the user that a problem exists with the firing drive; namely, in this circumstance, that the end effector has not been completely assembled to the shaft **9040**.

[0385] As described herein, an end effector can be assembled to surgical instrument which can include a controller configured to identify the end effector. In some instances, the controller can be configured to assess the identity of the end effector when the controller is activated. In certain instances, turning now to FIG. **176**, the controller can be activated when a battery is inserted into the handle. In addition to or in lieu of the above, the controller can be configured to assess the condition of the surgical instrument when the controller is activated. For example, the controller can be configured to assess the position of the closure member of the closing system, the position of the firing member of the firing system, and/or the position of the articulation member of the articulation system. In certain instances, the surgical instrument can include an absolute positioning sensor to detect the position of the firing member. Such a sensor is disclosed in U.S. patent application Ser. No. 13/803,097, entitled ARTICULATABLE SURGICAL INSTRUMENT COMPRISING A FIRING DRIVE, which was filed on Mar. 14, 2013, now U.S. Pat. No. 9,687,230, the entire disclosure of which is incorporated by reference herein. In some instances, the surgical instrument can include an end of stroke register. Such an end of stroke register can comprise a mechanical switch, counter, and/or toggle and/or an electronic switch, counter, and/or toggle including data stored in nonvolatile memory. In such an embodiment, the controller can assess whether the previous firing stroke had been completed. Such embodiments can be helpful in a multitude of situations. For instance, the controller may be accidentally shut off or otherwise lose power during a surgical procedure and, when the controller is reactivated, the controller may not be able to assess whether the instrument is being initialized for the first time or whether the instrument was in the middle of a previous firing stroke. The end of stroke register can assist the controller in discerning between these two events. Moreover, an end of stroke of register that is not lost or reset by a power loss or interruption to the instrument can allow the controller to assess whether the surgical instrument had lost power during a firing stroke. If the controller determines that the previous firing stroke had not been completed, the controller can be configured to, one, permit power to be supplied to the motor to finish the firing stroke and/or, two, permit power to be supplied to the motor to retract the firing member, the closure member, and/or the articulation member to their home, or unactuated, positions. In various instances, the controller can provide the user of the surgical instrument with the option of proceeding with the firing stroke or returning the mechanical systems and/or electrical systems of the instrument to their original, or unactuated, positions. In such embodiments, the surgical instrument may not automatically return these systems to their original, or unactuated, positions. In any event, once the surgical instrument is in its home, or unactuated, condition, a previously fired end effector can be disassembled from the surgical instrument and/or an unfired end effector can be assembled to the surgical instrument. In various instances, as outlined herein, the surgical instrument can then identify, or at least attempt to identify, the unfired end effector.

[0386] Turning now to FIG. **177**, a controller of a surgical instrument can perform a diagnostic check of the instrument and/or battery. For instance, upon activation of the controller, the surgical instrument can evaluate whether the surgical instrument had been exposed to a temperature beyond the threshold temperature of the surgical instrument, as described herein. Also, for instance, the surgical instrument can evaluate the available power, voltage, and/or current of the battery, as also described herein. If the instrument fails one or more of these diagnostic tests, the controller may not supply power to the motor, physically lockout the instrument, and/or indicate such failure to the user of the surgical instrument. In such circumstances, the instrument may record such failures in its memory so that the test data may assist a technician in later evaluating the instrument. Assuming that the instrument passes these diagnostic tests, the instrument, similar to the above, may also record the test data associated with passing the diagnostic tests. In any event, the instrument may then proceed to evaluate whether the instrument is in a home, or unactuated, condition and assess the identity of the end effector. As outlined herein, a procedure for identifying the end effector is disclosed. Also disclosed herein is a procedure for assessing whether a 'smart' end effector or a 'dumb' end effector is attached to the surgical instrument. In various instances, a 'smart' end effector can be an end effector which can supply parameters and/or at least a portion of an operating program to the surgical instrument as part of the identification process. A 'smart' end effector can be an end effector which somehow identifies the manner in which the end effector is to be used by the surgical instrument. In certain instances, a 'dumb' end effector is an end effector which does not identify the manner in which it is to be used with the surgical instrument in any way. An exemplary operating procedure in accordance with the above is outlined in FIG. **178**.

[0387] As discussed herein, a battery can be utilized to power a surgical instrument. In various instances, the surgical instrument and/or battery can be configured to assess whether the battery can supply sufficient power to the surgical instrument to perform one or more functions. In certain instances, the surgical instrument and/or the battery can be configured to indicate to the user of the surgical instrument that the battery has sufficient power to perform one or more functions. FIG. **179** depicts a circuit configured to indicate the voltage of a battery. Such a circuit can be present in the surgical instrument and/or the battery. In either event, a circuit can include a plurality of indicators which can be indicative of the charge, voltage, and/or power that can be supplied by the battery. For instance, the circuit can include three indicators including a first indicator configured to indicate that the battery includes at least a first voltage, a second indicator configured to indicate that the battery includes at least a second voltage, and a third indicator configured to indicate that the battery includes at least a third

voltage. As illustrated in FIG. **179**, a circuit **12100** can include a first indicator circuit **12110**, a second indicator circuit **12120**, and a third indicator circuit **12130** which are arranged in parallel with one another. When switch **12101** is closed, a voltage potential from the battery can be applied across the indicator circuits **12110**, **12120**, and **12130**. The first indicator circuit **12110** can include a Zener diode **12111**, a light emitting diode **12112**, and a resistor R1 **12113**. Similarly, the second indicator circuit **12120** can include a Zener diode **12121**, a light emitting diode **12122**, and a resistor R2 **12123** and the third indicator circuit **12130** can include a Zener diode **12131**, a light emitting diode **12132**, and a resistor R3 **12133**. The Zener diodes **12111**, **12121**, and **12131** can each have a different breakdown voltage. For instance, the first Zener diode **12111** can have a breakdown voltage of 11.5V, for example, the second Zener diode **12121** can have a breakdown voltage of 10V, for example, and the third Zener diode **12131** can have a breakdown voltage of 8V, for example. In such an embodiment, if the voltage of the battery is greater than or equal to 11.5V, the LEDs **12112**, **12122**, and **12132** will be illuminated. The illumination of all of the LEDs can indicate to the user of the surgical instrument that the battery has a full charge and/or at least a sufficient charge to perform any function required by the surgical instrument. If the voltage of the battery is greater than or equal to 10V, but less than 11.5V, the LEDs **12112** and **12122** will be illuminated; however, LED **12132** will not be illuminated. The illumination of LEDs **12112** and **12122**, but not LED **12132**, can indicate to the user of the surgical instrument that the battery has less than a full charge, but at least a sufficient charge to perform any function required by the surgical instrument. If the voltage of the battery is greater than or equal to 8V, but less than 10V, the LED **12112** will be illuminated; however, LEDs **12122** and **12132** will not be illuminated. The illumination of LED **12112**, but not LEDs **12122** and **12132**, can indicate to the user of the surgical instrument that the battery is nearing the end of its charge and may or may not have a sufficient charge to perform certain functions required by the surgical instrument. Such a display of the LEDs can indicate that the battery may need to be replaced. If the voltage of the battery is less than 8V, none of the LEDs **12112**, **12122**, and **12132** will be illuminated. Such a display of the LEDs can indicate that the battery may not be usable to reliably perform any function of the surgical instrument. While circuit **12100** utilizes three indicator circuits **12110**, **12120**, and **12130**, a circuit can include more than three indicator circuits having Zener diodes with different breakdown voltages. Such an embodiment can provide a more finely graduated indication of the voltage of the battery, for instance. Other embodiments are envisioned which utilize only two indicator circuits.

[0388] In various instances, a battery can include a circuit configured to indicate that the battery is charged and/or has a charge sufficient enough that it can be used with a surgical instrument. In certain instances, a surgical instrument can include a circuit configured to indicate that a battery attached thereto is charged and/or has a charge sufficient enough that it can be used with the surgical instrument. In either event, turning now to FIG. **180**, a circuit **12200** can include a microprocessor **12201** which includes one or more gates in communication with the battery, which can be a 9V battery, for example. The circuit **12200** can further comprise a capacitor **12202**, such as a 10 microFarad capacitor, for example, which can receive power from a circuit including diode **12203** and resistor **12204**. The circuit **12200** can further comprise a LED **12205** and a resistor **12206** in the discharge path of capacitor **12202**. Such a circuit can cause the LED **12205** to pulse intermittently so long as the battery can supply sufficient power to the circuit **12200**. In such instances, a user could identify the pulsing LED **12205** and would know that the battery had at least some power, if not sufficient power, to be used with the surgical instrument. If the user does not identify that the LED **12205** is pulsing, the user can assume that the battery lacks sufficient power to be used.

[0389] In various circumstances, as discussed herein and referring to FIG. **284**, a battery and/or a surgical instrument configured to be used with the battery can include a diagnostic circuit configured to evaluate the power, voltage, and/or current that the battery can supply. Turning now to FIG. **184**, a battery diagnostic circuit **12300** is disclosed. Such a circuit can be configured to evaluate the battery before it has been used with a surgical instrument, while it is being used with a surgical instrument, and/or after it has been used with a surgical instrument. In various instances, the battery can be used more than once and, in various instances, the battery may be rechargeable or non-rechargeable. The uses of the battery, and the information obtained during the diagnostic evaluation of the battery, can be stored in a memory chip in the battery and/or the surgical instrument. FIG. **183** depicts a table of information **12400** which is representative of the type of information that could be recorded on the memory chip. For instance, the number of uses can be recorded. For each use, the maximum voltage and/or the maximum current that the battery is charged with, or re-charged with, can be recorded, for instance. For each use, the current capacity, the current used in mA, the current used in Ah, and/or the minimum voltage experienced during use can be recorded, for instance. For each use, the time in which the battery is charged, the time in which the battery is used, the temperature of the battery while being charged, and/or the temperature of the battery while being used can be recorded, for instance. These are merely a few examples of the information that can be stored. In various instances, such information can be utilized by the surgical instrument and/or a technician to evaluate the previous performance of the battery and/or the suitability of the battery for further use, for example.

[0390] In various instances, turning now to FIG. **182**, a battery and/or a surgical instrument used with the battery can include a circuit for turning off the battery once the charge of the battery has fallen below a minimum charge level. In some instances, a lithium ion battery cell may have a thermal incident if it is used below the minimum charge level and a shut-off circuit inhibiting the use of the battery below this minimum charge level may inhibit such a thermal incident from occurring.

[0391] In various instances, turning now to FIG. **181**, a surgical instrument can include a controller configured to perform a diagnostic check of the instrument and/or the battery assembled thereto. For instance, the controller can include a clock and a memory chip configured to evaluate and record when the instrument and/or battery has been used. In certain instances, the controller can be configured to disable the instrument and/or battery if it has been too long since the last time that the instrument and/or battery had been used. In certain instances, the instrument and/or battery can include one or more sensors which can be configured to

evaluate various conditions of the instrument and/or battery, such as the temperature, the humidity, and/or the time in which the instrument and/or battery are exposed to the temperature and/or humidity, for example. The controller can be configured to evaluate whether the sensors are operating correctly and, if not, the controller can disable the instrument and/or battery. The controller can also be configured to evaluate the number of times that the instrument and/or battery have been used and, if the uses exceed a certain amount, disable the instrument and/or battery. The controller can also be configured to evaluate the power that the battery can supply, as outlined herein, and, if the available power is insufficient, disable the instrument and/or battery.

[0392] As described herein, a surgical instrument can include various sensors for gathering feedback and/or other instrument status information. Furthermore, the surgical instrument can include sensory indicators for providing feedback and/or instrument status information to the user. In certain instances, an endoscope can be used in connection with the surgical instrument to provide additional feedback and/or instrument status information to the user. As described herein, the endoscope and the surgical instrument can be in signal communication with a display, which can depict the feedback from the endoscope and/or from the sensors of the surgical instrument, for example. Referring now to FIGS. **75-93**, an endoscope **5018** (FIG. **93**) can be in signal communication with a display **5002** (FIG. **75**). In certain embodiments, the display **5002** can comprise a heads-up display (HUD) and/or a video monitor, for example. Furthermore, the display **5002** can be a plasma screen, an LCD screen, or an electroluminescent screen, for example. In various embodiments, the display **5002** can broadcast a first layer of information **5010**, which can include video feedback, for example. The video feedback can be feedback of images viewed by an endoscope **5018** (FIG. **93**) at a surgical site, for example, and can depict at least a portion of a surgical instrument **5020** as viewed by the endoscope **5018**, for example.

[0393] In various embodiments, the display **5002** can include a touch screen **5004**. Referring primarily to FIG. **75**, a user can interact with the touch screen **5004** to interface with the display **5002** and/or the surgical instrument **5020**. For example, the touch screen **5004** can communicate with the display **5002**, and inputs to the touch screen **5004** can adjust and/or modify the information depicted on the display **5002**. In such embodiments, the user can communicate with the display **5002** without utilizing an additional input to the display, such as a keyboard and/or computer mouse, for example. In other words, additional input tools and/or parts may not be required to adjust and/or modify the information depicted on the display **5002**. Furthermore, in various embodiments, the touch screen **5004** can be easily cleaned and/or sterilized. For example, the touch screen **5004** can include a flat surface that can be easily wiped clean within a surgical suite and/or operating room. Additionally or alternatively, the touch screen **5004** can directly and/or indirectly communicate with the surgical instrument **5020**, such that input to the touch screen **5004** provides input to the surgical instrument **5020**. The user may be a surgeon, operator, and/or assistant, for example.

[0394] In various embodiments, the touch screen **5004** can be positioned over at least a portion of the display **5002**, and may be removably secured to the display **5002**, for example. For example, the touch screen **5004** can be compatible with multiple displays, and can be releasably attached and unattached from at least one display. Furthermore, in certain embodiments, the touch screen **5004** can be an independent display, which can operate independently of the display **5002**. For example, a detachable LCD screen can comprise the touch screen **5004**, and the detachable LCD screen can overlay at least a portion of the display **5002**. In other embodiments, the touch screen **5004** can be integrated into the display **5002**. The touch screen **5004** can utilize resistive technology, capacitive technology, ultrasonic sound beam technology, and/or near field imaging technology, for example.

[0395] Referring primarily to FIG. **93**, in various embodiments, a feedback controller **5016** can be in signal communication with the surgical instrument **5020**, the endoscope **5018**, and/or the display **5002**. In certain embodiments, a wired and/or wireless connection **5017** between the feedback controller **5016** and the endoscope **5018** can provide video feedback from the endoscope **5018** to the feedback controller **5016**. Furthermore, a wired and/or wireless connection **5019** between the feedback controller **5016** and the surgical instrument **5020** and/or the microcontroller of the surgical instrument **5020** can provide the feedback data measured and/or detected by the surgical instrument **5020** to the feedback controller **5016**. For example, various sensors are described herein, as well as in Zemlok '263 and Zemlok '344, the entire disclosures of which have been incorporated herein, and the various sensors can detect feedback and/or instrument status information. Additionally, a wired and/or wireless connection **5015** between the feedback controller **5016** and the display **5002** can provide the feedback data from the surgical instrument **5020** and/or the video feedback from the endoscope **5018** to the display **5002**. In at least one embodiment, the video feedback can be depicted in the first layer of information **5010** on the display **5002**, and the feedback data can be depicted in a second layer of information **5012** on the display **5004**. In embodiments where a detachable LCD display comprising the touch screen **5004** is positioned over the display **5002**, a wired and/or wireless connection between the feedback controller **5016** and the detachable LCD display can provide the feedback data to the detachable LCD display and/or from the LCD display to the feedback controller **5010**, for example.

[0396] Referring primarily to FIG. **76**, the display **5002** can broadcast the first layer of information **5010**, which can comprise the video feedback from the endoscope **5018** (FIG. **93**), for example. In various instances, the video feedback **5010** can include a depiction of the surgical instrument **5020** affecting tissue T. In various embodiments, surgical instrument **5020** can be similar to surgical instrument **10** (FIG. **1**), for example, and the disposable loading unit (DLU) and/or an end effector **5022** coupled to the surgical instrument can be similar to loading unit **20** (FIG. **2**), for example. The DLU **5022** of the surgical instrument **5020** can articulate relative to the tissue T, grasp and/or clamp the tissue T between a pair of jaws, staple the tissue T, and/or cut the tissue T with a cutting element, as described herein. Furthermore, the endoscope **5018**, which can be positioned at and/or near the surgical site, can view the DLU **5022** and can transmit the video feed and/or recording to the feedback controller **5016** (FIG. **93**). In various embodiments, the video feedback in the first layer of information **5010** on the display **5002** can

provide live, visual feedback of the surgical site to the operator of the surgical instrument **5020**.

[0397] Referring primarily to FIG. **77**, the display **5002** can display a second layer of information **5012**. Furthermore, a user can select, move, resize, minimize, expand, modify, and/or otherwise manipulate the second layer of information **5012**. For example, the user can manipulate the second layer of information **5012** by interfacing with the touch screen **5004**. As described herein, the second layer of information **5012** can include feedback data from the surgical instrument **5020** and/or controls for controlling the surgical instrument **5020**. In various embodiments, the second layer of information **5012** can include a control panel **5030**, and the touch screen **5004** can be used to select and/or utilize features of the control panel **5030**. The control panel **5030** can be collapsible, resizable, moveable, and/or otherwise manipulatable by way of the touch screen **5004**. For example, a user can minimize or collapse the control panel **5030** by selecting the minimize/maximize icon **5032**, and can maximize or un-collapse the control panel **5030** by re-selecting the minimize/maximize icon **5032**. Furthermore, a user can move the control panel **5030** on the display **5002** by "dragging and dropping" the control panel **5030** across the display **5002**, for example. Additionally, a user can resize the control panel **5030** relative to the display **5002** by "zooming in" and/or "zooming out" multiple contact points on the touch screen **5004**. A person having ordinary skill in the art will appreciate that various conventional and/or intuitive contacts to the touch screen **5004** can be utilized to modify and/or manipulate the second layer of information **5012** and/or the control panel **5030** thereof, for example.

[0398] Referring still to FIG. **77**, the control panel **5030** can include a plurality of menus, categories, and/or classifications. For example, the control panel **5030** can include an instrument feedback menu **5036**, a display menu **5060**, and/or an instrument controller menu **5070**. A user can utilize the control panel **5030** to select a menu and/or to switch between operational states of the touch screen **5004**. For example, the touch screen **5004** can communicate directives and/or controls to the instrument controller **5016** (FIG. **93**) and/or the microcontroller when a user selects the instrument controller menu **5070** of the control panel **5030**. In such embodiments, as described herein, the touch screen **5004** may operate in an instrument-control state. Furthermore, the settings related to the secondary layer of information **5012** and/or the display **5002**, for example, can be modified by a user when the display menu **5060** is selected from the control panel **5030**. In such embodiments, the touch screen **5004** may operate in a setting-modification state. Additionally or alternatively, the feedback data included in the secondary layer of information **5012** can be modified by a user when the instrument feedback menu **5036** is selected. In such embodiments, the touch screen **5004** may operate in a feedback-manipulation state. In various embodiments, the control panel **5030** can include additional and/or fewer menus, categories, and/or classifications. Furthermore, the various menus, categories, and/or classifications of the control panel **5030** can be modified according to the user's preferences, for example. The menus, categories, and/or classifications can be verbally and/or symbolically indicated in the second layer of information **5012**. In various embodiments, the categories under each menu **5036**, **5060**, **5070** may be selectively depicted in the second layer of information **5012**. For example, the categories under each menu **5036**, **5060**, **5070** may only be depicted in the second layer of information **5012** when the respective overlying menu **5036**, **5060**, **5070** is selected by the user. In other embodiments, the user can manually minimize and/or maximize categories and/or subcategories corresponding to each menu **5036**, **5060**, and/or **5070**, for example.

[0399] Still referring to FIG. **77**, the instrument feedback menu **5036** can include a plurality of feedback categories, and can relate to the feedback data measured and/or detected by the surgical instrument **5020** (FIG. **93**) during a surgical procedure. As described herein, the surgical instrument **5020** can detect and/or measure the position of a moveable jaw between an open orientation and a closed orientation, the thickness of clamped tissue, the clamping force on the clamped tissue, the articulation of the DLU **5022**, and/or the position, velocity, and/or force of the firing element, for example. Furthermore, the feedback controller **5016** (FIG. **93**) in signal communication with the surgical instrument **5020** can provide the sensed feedback to the display **5002**, which can display the feedback in the second layer of information **5012**. As described herein, the selection, placement, and/or form of the feedback data displayed in the second layer of information **5012** can be modified based on the user's input to the touch screen **5004**, for example.

[0400] In various embodiments, the display menu **5060** of the control panel **5030** can relate to a plurality of categories, such as unit systems **5062** and/or data modes **5064**, for example. In certain embodiments, a user can select the unit systems category **5062** to switch between unit systems, such as between metric and U.S. customary units, for example. Additionally, a user can select the data mode category **5064** to switch between types of numerical representations (FIGS. **79-81**) of the feedback data and/or types of graphical representations (FIGS. **82-83**) of the feedback data, for example. The numerical representations of the feedback data can be displayed as numerical values and/or percentages, for example. Furthermore, the graphical representations of the feedback data can be displayed as a function of time (FIG. **82**) and/or distance (FIG. **83**), for example. As described herein, a user can select the instrument controller menu **5070** from the control panel **5030** to input directives for the surgical instrument **5020** (FIG. **93**), which can be implemented via the instrument controller **5016** (FIG. **93**) and/or the microcontroller, for example.

[0401] Referring now to FIG. **78**, the second layer of information **5012** can overlay at least a portion of the first layer of information **5010** on the display **5002**. Furthermore, the touch screen **5004** can allow a user to manipulate the second layer of information **5012** relative to the video feedback in the underlying first layer of information **5010** on the display **5002**. For example, a user can operate the touch screen **5004** to select, manipulate, reformat, resize, and/or otherwise modify the information displayed in the second layer of information **5012**. In certain embodiments, the user can use the touch screen **5004** to manipulate the second layer of information **5012** relative to the surgical instrument **5020** depicted in the first layer of information **5010** on the display **5002**. A user can select a menu, category and/or classification of the control panel **5030** thereof, for example, and the second layer of information **5012** and/or the control panel **5030** can be adjusted to reflect the user's selection. In various embodiments, a user may select a category from the instrument feedback category **5036** that corresponds to a

specific feature or features of the surgical instrument **5020** depicted in the first layer of information **5010**. Feedback corresponding to the user-selected category can move, locate itself, and/or "snap" to a position on the display **5002** relative to the specific feature or features of the surgical instrument **5020**. For example, the selected feedback can move to a position near and/or overlapping the specific feature or features of the surgical instrument **5020** depicted in the first layer of information **5010**.

[0402] Referring to FIGS. **79** and **80**, if a user selects the knife progression category **5040** from the instrument feedback menu **5036**, for example, the sensed data and/or information related to the progression of the knife can move and/or "snap" to a position in the second layer of information **5012** relative to the knife of the DLU **5022** depicted in the first layer of information **5010**, for example. Furthermore, the control panel **5030** can be collapsed and/or minimized after the user selects the desired category or categories from the instrument feedback menu **5036**. Feedback data **5052** related to the progression of the knife can be depicted on the display **5002** near the detected knife of the DLU **5022** depicted in the first layer of information **5010**, and can move between a first position (FIG. **79**) when the knife is near the beginning of the firing stroke and a second position (FIG. **80**) when the knife is near the distal end of the firing stroke, for example, as the knife translates and/or moves through the DLU **5022**. For example, when the knife has translated a distance X mm, the data **5052** related to the knife's progression can be positioned in the first position (FIG. **79**), and, when the knife has translated a distance Y mm, the data **5052** related to the knife's progression can be positioned in the second position (FIG. **80**). In such embodiments, the operator may track the progression of the knife during the firing stroke by viewing the feedback data **5052** on the screen **5002**. For example, when the knife of the DLU **5022** is blocked from view by the end effector jaws **5024** and/or tissue T, for example, the operator can track and/or approximate the position of the knife in the DLU **5020** based on the changing value of the feedback data **5052** and/or the shifting position of the feedback data **5052** relative to the DLU **5022** depicted in the underlying first layer of information **5010**. Furthermore, the display **5002** can incorporate a numerical representation of the knife's progression, as well as a pictorial and/or symbolic representation of the knife's progression. For example, a symbol **5054**, such as an arrow, for example, can move and/or extend relative to the DLU **5022** depicted in the underlying first layer of information **5010** to show the progression of the knife through the DLU **5022**. Referring still to FIGS. **79** and **80**, for example, the symbol **5054** can extend distally as the knife advances distally from a position near the beginning of the firing stroke (FIG. **79**) to a position near the distal end of the firing stroke (FIG. **80**), for example.

[0403] In various embodiments, a user can select one or more different categories of feedback data from the instrument feedback menu **5036**, and the different categories of feedback data can be displayed in the second layer of information **5012** on the display **5002**. In such embodiments, when a user selects a different category of feedback data from the instrument feedback menu **5036**, a numerical and/or symbolic representation of the feedback data can move to an appropriate position on the display **5002** relative to the DLU **5022** depicted in the underlying first layer of information **5010**. For example, if a user selects the jaw position category **5038** from the instrument feedback menu **5036**, feedback data related to the position of a moveable jaw between an open position and a clamped position can be displayed in the second layer of information **5012**, and can move to a position near the moveable jaw(s) **5024** of the surgical instrument **5020** on the display **5002**, for example. Furthermore, if the knife speed category **5042** is selected, feedback data **5058** (FIG. **82**) related to the velocity of the knife can be displayed in the second layer of information **5012**, and can move to a position near the knife in the DLU **5022** on the display **5002**, similar to the numerical data **5052** and/or the symbol **5054** discussed above. If the tissue thickness category **5044** is selected by a user, feedback data related to the detected tissue thickness can be displayed in the second layer of information **5012**, and can move to a position near the measured tissue T on the display **5002**, for example. Furthermore, in at least one embodiment, the second layer of information **5012** can include a scale and/or a ruler, which can illustrate the detected tissue thickness. The user can move the ruler via the touch screen **5004** relative to the underlying tissue T depicted in the first layer of information **5010**, which may facilitate the user's appreciation of the tissue thickness variations, for example. If a user selects the end effector articulation category **5046**, feedback data **5252** (FIGS. **84-88**) related to the articulation of the DLU **5022** can be displayed in the second layer of information **5012**, and can move to a position near the articulation joint **5026** (FIGS. **84** and **85**) of the DLU **5022** on the display **5002**, for example. If a user selects the firing force category **5048**, the feedback data related to the firing force exerted on the tissue by the knife can be displayed in the second layer of information **5012**, and can be positioned near the knife of the DLU **5022** on the display **5002**, for example. Additionally, the feedback data related to the firing force exerted by the knife can move in the second layer of information **5012** as the knife moves relative to the DLU **5022**, for example, during a firing stroke. Furthermore, if the clamping force category **5050** is selected, feedback data **5158** (FIG. **83**) related to the clamping force on the tissue T can be depicted in the second layer of information **5012**, and can move near the DLU **5022** depicted in the underlying first layer of information **5010**. In such embodiments, the feedback data **5158** related to the clamping force can show variations in the clamping pressure along the length and/or width of the DLU **5022**, during clamping, and/or throughout a firing stroke, for example.

[0404] In various embodiments, the feedback depicted in the second layer of information **5012** can move with the corresponding feature of the surgical instrument **5020** in the first layer of information **5010**. For example, as the DLU **5022** is manipulated around the surgical site, the DLU **5022** may move around the display **5002**. In such embodiments, the feedback related to the DLU **5022**, such as the jaw position and/or the articulation data, for example, can move along with the DLU **5022**. Movement of the relevant feedback may ensure the feedback remains in the operator's field of vision without requiring the operator to move their eyes away from the corresponding feature of the surgical instrument **5020** depicted in the first layer of information **5010** on the display **5002**. Furthermore, the movement of the relevant feedback may ensure the feedback does not block the feature(s) of the surgical instrument **5020** depicted in the first layer of information **5010** that the operator desires to view on the display **5002**.

[0405] In certain embodiments, a user can select multiple feedback categories to view on the display **5002** simultaneously. Furthermore, the selected feedback(s) can be automatically arranged on the display **5002** to display the relevant data in a non-overlapping arrangement in the second layer of information **5012**. In other words, feedback displayed in the second layer of information **5012** may not overlap other feedback displayed in the second layer of information **5012**; however, such feedback may overlap the video feedback of the first layer of information **5010** displayed on the display **5002**, for example. In various embodiments, when the feedback data moves and/or "snaps" to a position on the screen relative to the surgical instrument **5020** depicted in the underlying first layer of information **5010**, the user can override the default position by "dragging and dropping" the feedback data elsewhere in the second layer of information **5012**.

[0406] Referring now to FIG. **81**, a symbolic representation **5056** of the progression of the knife, such as a cross, bulls-eye, and/or pictorial representation of the knife and/or knife edge, for example, can move to a position in the second layer of information **5012** that overlaps the position of the knife depicted in the first layer of information **5010**. In certain embodiments, even when the knife is not visible on the display **5002**, for example, if the view of the knife is obstructed, the symbolic representation **5056** of the knife can move and/or follow the detected position of the knife in the DLU **5022** on the screen **5002**. For example, the symbolic representation **5056** can be in a first position relative to the DLU **5022** near the beginning of the firing stroke, and the symbolic representation **5056** move to a second position relative to the DLU **5022** near the end of the firing stroke.

[0407] In various embodiments, feedback selected by the user via the touch screen **5004**, can "snap" to a corner, edge and/or other predetermined location on the display **5002**. For example, referring still to FIG. **81**, numerical data **5052** related to the knife's progression can move to a corner of the display **5002**. Additionally or alternatively, a user can interface with the touch screen **5004** to move the numerical data **5052** to a different position on the touch screen **5004**. Based on the position of the underlying surgical instrument **5020** in the first layer of information **5010**, the user may move the numerical data **5052** to a position in the second layer of information **5012** such that a corresponding and/or specific feature of the DLU **5022** is not blocked and/or obstructed by the numerical data **5052**. Additionally or alternatively, the user may move the numerical data **5052** to a position near the corresponding feature of the DLU **5022**, such that the user can easily view the corresponding DLU **5022** feature and the numerical data **5052** simultaneously.

[0408] Referring to FIGS. **84** and **85**, a symbolic representation **5254** (FIG. **85**) of feedback data from the feedback controller **5016** (FIG. **93**) can be included I the second layer of information **5012**. For example, a symbolic representation **5254** of the articulation of the DLU **5022**, such as a subtended angle and/or arc, for example can be depicted in the second layer of information **5012**, and can move to a position on the display **5002** near and/or overlapping the articulation joint **5026** of the surgical instrument **5020** depicted in the first layer of information **5010**. For example, a subtended arc can extend between an axis A defined by the non-articulated DLU **5022** (FIG. **84**) and an axis A' defined by the articulated DLU **5022** (FIG. **85**). In certain embodiments, even when the articulation joint **5026** is not visible on the screen, the symbolic representation **5254** of the articulation angle can be visible in the second layer of information **5012**. For example, if the articulation joint **5026** is not positioned within the endoscope's field of view and/or is obstructed or blocked, the symbolic representation **5254** of the articulation angle can provide a visible indication of articulation to the user. In various embodiments, the symbolic representation **5252** can adjust and/or change as the DLU **5022** moves and/or articulates. For example, the symbolic representation **5254** can be an arrowed arc or line, which can extend from the initial and/or non-articulated position of the DLU **5022** (FIG. **84**) toward the articulated position of the DLU **5022** (FIG. **85**) as detected by the instrument **5020**. Furthermore, in various embodiments, the symbolic representation **5254** can "snap" to a position relative to the DLU **5022** depicted in the first layer of information, such that the symbolic representation **5254** overlaps and/or is aligned with the DLU **5022**. For example, referring primarily to FIG. **85**, the symbolic representation **5254** of the articulation angle can move at and/or near the articulation joint **5026** depicted in the first layer of information **5010** on the display **5002**, and can lengthen between the axis A defined by the DLU **5022** in the initial and/or non-articulated position and the axis A' defined by the DLU **5022** as the DLU **5022** articulates.

[0409] Furthermore, in various embodiments, numerical data **5252** related to the articulation of the DLU **5022** can be displayed in the second layer of information **5012** on the display **5002**. Furthermore, the data **5252** can change as the DLU **5022** articulates. For example, the second layer of information **5012** can depict an articulation of X° before the DLU **5022** articulates (FIG. **84**), and can depict an articulation of Y° after the DLU **5022** articulates (FIG. **85**). In various embodiments, the feedback data **5252** related to the articulation of the DLU **5022** can be displayed in the second layer of information **5012** at and/or near the articulation joint **5026** of the surgical instrument **5020** depicted in the first layer of information **5010**, for example. A user can utilize the touch screen **5004** to move, resize, minimize, and/or otherwise manipulate the articulation data **5252** displayed in the second layer of information **5012** relative to the video feedback displayed in the first layer of information **5010**, for example. Additionally or alternatively, a user can interface with the touch screen **5004** to move the symbolic representation **5254** and/or the numerical data **5252** to a different position on the touch screen **5004**. Based on the position of the underlying surgical instrument **5020** in the first layer of information **5010**, the user may move the numerical data **5252** to a position in the second layer of information **5012** such that specific feature(s) of the DLU **5022** are not blocked and/or obstructed by the numerical data **5252**. Additionally or alternatively, the user may move the numerical data **5252** to a position near the corresponding feature(s) of the DLU **5022**, such that the user can easily view the corresponding DLU **5022** feature(s) and the numerical data **5252** simultaneously.

[0410] Referring now to FIG. **82**, a graphical representation can be selected from the display menu **5060** of the control panel **5030** by way of the touch screen **5004**, for example. In such embodiments, a graphical representation of feedback **5058** can be displayed in the second layer of information **5012** on the display **5002**. A user may select the graphical representation to view measured and/or sensed data from the surgical instrument **5020** and/or the controller

thereof relative to time and/or space. For example, a user may desire to observe the velocity of the firing element throughout the firing stroke, and thus, may select the knife speed category **5042** (FIG. **78**) from the instrument feedback menu **5036** (FIG. **78**). In such embodiments, the graphical representation **5058** of the speed of the knife can continue to gain data points and grow during the firing stroke, for example. In various embodiments, at the completion of the firing stroke, the graphical representation **5058** can depict a "soft" start period **5057** and/or a "soft" stop period **5059** of the knife. Furthermore, the graphical representation **5058** can be positioned on the display **5002** such that the velocity of the knife at a specific location along the length of the end effector jaws **5024** corresponds to that specific location along the length of the end effector jaws **5022** depicted in the first layer of information **5010**. For example, the graphical representation **5058** can begin at and/or near the beginning of the knife's path through the DLU **5022** depicted in the first layer of information **5010**, and can end at and/or near the end of the knife's path through the DLU **5022** depicted in the first layer of information **5010**, for example. Furthermore, as described herein, the graphical representation **5058** can "snap" to an appropriate position on the screen, and a user can utilize the touch screen **5004** to move and/or resize the graphical representation **5058** as desired. In certain embodiments, a numerical representation of the firing speed can be depicted in the second layer of information **5012** along with the graphical representation **5058**.

[0411] Referring now to FIG. **83**, in various embodiments, a user may desire to observe the clamping force exerted on the tissue T along the length and/or width of the end effector jaws **5024**, and thus, may select the clamping force category **5050** (FIG. **78**) from the instrument feedback menu **5036** (FIG. **78**). In such embodiments, a graphical representation **5158** of the clamping force can be depicted in the second layer of information **5012**. In some embodiments, the graphical representation **5158** can be arranged in the second layer of information **5012** relative to the clamped tissue depicted in the first layer of information **5010**. For example, the graphical representation **5158** can begin at and/or near the proximal end of the jaws **5024** depicted in first layer of information **5010**, and can end at and/or near the distal end of the jaws **5024** depicted in the first layer of information **5010**, for example. Furthermore, as described herein, the graphical representation **5158** can "snap" to an appropriate position on the screen, and a user can utilize the touch screen **5004** to move and/or resize the graphical representation **5158**, for example. In certain embodiments, the graphical representation can change during use to reflect variations in clamping pressure during a firing stroke, for example.

[0412] Referring to FIGS. **86-88**, in various embodiments, a user can interface with the touch screen **5004** to input controls and/or directives to the surgical instrument **5020** via the instrument controller **5016** and/or microcontroller. For example, a user can input controls directed to articulating the DLU **5022**, clamping the end effector jaws **5024**, advancing and/or retracting the cutting element, and/or ejecting staples from the DLU **5022**. In various embodiments, a user can select the instrument controller category **5070** from the control panel **5030** via the touch screen **5004** to activate the instrument-control state, such that the user can control the surgical instrument **5020** via the touch screen **5004**. When the touch screen **5004** is activated for instrument control, a user can interface with the touch screen **5004** to control the surgical instrument **5020**. For example, a user can interface with control buttons and/or icons in the second layer of information **5012** and/or can interface with locations on the touch screen **5004** corresponding to the underlying surgical instrument **5020** to input directives to the surgical instrument **5020**, for example.

[0413] For example, referring to FIG. **86**, a user can interface with the touch screen **5004** to indicate the desired articulation direction and degree of the DLU **5022**, for example. In certain embodiments, a user can drag a contact point across the touch screen **5004** from at and/or near the DLU **5022** toward the desired articulated location of the end effector **5002**. Referring to FIG. **86**, a user can trace a line or arc **5352** from at and/or near the DLU **5022** depicted in the first layer of information **5010** toward the desired articulation location of the DLU **5022**. For example, the arc **5352** can extend from and/or approximately from the axis A defined by the DLU **5022**, and the arc **5352** can extend to the axis A' defined by the desired articulated position of the DLU **5022**. Furthermore, the arc **5352** can extend in the direction indicated by the arrow **5354**, for example. In certain embodiments, an arc **5352** may not appear in the second layer of information **5010** when the user inputs the desired articulation via the touch screen **5004**. In various embodiments, the touch screen **5004** can communicate the desired articulation angle to the instrument controller **5016** (FIG. **93**) and/or microcontroller, which can effect the articulation of the DLU **5022** to the desired articulation angle. Referring now to FIG. **88**, the instrument controller **5016** (FIG. **93**) and/or microcontroller can effect articulation of the DLU **5022** to the axis A' based on the input of the user via the touch screen **5004**, for example.

[0414] Referring primarily to FIG. **87**, in various embodiments, a user can interface with control buttons, schematics, and/or icons in the first layer of information **5012** to input directives to the surgical instrument **5020**. For example, the first layer of information **5012** can include a symbol or icon **5356**, and the user can move and/or manipulate the icon **5356** to effect articulation of the DLU **5022**. In various embodiments, the icon **5356** can include a schematic of the DLU **5022**, for example. Furthermore, the user can drag the icon **5356** to an articulated and/or rotated orientation to effect articulation of the DLU **5022**. In various embodiments, a line and/or arc **5358** can indicate the direction and/or degree of articulation desired by the user. For example, the arc **5358** can extend from the non-articulated orientation of the icon **5356** to the articulated orientation of the icon **5356'**. The articulated icon **5356'** can correspond to the desired articulation of the DLU **5022**, for example. Referring now to FIG. **88**, the instrument controller **5016** and/or microcontroller can effect articulation of the DLU **5022** to the axis A' based on the input of the user via the touch screen **5004**, for example. For example, the DLU **5022** can be articulated to the subtended angle defined by the arc **5358** between the non-articulated icon **5356** and the articulated icon **5356'** shown in FIG. **87**.

[0415] Referring primarily to FIGS. **89** and **90**, in various embodiments, a user can interface with the touch screen **5004** to input directives to the surgical instrument **5020** related to the closure of the jaws **5024**. In certain embodiments, a user can drag a contact point across the touch screen **5004** from at and/or near the moveable jaw **5024** toward the closed orientation of the moveable jaw **5024** to initiate closure of the jaw **5024**. For example, a user can trace a line

or arc **5362** (FIG. **89**) from at and/or near the moveable jaw **5024** depicted in the first layer of information **5010** toward the desired closed orientation of the moveable jaw **5024**. In various embodiments, the touch screen **5004** can communicate the closure motion to the instrument controller **5016** and/or microcontroller, which can affect the closure of the moveable jaw(s) **5024**. In certain embodiments, the arc **5362** traced by the user on the touch screen **5004** can extend from and/or approximately from the axis A defined by the moveable jaw **5024**, and the arc **5362** can extend to the axis A' (FIG. **90**) defined by the desired clamped orientation of the moveable jaw **5024**. Furthermore, the arc **5362** can extend in the direction indicated by the arrow **5364**, for example. Referring now to FIG. **90**, the instrument controller **5016** and/or microcontroller can affect closure of the moveable jaw **5024** to the axis A' based on the input of the user via the touch screen **5004**, for example.

[0416] Referring now to FIGS. **91** and **92**, in various embodiments, a user can interface with control buttons and/or icons in the first layer of information **5012** to input directives to the surgical instrument **5020**. For example, the first layer of information **5012** can include a control interface **5072**, which can include buttons **5074**, **5075**, **5076**, **5077**, **5078** for inputting directives to the instrument controller **5016** and/or microcontroller, for example. Buttons for inputting directives to the instrument controller **5016** (FIG. **93**) and/or microcontroller can relate to articulating the DLU **5022**, closing and/or clamping the jaws **5024**, firing and/or retracting the cutting element, and/or ejecting staples from the DLU **5022**, for example. The user can interface with the touch screen **5004** to select a button or buttons from the control interface **5072**. Referring primarily to FIG. **91**, the control interface **5072** can include a stop/retract button **5474**, a pause button **5475**, a start button **5476**, a speed-up button **5477**, and/or a speed-down button **5478**, for example. The user can contact the start button **5476** to initiate the firing stroke and/or advance the firing element, the pause button **5475** to pause the firing stroke, and/or the stop/retract button **5474** to stop the firing stroke and retract the firing element, for example. Furthermore, the user can interface with the control interface **5072** to adjust the speed of the firing element throughout the firing stroke. For example, the user can contact the speed-up button **5477** to increase the velocity of the firing element, and the user can contact the speed-down button **5478** to decrease the velocity of the firing element. A user may increase the velocity of the firing element after and/or during a "soft" start phase of the firing stroke, for example, and/or may decrease the velocity of the firing element for a "soft" stop phase of the firing stroke toward an end of the firing stroke, for example. In other embodiments, the control interface **5072** can include buttons and/or controls for modifying the closure of the jaws **5024**, and/or the articulation of the DLU **5022**, for example. In various embodiments, the control interface **5072** can "snap" to a position in the second layer of information **5012** when the instrument controller **5070** menu is selected from the control panel **5030** and/or when the instrument-control state is otherwise selected by the user. The user can move, adjust and/or manipulate the control interface **5072** relative to the first layer of information **5010** and/or the display **5002**, for example.

[0417] In various embodiments, referring to FIG. **92**, the secondary layer of information **5012** can include a progression bar **5480**, which can indicate the position of the firing element in the DLU **5022**, for example. The progression bar **5480** can extend between a proximal end **5482** and a distal end **5488**, and can define a proximal-most position and a distal-most position of the firing element during a firing stroke. In various embodiments, the position of the firing element can be indicated along the progression bar **5480**, for example. In certain embodiments, the user can use the controls in the control interface **5072** to adjust the firing stroke. For example, the user can interface with the control interface **5072** to initiate and/or terminate the "soft" start and/or "soft" stop phases of the firing stroke based on the indicated position of the firing element along the progression bar **5480**. Furthermore, the progression bar **5480** can include measurement indicia and/or guides **5484**, **5486**, which can be set to positions along the progression bar **5480** where "soft" start and/or "soft" stop phases may begin and/or end, for example. The guides **5484**, **5486** can provide a visual suggestion to the user to initiate and/or terminate the "soft" start period with the speed-up button **5077** and/or the "soft" stop phase with the speed-down button **5078** during the firing stroke, for example. In various embodiments, the position of the guides **5484**, **5486** can be preset by the user.

[0418] Referring still to FIG. **92**, in various embodiments, the instrument controller **5016** and/or microcontroller can automatically affect variations in the speed of the firing element based on the position of the guides **5484**, **5486** along the progression bar **5480**. Furthermore, the user can interface with the touch screen **5004** to move and/or manipulate the progression bar **5480**, and thus, to modify the "soft" start and "soft" stop phases of the firing stroke. For example, the "soft" start and/or "soft" stop phases can be set at predetermined positions along the progression bar **5480** between the proximal end **5482** and the distal end **5488**. In certain embodiments, the user can interface with the touch screen **5004** to move and/or adjust the position of the guides **5484**, **5486** along the length of the progression bar **5480**. For example, the user can toggle the guides **5484**, **5486** between a plurality of positions on the progression bar **5480** by dragging and releasing the guides **5484**, **5486** to lengthen and/or shorten the "soft" start and/or "soft" stop phases of the firing stroke. In certain embodiments, the user can interface with the touch screen **5004** to move and/or adjust the position of the distal end **5488** of the progression bar **5480** to lengthen and/or shorten a firing stroke. For example, the user can drag the distal end **5488** proximally to shorten the firing stroke. and/or can drag the distal end **5488** distally to lengthen the firing stroke, for example. In various embodiments, the instrument controller **5016** and/or microcontroller can adjust the speed of the firing element and/or firing stroke length based on the modified positions of the guides **5484**, **5486** and/or the distal end **5488** along the progression bar **5480**, for example.

[0419] In various embodiments, the surgical instrument **10** can include at least one deactivation mechanism. As described in greater detail herein, such a deactivation mechanism can discourage an end user from tampering with the surgical instrument. For example, referring now to FIG. **134**, a power source **2500** is illustrated. The power source **2500** can be used to supply power to a surgical instrument such as, for example, the surgical instrument **10** (See FIG. **1**) and is similar in many respects to other power sources described elsewhere in this document such as, for example, the power source **200** (See FIG. **1**), and other power sources of the type described in further detail Zemlok '763, which

has been herein incorporated by reference in its entirety. To protect the power source **2500** from tampering, the power source **2500** can be configured to become inoperable or inactive in the event it is tampered with. For example, the power source **2500** can become inactive by ceasing to receive, store, and/or transmit energy, for example. Protection from tampering may ensure proper operation of the power source **2500** during use with the surgical instrument **10**.

[0420] Referring to FIGS. **134** and **135**, the power source **2500** may include an outer casing **2502** which may enclose various components of the power source **2500** such as, for example, a battery pack **2510**. The casing **2502** may include a first shell **2504** and a second shell **2506** which can be separably coupled to the first shell **2504**, as illustrated in FIG. **135**. In certain examples, the shells **2504** and **2506** can be formed from a thermoplastic material such as, for example, polycarbonate. Alternately, other materials having appropriate characteristics may be used. Furthermore, the shells **2504** and **2506** can be coupled to each other by one or more fastening techniques such as, for example, adhesives, welding, interlocking structures, and/or screws. In one example, the shells **2504** and **2506** can be secured together via a snap fit type engagement. In another example, the shells **2504** and **2506** can be secured together by fastening members **2508**, as illustrated in FIG. **135**.

[0421] Referring to FIGS. **135-137**, the power source **2500** may include a deactivation mechanism **2512** which may render the power source **2500** inoperable if the power source **2500** is compromised. For example, the deactivation mechanism **2512** may render the power source **2500** inoperable if the casing **2502** is tampered with. As illustrated in FIGS. **135-137**, the deactivation mechanism **2512** may comprise a circuit **2514** which may include a breakable portion **2516** (See FIG. **136**). In certain examples, the breakable portion **2516** may be comprised of a conductive material that can be easily ruptured. As illustrated in FIG. **136**, the circuit **2514** may be coupled to the battery pack **2510** and may allow current to flow for as long as the breakable portion **2516** remains intact. Breaking the breakable portion **2516**, as illustrated in FIG. **137**, may interrupt the circuit **2514** thereby terminating the flow of current through it. Further to the above, as illustrated in FIG. **135**, the circuit **2514** can be positioned such that the breakable portion **2516** may be ruptured when the first shell **2504** and the second shell **2506** are separated from each other which may render the power source **2500** unable to receive, store, and/or supply power to the surgical instrument **10** without a significant effort to repair the ruptured circuit **2514**.

[0422] Referring to FIG. **135**, the power source **2500** may comprise one or more battery cells depending on the current load needs of the instrument **10**. In various aspects, the power source **2500** may include a battery pack such as, for example, the battery pack **2510** which may include a plurality of battery cells which may be connected in series with each other. The power source **2500** can be replaceable. In certain aspects, the power source **2500** may comprise a rechargeable battery (e.g., lead-based, nickel-based, lithium-ion based, etc.). The battery cells may be, for example, 3-volt lithium battery cells, such as CR 123A battery cells, although in other embodiments, different types of battery cells could be used (including battery cells with different voltage levels and/or different chemistries). A user may disconnect and remove a depleted power source **2500** from the surgical instrument **10** and connect a charged power source **2500** in its place. The depleted power source **2500** can then be charged and reused. It is also envisioned that the power source **2500** may include at least one disposable battery. In various aspects, the disposable battery may be between about 9 volts and about 30 volts. A user may disconnect and remove a depleted disposable power source **2500** and connect a new disposable power source **2500** to power the surgical instrument **10**.

[0423] As described above, the power source **2500** may include rechargeable battery cells and can be removably placed within the handle portion **14** of the housing **12**, for example (see FIG. **1**). In such circumstances, the power source **2500** can be charged using a charger base which may comprise a power source for charging the power source **2500**. A deactivation mechanism such as, for example, the deactivation mechanism **2512** can be utilized to prevent the power source **2500** from being recharged by the charger base if the power source **2500** is tampered with as described above. For example, the circuit **2514** may be coupled to the battery pack **2510** and may be couplable to the charger base to permit the charger base to recharge the battery pack **2510**. As described above, the breakable portion **2516** (See FIG. **135**) may be broken when the first shell **2504** is separated from the second shell **2506** thereby interrupting current flow through the circuit **2514** which may prevent the charger base from recharging the battery pack **2510**. This may be advantageous in discouraging an end user from tampering with the power source **2500** because tampering with the power source **2500** may render it incapable of being recharged for subsequent use with the surgical instrument **10**.

[0424] Referring now to FIGS. **138-141**, the power source **2500** may include a data storage unit such as, for example, memory **2552** which may store data including information about the power source **2500** such as, for example, total charge available, number of uses, and/or performance. Additionally, the memory **2552** may store data about the surgical instrument **10** including a variety of information about the operation of the surgical instrument **10** during a surgical procedure such as, for example, various sensor readings, number of firings, number of cartridges utilized, and/or information about treated patients. The memory **2552** may include any means for storing software, including but not limited to ROM (read only memory), RAM (random access memory), PROM (programmable ROM), EEPROM (electrically erasable PROM), and/or other computer-readable media.

[0425] Further to the above, referring again to FIGS. **138-141**, the power source **2500** may include a data access portal such as, for example, I/O interface **2550** to provide access to data stored in the memory **2552**. For example, the I/O interface **2550** may allow data stored in the memory **2552** of the power source **2500** to be downloaded to an external computer device for evaluation and analysis. In certain circumstances, the I/O interface **2550** may be a wired interface and may be operably coupled to a deactivation mechanism **2512** which may include a rupturable connection that can be severed to prevent data transmission through the I/O interface **2550**. Similar to the breakable portion **2516** of the deactivation mechanism **2512**, the rupturable connection of the deactivation mechanism **2554** can be positioned such that it may be severed when the casing **2502** is breached such as, for example, when the first shell **2504** and the second shell **2506** are separated from each other.

[0426] Further to the above, as illustrated in FIGS. **139-141**, the I/O interface **2550** may include a connector **2555** which may be configured to receive a corresponding connector **2556** from the external computer device, for example, to permit data transfer between the memory **2552** and the computer device. In addition, the connector **2554** can be protected by a cover such as, for example, pivoting cover **2559** which may be configured to move between a locked position (See FIG. **139**), wherein the connector **2554** is unexposed and an unlocked position (See FIG. **140**), wherein the connector **2554** is exposed to receive the corresponding connector **2556**. In one example, a helical screw **2558** may be used to secure the pivoting cover **2559** to the casing **2502**. Other means for reversibly covering the connector **2556** is contemplated by the present disclosure. Further to the above, in certain examples, the connectors **2554** and **2556** may include a key and lock type engagement wherein the connectors **2554** and **2556** may comprise, for example, unique complimenting geometries that prevent the connector **2554** from receiving other connectors in order to prevent or at least limit unauthorized access to data stored within the memory **2552**. In certain examples, the connector **2554** can be positioned within the casing **2502**, as illustrated in FIG. **141**, to further limit unauthorized access to the data stored in the memory **2552**. In such circumstances, the connector **2554** can be accessed by separating the first shell **2504** from the second shell **2506** of the casing **2502**. However, as described above in greater detail, the deactivation mechanism **2512** may render the power source **2500** inoperable upon breach of the casing **2502** which may further discourage from attempting to expose the connector **2554** to gain access to the data stored in the memory **2552**.

[0427] Referring to FIG. **142**, the power source **2500** may include a processor **2560** which may manage the data stored in the memory **2552**. To protect such data from unauthorized access, the processor **2560** may be coupled to a breach sensing mechanism **2562**. For example, the processor **2560** may coupled to the circuit **2514** and may be configured to detect rupture of the breakable portion **2516**. In one example, the breach sensing mechanism **2562** may include one or more sensors configured to detect a breach in the casing **2502**. In any event, upon detecting a breach, the processor **2560** can be programmed to prevent unauthorized access to the data stored in the memory **2552**, for example, by deleting or encrypting the data.

[0428] Referring to FIGS. **143-145**, a surgical instrument **2600** is depicted. The surgical instrument **2600** is similar to the surgical instrument **10** (See FIG. **1**) and/or the surgical instrument **2100** (See FIG. **146**) in many respects. For example, the surgical instrument **2600** may include a housing assembly **2602** which is similar to the housing assembly **2102** of the surgical instrument **2100** and/or the housing **12** of the surgical instrument **10**. Furthermore, the surgical instrument **2600** may include a power source **2500'** which can be used to supply power to the surgical instrument **2600** and is similar in many respects to other power sources described elsewhere in this document such as, for example, the power source **2500** (See FIG. **134**), and other power sources of the type described in further detail in Zemlok '763, which has been herein incorporated by reference in its entirety. In addition, as illustrated in FIG. **143**, the power source **2500'** may include a charge level indicator **2660** which can be configured to provide feedback to a user about the charge level of the power source **2500'**. The feedback can be in the form of sound and/or light, for example. The power source **2500'** may include one or more light emitting diodes (LED). The processor **2560**, for example, can be programmed to control the LEDs to provide feedback to a user about the charge level of the power source **2500'** as can be measured by a charge meter, for example.

[0429] As illustrated in FIGS. **143-145**, the power source **2500'** may include a first LED **2662** and a second LED **2664**. The processor **2560** can be coupled to the LEDs **2662** and **2664** and may be programmed to illuminate both of the LEDs **2662** and **2664** upon receiving a signal from the charge meter that the power source is fully charged. In addition, the processor **2560** may be programmed turn off both of the LEDS **2662** and **2664** upon receiving a signal from the charge meter that the power source is empty. Furthermore, the processor **2560** may be programmed to illuminate only the first LED **2662** but not the second LED **2664** upon receiving a signal from the charge meter that the power source includes sufficient charge for only one complete operation of the surgical instrument **2600**. Other means for alerting a user as to the charge level of the power source **2500'** are contemplated by the present disclosure.

[0430] In certain embodiments, various components of the surgical instrument **10** can be reusable and various components can be replaceable, for example. Furthermore, the surgical instrument **10** can be at least partially assembled, disassembled, and/or reassembled. For example, the surgical instrument **10** can be at least partially disassembled and reassembled with reusable components and replacement components, for example. Additionally, the surgical instrument **10** can be at least partially disassembled for cleaning, disinfecting, and/or reprocessing between surgical procedures. Subsequently, the surgical instrument **10** can be reassembled, for example. As described in greater detail herein, various features, assemblies and/or systems of the surgical instrument **10** can facilitate disassembly and assembly thereof. For example, referring now to FIGS. **146-148**, a surgical instrument **2100** is depicted. The surgical instrument **2100** is similar to the surgical instrument **10** (See FIG. **1**) in many respects. For example, the surgical instrument **2100** may include a housing assembly **2102** which is similar to the housing **12** of the surgical instrument **10**. In addition, the housing assembly **2102** may include several detachable components **2103** which can be detachably secured to a housing body **2104** such as, for example, a working assembly **2106**. Other components of the housing assembly **2102** can be detachably secured to the housing body **2104**. For example, the housing assembly **2102** may include a replaceable power source **2108** which can be detachably secured to a handle portion **2110** of the housing body **2104**. The power source **2108** is similar in many respects to other power sources described elsewhere in this document such as, for example, the power source **200** (See FIG. **1**).

[0431] Referring again to FIG. **147**, the housing assembly **2102**, or some or all of its components can be reusable. In other words, the housing assembly **2102**, or some or all of its components can be utilized in multiple surgical procedures which may require for the housing assembly **2102** to be cleaned, disinfected, and/or reprocessed between surgical procedures. The ability to reversibly disassemble the housing assembly **2102**, or remove some or all of its components such as, for example, the working assembly **2106** in a simple and reproducible manner may simplify the steps of cleaning,

disinfecting, and/or reprocessing of the housing assembly **2012** and/or may reduce cost.

[0432] Referring to FIG. **147**, the housing assembly **2102** may be disassembled following a surgical procedure and the components of the disassembled housing assembly **2102** such as, for example, the housing body **2104**, the working assembly **2106** and/or the power source **2110** can be cleaned, disinfected, and/or reprocessed each separately or in combination with other components depending on the characteristics and internal parts of each component. In certain examples, the housing body **2104** can be disposable. Said another way, the housing assembly **2102** may be disassembled following a surgical procedure and the housing body **2104** can be replaced with a new housing body **2104**. The remaining components, however, can be cleaned, disinfected, and/or reprocessed then attached to the new housing body **2104**. The reader will appreciate that other components of the housing assembly **2102** can also be disposable and can be replaced with new like components.

[0433] Referring again to FIGS. **146-148**, the housing body **2104** can be configured to permit assembly and disassembly of the housing assembly **2102** in a simple, predictable, and reproducible manner. For example, the housing body **2104** can include a first shroud portion **2112** (See FIG. **147**) and a second shroud portion **2114** (See FIG. **146**) which can be releasably attached to the first shroud portion **2112**. In one example, the shroud portions **2112** and **2114** can include a snap fit type engagement. The shroud portions **2112** and **2114** can be adapted for matting engagement with each other. In one example, the shroud portion **2112** can include a plurality of female members **2116** (See FIG. **147**) which may be cylindrical in shape and configured to receive corresponding male members (not shown) disposed on the shroud portion **2114** in a snap fit engagement when the shroud portions **2112** and **2114** are assembled together.

[0434] Further to the above, the working assembly **2106** can be nested in the first shroud portion **2112**. As illustrated in FIG. **147**, the second shroud portion **2114** can be removed to expose the working assembly **2106** nested in the first shroud portion **2112** in order to permit a user to remove the working assembly **2106** from the housing body **2104**. The working assembly **2106**, as illustrated in FIG. **147**, may include a motor **2118** which may generate rotational motions to effectuate an end effector (e.g., the cartridge/anvil portion of the loading unit **20** illustrated in FIG. **2**). The motor **2118** is similar in many respects to other motors described elsewhere in this document such as, for example, the motor **100** (See FIG. **1**). In addition, the working assembly **2106** may also include a transmission assembly **2120** which can be operably coupled to the motor **2118** and is similar in many respects to other transmission assemblies described elsewhere in this document such as, for example, the gear assembly **170** (See FIG. **5**). Furthermore, the working assembly **2106** may also include a firing member assembly **2122** which may transform the rotational motions generated by the motor **2118** into axial motions which can be transmitted to the end effector through a firing rod **2124**. The firing member assembly **2122** is similar in many respects to other drive assemblies described elsewhere in this document such as, for example, the firing member assembly **82**.

[0435] Referring to FIGS. **147** and **148**, the first shroud portion **2112** may include a plurality of compartments designed and spaced to receive the working assembly **2106**. For example, the shroud portion **2112**, as illustrated in FIG. **147**, may include a motor nesting compartment **2126** which can be spaced to accommodate the motor **2118**. In certain examples, the motor nesting compartment **2126** can be designed to fit the motor **2118** in a specific arrangement to ensure accurate assembly. In addition, the motor nesting compartment **2126** may include assembly instructions which can be, for example, molded onto a wall of the motor nesting compartment **2126** to ensure correct assembly. For instance, the side walls of the motor nesting compartment **2126** can be configured to closely receive the motor **2118**. Moreover, the sideways can be asymmetrically configured, at least in some respects, to receive the motor **2118** in only one orientation, i.e. the correct orientation.

[0436] Similarly, the shroud portion **2112**, as illustrated in FIG. **147**, may include a transmission assembly nesting compartment **2128** which can be spaced to accommodate the transmission assembly **2120**. Furthermore, in certain examples, the transmission assembly nesting compartment **2128** can be designed to fit the transmission assembly **2120** in a specific arrangement to ensure accurate assembly. For instance, the side walls of the transmission assembly nesting compartment **2128** can be configured to closely receive the transmission assembly **2120**. Moreover, the sideways can be asymmetrically configured, at least in some respects, to receive the transmission assembly **2120** in only one orientation, i.e. the correct orientation. In addition, the transmission assembly nesting compartment **2128** may include assembly instructions which can be, for example, molded onto a wall of the transmission assembly nesting compartment **2128** to ensure correct assembly. Similarly, the shroud portion **2112**, as illustrated in FIG. **147**, may include a firing member assembly nesting compartment **2130** which can be spaced to accommodate the firing member assembly **2122**. Furthermore, in certain examples, the firing member assembly nesting compartment **2130** can be designed to fit the firing member assembly **2122** in a specific arrangement to ensure accurate assembly. For instance, the side walls of the firing member assembly nesting compartment **2130** can be configured to closely receive the firing member assembly **2122**. Moreover, the sideways can be asymmetrically configured, at least in some respects, to receive the firing member assembly **2122** in only one orientation, i.e. the correct orientation. In addition, the firing member assembly nesting compartment **2130** may include assembly instructions which can be, for example, molded onto a wall of the firing member assembly nesting compartment **2130** to ensure correct assembly. The reader will appreciate that other components of the working assembly **2106** may also be provided with unique designated accommodating compartments within the shroud portion **2112**. The reader will also appreciate that electrical contacts for the components of the working assembly **2106** can also be embedded with the compartments of the shroud portion **2112** such that upon correct assembly, electrical connections can be established between the working assembly **2106**, other components of the housing assembly **2102** such as, for example, the power source **2108**, and/or other components of the surgical instrument **2100**.

[0437] Further to the above, the working assembly **2106** can be separably coupled to the firing rod **2124**, as illustrated in FIG. **147**, which may permit a user to remove and reconnect the working assembly **2106** as a single unit to the surgical instrument **2100** to simplify disassembly and reassembly of the working assembly **2106**. In one example, as

illustrated in FIG. **147**, the firing member assembly **2122** may include a hollow tubular distal portion **2132** which may include a distal opening configured to receive and releasably lock onto a proximal portion **2134** of the firing rod **2124** in a snap fit type engagement, for example.

[0438] Referring again to FIGS. **147** and **148**, other components of the housing assembly **2102** can be nested in dedicated compartments in the shroud portion **2112** in a similar manner to the working assembly **2106**. For example, the shroud portion **2112** may include a power source nesting compartment **2136** which can be spaced to accommodate the power source **2108**. Furthermore, in certain examples, the power source nesting compartment **2136** can be designed to fit the power source **2108** in a specific arrangement to ensure accurate assembly. For instance, the side walls of power source nesting compartment **2136** can be configured to closely receive the power source **2108**. Moreover, the sideways can be asymmetrically configured, at least in some respects, to receive power source **2108** in only one orientation, i.e. the correct orientation. In addition, the power source nesting compartment **2136** may include assembly instructions which can be, for example, molded onto a wall of the power source nesting compartment **2136** to ensure correct assembly.

[0439] Further to the above, as illustrated in FIGS. **147** and **148**, certain user input mechanisms such as, for example, firing button **2138** and/or closure switch **2140** can also be detachable from the housing body **2104** which may include a firing button nesting compartment **2142** spaced to accommodate the firing button **2138** and/or a closure switch nesting compartment **2144** spaced to accommodate the closure switch **2140**. Furthermore, in certain examples, the firing button nesting compartment **2142** can be designed to fit the firing button **2138** in a specific arrangement to ensure accurate assembly. For instance, the side walls of firing button nesting compartment **2142** can be configured to closely receive the firing button **2138**. Moreover, the sideways can be asymmetrically configured, at least in some respects, to receive the firing button **2138** in only one orientation, i.e. the correct orientation. Similarly, the closure switch nesting compartment **2144** can be designed to fit the closure switch **2140** in a specific arrangement to ensure accurate assembly. For instance, the side walls of closure switch nesting compartment **2144** can be configured to closely receive the closure switch **2140**. Moreover, the sideways can be asymmetrically configured, at least in some respects, to receive the closure switch **2140**in only one orientation, i.e. the correct orientation. In addition, the firing button nesting compartment **2142** and/or the closure switch nesting compartment **2144** may include assembly instructions which can be, for example, molded onto a wall of the firing button nesting compartment **2142** and/or the closure switch nesting compartment **2144** to ensure correct assembly.

[0440] Referring again to FIGS. **147** and **148**, in addition to the nesting compartments, the shroud portion **2112** can include securing mechanism(s) to secure some or all of the detachable components **2103** of the housing assembly **2102** in their respective compartments to ensure that the detachable components **2103** remain nested in their respective compartments. Such securing mechanisms may include securing members which can be movable between an unlocked configuration (See FIG. **148**) and a locked configuration (See FIG. **147**) to lock the detachable components **2103** of the housing assembly **2102** to their respective compartments in the shroud portion **2112**. The reader will appreciate that a single or multiple securing members can be utilized to secure one or more of the detachable components **2103** to the shroud portion **2112**. In addition, the securing mechanisms may also include safety features that may prevent the securing members from moving to the locked configuration in event of incorrect assembly to ensure correct assembly of the detachable components **2103** of the housing assembly **2102**. As illustrated in the exemplary embodiment in FIG. **147**, the working assembly **2106** can be secured to the shroud portion **2112** by several of the securing members such as, for example, a motor securing member **2148**, a transmission assembly securing member **2150**, and/or a firing member assembly securing member **2152**. In certain examples, as illustrated in FIG. **147**, a power source securing member **2154**, a firing button securing member **2156**, and a closure switch securing member **2158** can be utilized to secure the power source **2108**, the firing button **2138**, and the closure switch **2140**, respectively.

[0441] The securing members may clamp onto the detachable components **2103** by moving from the unlocked configuration (See FIG. **148**) to the locked configuration (See FIG. **147**). For example, the motor securing member **2148** may clamp onto the motor **2118** by moving from the unlocked configuration (See FIG. **148**) to the locked configuration (See FIG. **147**). In certain examples, some or all of the detachable components **2103** may comprise tracks configured to receive the securing members as they move from the unlocked configuration to the locked configuration. The tracks can be positioned such that they may be aligned to receive the moving securing members only when the detachable components **2103** are correctly nested within their respective compartments in the shroud portion **2112**. For example, if the motor **2118** is not correctly nested in the motor nesting compartment **2126**, the motor securing member **2148** may not be correctly aligned with its track and as such upon moving the motor securing member **2148** from the unlocked configuration to the locked configuration, the motor securing member **2148** may not enter the track and, for example, may abut against an outer wall of the motor **2118**. In certain examples, the motor securing member **2148** can be positioned such that it may prevent the first shroud portion **2112** from mating engagement with the second shroud portion **2114** if a user attempts to assemble the shroud portions **2112** and **2114** while the motor securing member **2148** is not in the locked configuration. This arrangement may alert a user to recheck the assembled components of the housing assembly **2102** for correct assembly.

[0442] Similar to the motor securing member **2148**, the transmission assembly securing member **2150** may be received in a dedicated track on the transmission assembly **2120** and the transmission assembly securing member **2150** can be positioned such that it aligns with its respective track only if the transmission assembly **2120** is correctly nested in the transmission assembly nesting compartment **2128**. In addition, the firing member assembly securing member **2152** may be received in a dedicated track on the firing member assembly **2122**, for example, and the firing member assembly securing member **2152** can be positioned such that it aligns with its track only if the firing member assembly **2122** is correctly nested in the firing member assembly nesting compartment **2130**. Also similar to the motor securing

member **2148**, the transmission assembly securing member **2150** and/or the firing member assembly securing member **2152** can be positioned such that either may prevent the first shroud portion **2112** from mating engagement with the second shroud portion **2114** if a user attempts to assemble the shroud portions **2112** and **2114** while the transmission assembly securing member **2150** and/or the firing member assembly securing member **2152** are not in the locked configuration. As described above, some of the detachable components **2103** can be detached and reattached to the shroud member **2112** together as an assembly and can be secured by a plurality of the securing members. For example, the working assembly **2106** can be secured to the shroud portion **2112** by the motor securing member **2148**, the transmission assembly securing member **2150** and/or the firing member assembly securing member **2152**, as illustrated in FIG. **147**. Such arrangement may provide an additional level of insurance of correct assembly as failure to correctly assemble any one of the components of the working assembly **2106** may prevent its corresponding securing member from reaching the locked configuration which may prevent the first shroud portion **2112** from mating engagement with the second shroud portion **2114** if a user attempts to assemble the shroud portions **2112** and **2114** while at least one of the securing members remains short of the locked configuration.

[0443] Referring again to FIGS. **147** and **148**, some or all of the securing members can be pivotally attached to the first shroud portion **2112** and can be movable relative to the first shroud portion **2112** from the unlocked configuration (See FIG. **148**) to the locked configuration (See FIG. **147**), and vice versa. In certain examples, the second shroud portion **2114** can include protruding securing members (not shown) configured to be received within corresponding receiving member (not shown) in the detachable components **2103** nested in the first shroud portion **2112** when the shroud portions **2112** and **2114** are aligned for mating engagement during assembly of the housing assembly **2102**. The protruding securing members may ensure that the detachable components **2103** remain secured in the first shroud portion **2112**. In addition, the protruding securing members may prevent the first shroud portion **2112** from mating engagement with the second shroud portion **2114** if a user attempts to assemble the shroud portions **2112** and **2114** while the protruding securing members are not be properly aligned with their corresponding receiving members, for example due to incorrect assembly of the detachable components **2103**, which may alert the user to recheck the assembly of the detachable components **2103** of the housing assembly **2102** for correct assembly. The reader will appreciate that the positions of the protruding securing members and their respective receiving members can be reversed such that the protruding securing members can be configured to protrude from the detachable components **2103** and be received in corresponding receiving member on the second shroud portion **2114**. In any event, the protruding securing members and their corresponding receiving members can be releasably attachable to one another in a snap fit type engagement, for example. Other engagement mechanisms are contemplated by the present disclosure.

[0444] Further to the above, some or all of the detachable components **2103** may include camming surfaces configured to receive the securing members of the first shroud portion **2112** as they are moved from the unlocked configuration (See FIG. **148**) to the locked configuration (See FIG. **147**). The camming surfaces can be disposed on an outer surface of some or all of the detachable components **2103** and may allow corresponding securing members to apply pressure onto the detachable components **2103** in the locked configuration. For example, the motor **2118** may include a camming surface along its track. As the motor securing member **2148** is moved from the unlocked configuration (See FIG. **148**) to the locked configuration (See FIG. **147**), the motor securing member **2148** may travel along the camming surface on the motor **2118** which may allow the motor securing member **2148** to apply an increasing pressure onto the motor **2118** with a maximum pressure, for example, at the locked configuration. The pressure applied onto the motor **2118** may assist in securing the motor in the motor nesting compartment **2126**.

[0445] As discussed above, an end effector can include a firing member which can be advanced distally to staple and/or incise tissue. Referring now to FIG. **155**, an end effector **11260** can comprise a first jaw including an anvil **11262** and a second jaw including a staple cartridge **11264**. The end effector **11260** can further comprise, one, a housing and/or frame **11261** extending proximally from the anvil **11262** and the staple cartridge **11264** and, two, a firing member **11266** which can be moved relative to the housing **11261**, the anvil **11262**, and the cartridge **11264**. The end effector **11260** can further comprise an articulation joint **11230** configured to permit the anvil **11262** and the cartridge **11264** to be articulated by an articulation driver **11268**. In use, the end effector **11260** can be assembled to a shaft **11240** of a surgical instrument, for example, such that, one, the end effector housing **11261** is coupled to a shaft housing **11241** configured to support the end effector housing **11261**, two, the end effector firing member **11266** is coupled to a shaft firing actuator **11246** configured to advance and retract the end effector firing member **11266** and/or, three, the end effector articulation driver **11268** is coupled to a shaft articulation actuator **11248** configured to advance and retract the end effector articulation driver **11268**. In use, the firing member **11266** can be advanced distally to move the anvil **11262** from an open position in which tissue can be positioned intermediate the anvil **11262** and the cartridge **11264** to a closed position in which the anvil **11262** compresses the tissue against the cartridge **11264**. In various circumstances, the firing member **11266** can include a first engagement member configured to engage the first jaw and a second engagement member configured to engage the second jaw when the firing member **11266** is advanced distally such that the anvil **11262** can be pivoted toward the staple cartridge **11264** by the engagement members. In order to re-open the end effector and allow the anvil **11262** to be returned to its open position, the firing member **11266** must be sufficiently retracted. In various circumstances, the firing member **11266** may become stuck in an at least partially fired position and, as a result, the anvil **11262** may not be reopened thereby making the removal of the surgical instrument from the surgical site difficult.

[0446] Turning now to FIGS. **156-161**, an end effector, such as end effector **11360**, for example, can include a firing member which can permit the anvil **11262** of the end effector **11360** to be re-opened eventhough the firing member of the end effector **11360** is stuck in an at least partially fired position. More particularly, the end effector **11360** can include a firing member **11366** comprising separable por-

tions **11366***a* and **11366***b* which can be configured to permit relative movement between the anvil **11262** and the cartridge **11264** in various instances. Referring primarily to FIGS. **157** and **158**, the separable portions **11366***a* and **11366***b* can be held together by a lock **11390** when the lock **11390** is in a locked condition, as illustrated in FIG. **158**. Correspondingly, when the lock **11390** is in an unlocked condition, the separable portions **11366***a* and **11366***b* can move relative to one another. The separable portion **11366***a* of the firing member **11366** can comprise a first lateral portion **11363***a*, a second lateral portion **11367***a*, and a cutting member portion **11365***a* positioned intermediate the lateral portions **11363***a* and **11367***a*. In various circumstances, the lateral portions **11363***a* and **11367***a* can be retained to the cutting member portion **11365***a* via one or more pins, not illustrated in FIGS. **157** and **158**, extending through apertures **11396***a* defined therein. The separable portion **11366***b* of the firing member **11366** can comprise a first lateral portion **11363***b*, a second lateral portion **11367***b*, and a cutting member portion **11365***b* positioned intermediate the lateral portions **11363***b* and **11367***b*. In various circumstances, the lateral portions **11363***b* and **11367***b* can be retained to the cutting member portion **11365***b* via at least one retention member, not illustrated in FIGS. **157** and **158**, engaged with a foot **11396***b* extending therefrom. As the reader will appreciate, the aforementioned retention pins hold the various components of the separable portion **11363***a* together while the aforementioned retention member holds the various components of the separable portion **11363***b* together. As the reader will also appreciate, the lock **11390**, when in its locked position, holds the separable portions **11363***a* and **11363***b* together. In various instances, referring primarily to FIG. **158**, the lock **11390** can include a first lock member **11397***a* configured to engage a first lock portion **11361***a* of the first cutting member portion **11365***a* and, in addition, a second lock member **11397***b* configured to engage a second lock portion **11361***b* of the second cutting member portion **11365***b*. The first lock portion **11361***a* and the second lock portion **11361***b* can be configured to co-operatively and releasably hold the cutting member portions **11365***a* and **11365***b* together. In various instances, the lock portions **11397***a*, **11397***b* can hold the cutting member portions **11365***a* and **11365***b* together such that cutting surfaces **11395***a* and **11395***b* of the cutting member portions **11365***a* and **11365***b*, respectively, form a continuous, or at least substantially continuous, cutting surface. Referring once again to FIG. **158**, the lock portions **11397***a*, **11397***b* of the lock **11390** can be configured to co-operatively engage and hold keys **11361***a* and **11361***b* of cutting member portions **11365***a* and **11365***b*, respectively. In various instances, the lock portions **11397***a*, **11397***b* can define a recess **11398** therebetween which is configured to receive keys **11361***a* and **11361***b* when the lock **11390** is in its locked position. When the lock **11390** is pulled proximally, the lock portions **11397***a* and **11397***b* can disengage the keys **11361***a* and **11361***b*. At such point, the lock **11390** may no longer hold the cutting member portions **11365***a* and **11365***b* together. In such circumstances, as a result, the separable portions **11366***a* and **11366***b* can move relative to each other. For instance, the separable portion **11366***a* can move with the jaw **11262** when the jaw **11262** is re-opened and, correspondingly, the separable portion **11366***b* can remain with the cartridge **11264**. In view of the above, the lock **11390** can be pulled proximally to unlock the separable portions **11366***a* and **11366***b* when the firing member **11366** becomes stuck in an at least partially fired position, for example.

[0447] As discussed above, the lock **11390** can be pulled proximally to unlock the separable portions **11366***a* and **11366***b* of the firing member **11366**. Turning now to FIG. **159**, the lock **11390** can be pulled proximally and/or pushed distally by lock bar **11391**. The lock bar **11391** can be positioned within the end effector **11360** and can include a proximal end **11392** and a distal end **11393**. The distal end **11393** of the lock bar **11391** can be engaged with the lock **11390**. More specifically, in at least one embodiment, the distal end **11393** can include a projection extending therefrom which can be slidably positioned within an elongate slot **11399** defined in the lock **11390**. In order to pull the lock **11390** proximally, the lock bar **11391** can be pulled proximally until the projection contacts the proximal end **11394** of the elongate slot **11399** wherein the motion of the lock bar **11391** can be transferred to the lock **11390**. Correspondingly, the projection can be configured to contact a distal end **11395** of the elongate slot **11399** in order to push the lock **11390** distally. As the reader will appreciate, referring again to FIG. **156**, the firing member **11366** can one or more include longitudinal slots **11369** defined therein which can be configured to permit the lock bar projection to extend therethrough and engage the lock **11390** as described above.

[0448] Further to the above, referring primarily to FIGS. **156** and **160**, the proximal end **11392** of the lock bar **11391** can comprise an attachment portion configured to be engaged by a lock actuator **11348** of a shaft **11340** of a surgical instrument. Referring primarily to FIG. **160**, the lock actuator **11348** can comprise a distal end **11349** including a notch, for example, which can be configured to receive the proximal end **11392** of the lock bar **11391**. The lock actuator **11348** can further comprise a proximal end **11347** which can be pulled proximally and/or pushed distally by a user of the surgical instrument in order to move the lock actuator **11348** and the lock bar **11391** proximally and/or distally, respectively. In use, the proximal end **11392** of the lock bar **11391** can be assembled to the distal end **11349** of the lock actuator **11348** when the end effector **11360** is assembled to the shaft **11340**.

[0449] As outlined above, a motor can be utilized to advance and/or retract a firing member to deploy fasteners from an end effector and/or incise tissue captured within the end effector. In various instances, the motor can include a rotatable drive shaft, the rotation of which can be converted to translational movement and transmitted to a firing member, such as a cutting member and/or staple driver, for example. In at least one such instance, the rotatable drive shaft can include a threaded portion which is threadably engaged with a collar including a threaded aperture defined therein wherein, in use, the collar can be constrained from rotating such that the rotation of the drive shaft advances the collar distally and/or retracts the collar proximally depending on the direction in which the drive shaft is rotated. In certain instances, the firing member may become stuck and/or otherwise experience a force, or torque, which exceeds a desired, or predetermined maximum, force, or torque. Turning now to FIGS. **162-167**, a motor assembly **12000** can include a motor **12010**, a shaft **12020**, and a slip clutch assembly **12030**, wherein the slip clutch assembly **12030** can limit the force, or torque, that the motor **12010** can transmit to the shaft **12020**. In various instances, refer-

ring primarily to FIGS. **162** and **163**, the slip clutch assembly **12030** can transmit torque between a rotatable drive output **12012** of the motor **12010** and the shaft **12020**. Referring now to FIGS. **165-167**, the drive output **12012** can include a substantially circular outer profile portion **12011** and a transition surface **12014**, which can be flat, or at least substantially flat, in various instances. The outer profile of the drive output **12012** can further include a first drive shoulder **12016** defined between the circular profile portion **12011** and the flat surface **12014** and, in addition, a second drive shoulder **12018** which is defined between the opposite end of the flat surface **12014** and the circular profile portion **12011**.

[0450] As also illustrated in FIGS. **165-167**, the slip clutch assembly **12030** can include a drive element **12034** which is biased into engagement with the drive output **12012** by a biasing element, or spring, **12036**. The drive element **12034** can be at least partially positioned within a retention slot defined in a housing **12037** of the slip clutch assembly **12030** such that the movement of the drive element **12034** relative to the housing **12037** can be defined along an axis. As the reader will appreciate, the housing **12037** of the slip clutch assembly can be mounted to the shaft **12020** such that the housing **12037** and the shaft **12020** rotate together synchronously. As the reader will also appreciate, the drive element **12034** can transmit the rotational motion of the drive output **12012** to the housing **12037**, at least in certain circumstances. More specifically, when the drive output **12012** is rotated in a first direction, as indicated by arrow **12017**, to advance the firing member distally, the drive output **12012** can rotate relative to the drive element **12034** until the first drive shoulder **12016** comes into contact with the drive element **12034**. As the reader will appreciate, the first drive shoulder **12016** can remain in contact with the drive element **12034** so long as the biasing member **12036** is able to resist, or at least sufficiently resist, the radially outward movement of the drive element **12034**. So long as the drive element **12034** is in contact with the first drive shoulder **12016**, the motor **12010** can rotate the shaft **12020** in a direction which advances the firing member distally. In various instances, the motor **12010** may apply a torque to the drive output **12012** which is large enough to displace the drive element **12034** radially outwardly such that the first drive shoulder **12016** of the drive output **12012** slips by the drive element **12034** and, as a result, the drive output **12012** rotates relative to the drive element **12034**, the slip clutch housing **12037**, and the shaft **12020**. Stated another way, the drive element **12034** can be defeated and operably disengaged from the motor **12010** when the torque applied to the drive output **12012** exceeds a predetermined, or maximum, torque. When the torque applied to the drive output **12012** falls below this predetermined, or maximum, torque, the drive element **12034** can re-engage the first drive shoulder **12016** and, as a result, the shaft **12020** can be operably re-engaged with the motor **12010** such that the shaft **12020** is rotated by the drive output **12012** of the motor **12010**.

[0451] Further to the above, when the drive output **12012** is rotated in a second direction, as indicated by arrow **12019**, to retract the firing member proximally, the drive output **12012** can rotate relative to the drive element **12034** until the second drive shoulder **12018** comes into contact with the drive element **12034**. As the reader will appreciate, the second drive shoulder **12018** can remain in contact with the drive element **12034** so long as the biasing member **12036** is able to resist, or at least sufficiently resist, the radially outward movement of the drive element **12034**. So long as the drive element **12034** is in contact with the second drive shoulder **12018**, the motor **12010** can rotate the shaft **12020** in a direction which retracts the firing member proximally. In various instances, the motor **12010** may apply a torque to the drive output **12012** which is large enough to displace the drive element **12034** radially outwardly such that the second drive shoulder **12018** of the drive output **12012** slips by the drive element **12034** and, as a result, the drive output **12012** rotates relative to the drive element **12034**, the slip clutch housing **12037**, and the shaft **12020**. Stated another way, the drive element **12034** can be defeated and operably disengaged from the motor **12010** when the torque applied to the drive output **12012** exceeds a predetermined, or maximum, torque. When the torque applied to the drive output **12012** falls below this predetermined, or maximum, torque, the drive element **12034** can re-engage the second drive shoulder **12018** and, as a result, the shaft **12020** can be operably re-engaged with the motor **12010** such that the shaft **12020** is rotated by the drive output **12012** of the motor **12010**.

[0452] In various instances, further to the above, the first drive shoulder **12016** and the second drive shoulder **12018** can comprise the same configuration. In certain instances, the first drive shoulder **12016** can be defined by a first radius of curvature and the second drive shoulder **12018** can be defined by a second radius of curvature. In some instances, the first radius of curvature can be the same as the second radius of curvature. In such instances, the maximum, or slip, torque that the motor **12010** can apply when rotating the drive output **12012** in the first direction **12017** can be the same, or substantially the same, as the maximum, or slip, torque that the motor **12010** can apply when rotating the drive output **12012** in the second direction **12019**. In some instances, the first radius of curvature can be different than the second radius of curvature. In such instances, the maximum, or slip, torque that the motor **12010** can apply when rotating the drive output **12012** in the first direction **12017** can be different than the maximum, or slip, torque that the motor **12010** can apply when rotating the drive output **12012** in the second direction **12019**. In at least one such instance, the first radius of curvature can be larger than the second radius of curvature wherein, as a result, the maximum, or slip, torque in the first direction **12017** can be less than the maximum, or slip, torque in the second direction **12019**. Stated another way, the motor **12010** can apply a larger torque to the shaft **12020** when retracting the firing element than when advancing the firing element. Such instances may be advantageous when it may be desirable to retract the firing element so that the end effector of the surgical instrument can be re-opened and unclamped from the tissue, for example. In at least one instance, the first radius of curvature can be smaller than the second radius of curvature wherein, as a result, the maximum, or slip, torque in the first direction **12017** can be greater than the maximum, or slip, torque in the second direction **12019**. Stated another way, the motor **12010** can apply a larger torque to the shaft **12020** when advancing the firing element than when retracting the firing element.

[0453] Further to the above, referring primarily to FIGS. **163** and **164**, the biasing member **12036** can be resiliently supported by a spring collar **12032** positioned within a circumferential channel **12031** defined in the slip clutch housing **12037**. In such instances, the spring collar **12032**

and the biasing member **12036** can co-operate to apply a radially inward biasing force and/or to resist the radially outward movement of the drive element **12034**. The spring collar **12032**, in various instances, can comprise an annular body including a first free end **12033** and a second free end **12034**, wherein the annular body can resiliently expand when the radially outward force discussed above is applied thereto and resiliently contract when that radially outward force has ceased or diminished. In such instances, the first free end **12033** of the spring collar **12032** can move relative to the second free end **12034**.

[0454] The devices disclosed herein can be designed to be disposed of after a single use, or they can be designed to be used multiple times. In either case, however, the device can be reconditioned for reuse after at least one use. Reconditioning can include any combination of the steps of disassembly of the device, followed by cleaning or replacement of particular pieces, and subsequent reassembly. In particular, the device can be disassembled, and any number of the particular pieces or parts of the device can be selectively replaced or removed in any combination. Upon cleaning and/or replacement of particular parts, the device can be reassembled for subsequent use either at a reconditioning facility, or by a surgical team immediately prior to a surgical procedure. Those skilled in the art will appreciate that reconditioning of a device can utilize a variety of techniques for disassembly, cleaning/replacement, and reassembly. Use of such techniques, and the resulting reconditioned device, are all within the scope of the present application.

[0455] Preferably, the invention described herein will be processed before surgery. First, a new or used instrument is obtained and if necessary cleaned. The instrument can then be sterilized. In one sterilization technique, the instrument is placed in a closed and sealed container, such as a plastic or TYVEK bag. The container and instrument are then placed in a field of radiation that can penetrate the container, such as gamma radiation, x-rays, or high-energy electrons. The radiation kills bacteria on the instrument and in the container. The sterilized instrument can then be stored in the sterile container. The sealed container keeps the instrument sterile until it is opened in the medical facility.

[0456] Any patent, publication, or other disclosure material, in whole or in part, that is said to be incorporated by reference herein is incorporated herein only to the extent that the incorporated materials does not conflict with existing definitions, statements, or other disclosure material set forth in this disclosure. As such, and to the extent necessary, the disclosure as explicitly set forth herein supersedes any conflicting material incorporated herein by reference. Any material, or portion thereof, that is said to be incorporated by reference herein, but which conflicts with existing definitions, statements, or other disclosure material set forth herein will only be incorporated to the extent that no conflict arises between that incorporated material and the existing disclosure material.

[0457] While this invention has been described as having exemplary designs, the present invention may be further modified within the spirit and scope of the disclosure. This application is therefore intended to cover any variations, uses, or adaptations of the invention using its general principles. Further, this application is intended to cover such departures from the present disclosure as come within known or customary practice in the art to which this invention pertains.

1. A surgical stapler, comprising:
- an end effector comprising a plurality of deployable staples and a firing element;
- a motor configured to drive said firing element, wherein said motor comprises a primary set of coils and a secondary set of coils; and
- a control system in signal communication with said motor, wherein said control system comprises:
  - a battery;
  - a pulse width modulation circuit configured to control the duration of current pulses supplied from said battery to said motor; and
  - a switch configured to switch the electric motor between a plurality of operating states, wherein the plurality of operating states comprises:
    - a first operating state in which the primary set of coils are configured to drive said firing element; and
    - a second operating state in which said primary set of coils and said secondary set of coils are configured to drive said firing element.

2. The surgical stapler of claim **1**, wherein the battery supplies current pulses to said primary set of coils at a voltage that corresponds to the maximum torque of said primary set of coils during the first operating state.

3. The surgical stapler of claim **2**, wherein a surplus current is supplied to said secondary set of coils during the second operating state.

4. The surgical stapler of claim **3**, wherein said control system maximizes the surplus current supplied to said secondary set of coils during the second operating state based on the volt-ampere limit of said battery.

5. The surgical instrument of claim **1**, wherein said motor generates a first amount of torque during the first operating state, wherein said motor generates a second amount of torque during the second operating state, and wherein the second amount of torque is greater than the first amount of torque.

6. The surgical stapler of claim **5**, wherein said motor drives said firing element in a first direction during the first operating state, wherein said motor drives said firing element in a second direction during the second operating state, and wherein the second direction is opposite to the first direction.

7. The surgical stapler of claim **6**, wherein the first direction comprises a distally advancing direction, and wherein the second direction comprises a proximally retracting direction.

8. The surgical stapler of claim **1**, wherein said motor comprises a stepper motor.

9. A surgical stapler, comprising:
- an end effector comprising a plurality of deployable staples and a firing element;
- a control system, comprising:
  - a battery; and
  - a pulse width modulation circuit configured to control the duration of current pulses supplied from said battery; and
- a motor in signal communication with said control system and configured to drive said firing element, wherein said motor comprises:
  - a primary set of coils configured to generate a first amount of torque, wherein the first amount of torque drives said firing element in a first direction; and

a secondary set of coils configured to generate a second amount of torque, wherein the first amount of torque and the second amount of torque drive said firing element in a second direction.

10. The surgical stapler of claim **9**, wherein said battery is configured to supply current pulses to said primary set of coils at a voltage that corresponds to the maximum torque of said primary set of coils.

11. The surgical stapler of claim **10**, wherein said battery operably supplies a surplus current to said secondary set of coils.

12. The surgical stapler of claim **9**, wherein said control system maximizes the torque generated by said primary set of coils and the secondary set of coils when driving said firing element in the second direction.

13. The surgical stapler of claim **9**, wherein the second direction is opposite to the first direction.

14. The surgical stapler of claim **5**, wherein the second direction comprises a proximal direction.

15. The surgical stapler of claim **1**, wherein said motor comprises a stepper motor.

16. A surgical stapler, comprising:

an end effector comprising a plurality of deployable staples and a firing element;

a motor configured to drive said firing element, wherein said motor comprises a primary set of coils; and

a control system in signal communication with said motor, wherein said control system comprises:

a battery; and

a pulse width modulation circuit configured to control the duration of current pulses supplied from said battery to said primary set of coils.

17. The surgical stapler of claim **16**, wherein said motor further comprises a secondary set of coils, and wherein said control system comprises a switch configured to operably supply current from said battery to said secondary set of coils.

18. The surgical stapler of claim **17**, wherein said battery supplies current to said primary set of coils during a first operating state, and wherein said battery supplies current to said primary set of coils and said secondary set of coils during a second operating state.

19. The surgical stapler of claim **18**, wherein said motor drives said firing element distally during the first operating state, and wherein said motor drives said firing element proximally during the second operating state.

20. The surgical stapler of claim **16**, wherein said control system optimizes the torque generated by said motor.

21. (canceled)

* * * * *