(12) INTERNATIONAL APPLICATION PUBLISHED UNDER THE PATENT COOPERATION TREATY (PCT)

(19) World Intellectual Property Organization
International Bureau

(43) International Publication Date
18 May 2012 (18.05.2012)

PCT

(10) International Publication Number
WO 2012/064187 A1

(51) International Patent Classification:
E06B 1/32 (2006.01) *E06B 3/263* (2006.01)
E06B 3/12 (2006.01)

(21) International Application Number:
PCT/NL2011/050762

(22) International Filing Date:
8 November 2011 (08.11.2011)

(25) Filing Language: Dutch

(26) Publication Language: English

(30) Priority Data:
2005646 8 November 2010 (08.11.2010) NL

(71) Applicant *(for all designated States except US)*: **M.H.B. B.V.** [NL/NL]; Onderstalstraat 3, NL-6674 ME Herveld (NL).

(72) Inventor; and

(75) Inventor/Applicant *(for US only)*: **MATHIJSSEN, Markus Johannes Hendrikus** [NL/NL]; Praetoriumstraat 16, NL-6522 HN Nijmegen (NL).

(74) Agent: **JANSEN, C.M.**; Johan de Wittlaan 7, NL-2517 JR Den Haag (NL).

(81) Designated States *(unless otherwise indicated, for every kind of national protection available)*: AE, AG, AL, AM, AO, AT, AU, AZ, BA, BB, BG, BH, BR, BW, BY, BZ, CA, CH, CL, CN, CO, CR, CU, CZ, DE, DK, DM, DO, DZ, EC, EE, EG, ES, FI, GB, GD, GE, GH, GM, GT, HN, HR, HU, ID, IL, IN, IS, JP, KE, KG, KM, KN, KP, KR, KZ, LA, LC, LK, LR, LS, LT, LU, LY, MA, MD, ME, MG, MK, MN, MW, MX, MY, MZ, NA, NG, NI, NO, NZ, OM, PE, PG, PH, PL, PT, QA, RO, RS, RU, RW, SC, SD, SE, SG, SK, SL, SM, ST, SV, SY, TH, TJ, TM, TN, TR, TT, TZ, UA, UG, US, UZ, VC, VN, ZA, ZM, ZW.

(84) Designated States *(unless otherwise indicated, for every kind of regional protection available)*: ARIPO (BW, GH, GM, KE, LR, LS, MW, MZ, NA, RW, SD, SL, SZ, TZ, UG, ZM, ZW), Eurasian (AM, AZ, BY, KG, KZ, MD, RU, TJ, TM), European (AL, AT, BE, BG, CH, CY, CZ, DE, DK, EE, ES, FI, FR, GB, GR, HR, HU, IE, IS, IT, LT, LU, LV, MC, MK, MT, NL, NO, PL, PT, RO, RS,

[Continued on next page]

(54) Title: SYSTEM PROVIDED WITH PANELS, AND METHOD

(57) Abstract: A system provided with panels, for example glass sheets, and with substantially steel elements (1, 2, 3) extending parallel to edges of the panels, wherein thermally insulating parts (14) extend between said steel elements (1, 2, 3) and are connected by means of connecting means to connecting surfaces of the steel elements, wherein said connecting means comprise connecting element (11), which connecting elements (11) are each provided with a steel connecting flange (12).

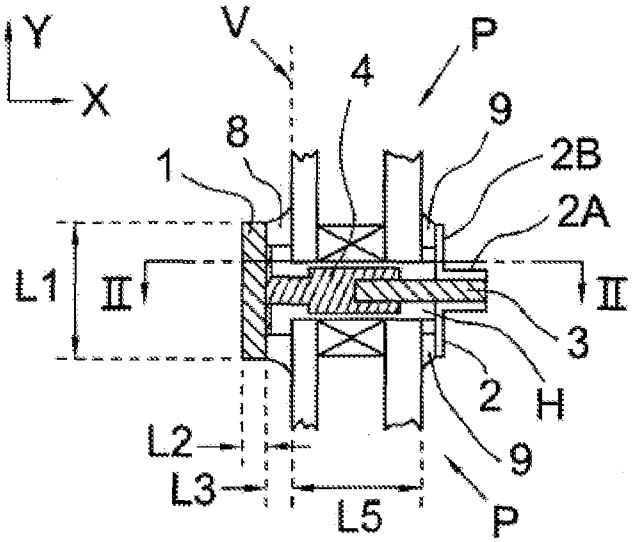

FIG. 1

WO 2012/064187 A1

SE, SI, SK, SM, TR), OAPI (BF, BJ, CF, CG, CI, CM, GA, GN, GQ, GW, ML, MR, NE, SN, TD, TG).

Published:

— *with international search report (Art. 21(3))*

— *before the expiration of the time limit for amending the claims and to be republished in the event of receipt of amendments (Rule 48.2(h))*

Title: System provided with panels, and method

The invention relates to a system provided with panels, for example, glass sheets, and with substantially steel elements extending parallel to edges of the panels, wherein thermally insulating parts extend between the steel elements and by means of connecting means are connected to connecting surfaces of the steel elements.

Such a system is known per se from the international patent application no. WO2010/002258 in the name of applicant. The known system comprises at least a first element which extends along a first edge of at least one panel, wherein the first element is manufactured from metal, and is of solid design. The system is furthermore provided with at least a second element which extends along a second edge of the at least one panel. In addition, the system is provided with a connection between the first and second element, which connection comprises at least a solid metal, preferably steel, connecting element. A thermally insulating part extends between the last-mentioned solid metal element and a first element.

An advantage of the system is that it can be manufactured from relatively little material and few different components, which is favorable in terms of environmental impact and cost price.

According to WO2010/002258 the thermally insulating part can be connected to the neighboring metal (for example, steel) elements by means of a clamping connection. To this end, a first element is provided with one or more clamping recesses and/or grooves, arranged to be engaged by clamping means and/or projections of another system part.

A disadvantage of the system is that when the system is loaded with rainwater, water may end up in the connecting face as a result of capillary action. Under the influence of the water the steel (for example, non-stainless steel) may start to rust at the connection, which gives rise to rust water, with all adverse consequences thereof.

Another disadvantage is that providing clamping recesses in said substantially steel elements is relatively costly, time consuming and hence little efficient.

DE 20 2009 006416 discloses a fireproof glass wall with frame profiles, for screening off two inner spaces. The glass plate is attached to the profile parts with adhesive. A hardwood part is arranged between two U-profiles, attached thereto by means of screws. Assembly of this system, also, is little efficient by the use of a large number of mounting screws. Further, this system is not intended for use as outer wall. For in the use of insulated glass, aeration is necessary, so that the procedure of fully cementing that is used in DE '416 is not possible. Without fully cementing, the construction will provide too little stability. Also, no water-tight coupling in the connecting face is achieved.

The present invention contemplates an improvement of the system mentioned in the preamble, whereby a thermally insulating part can be coupled to a substantially steel element in a considerably more efficient manner, and in particular such that local rust formation and/or rust water formation can be well counteracted.

To this end the system according to the invention is characterized by the features of claim 1.

Advantageously, the connecting means mentioned comprise connecting elements, which connecting elements are each provided with a steel connecting flange which by means of a fixing treatment is integrally fixed to a connecting surface of a steel element mentioned.

Preferably, the insulating parts are integrally fixed to respective connecting elements by means of clamping fixation, with deformation of those insulating parts.

It has been found that in this manner a good coupling between a thermally insulating part and a substantially steel element of the system can be obtained, thereby avoiding the provision of clamping recesses in steel

elements. The system according to the invention can be manufactured more rapidly than was possible hitherto, which entails a considerable cost reduction, even utilizing the extra parts (i.e., the connecting elements). An important advantage of the invention is furthermore that local rust formation and rust water spreading can be counteracted well.

Particularly good results appear to be achieved if the insulating (clamped and deformed) part is a fiber-reinforced part, and in particular is manufactured of fiber-reinforced plastic. It appears that a very durable, firm coupling can thus be achieved.

An advantageous, relatively compact and yet durable design of a connecting element as mentioned is a (stainless) steel U-profile. An insulating part as mentioned can be coupled, for example, by means of clamping to the steel U-profile, for example by pressing down the insulating part (partly) into the U-profile. It is noted that the connecting element may also be configured differently, for example as an H-profile or other profile.

During manufacture, the insulating parts may, for example, each be connected to the respective connecting element by a clamping connection, with the coupling comprising a deformation of the connecting element and/or of the insulating part. Optionally, a sealing means, for example sealant, or putty, is used to couple the insulating part water-tightly to the connecting element.

According to an extra advantageous elaboration of the invention an energy beam welding treatment is used, for example laser welding or electron beam welding, to fix the connecting flanges of the connecting elements to the connecting surfaces of the steel elements. In such a treatment a steel connecting flange as mentioned can be fused with the steel surface at at least a number of points by melting the flange locally under the influence of a high-energy beam. In an extra advantageous elaboration, a continuous welded joint is applied, to fuse the steel connecting flange throughout its length to the steel surface, so that penetration of moisture

and attendant rust formation and/or rust water spread can be extra well suppressed.

The invention furthermore provides an efficient method for manufacturing a system according to the invention, which method comprises at least:

-providing the steel elements, which comprise the steel connecting surfaces;

-fixing the connecting elements to the steel surfaces; and

-coupling the insulating parts to the connecting elements.

According to the invention, the insulating parts (which are preferably manufactured of fiber-reinforced material) are each coupled to the respective connecting element by a clamped connection, with the coupling comprising a deformation of the insulating part.

Preferably, fixing to the steel surfaces comprises a welding treatment whereby each connecting flange is (thermally) fused with the respective connecting surface by means of an elongate, uninterrupted connecting line (i.e., a continuous weld) throughout a length direction. In this way a desired water-tight connection can be obtained.

According to a further elaboration a high-energy welding beam, for example, an electron beam or a laser beam, can used in the welding treatment. With such a welding beam, in a relatively simple manner, a continuous welding line can be provided, with relatively constant fusion parameters (such as weld strength, weld size) in the longitudinal direction. The parts to be connected may, for example, be moved relative to an incident welding beam, and/or conversely the beam may be moved relative to the parts to be connected, to realize the fusion line.

Further advantageous elaborations of the invention are described in the subclaims. Presently, the invention will be elucidated on the basis of a number of exemplary embodiments and the drawings. In the drawings:

Fig. 1 shows a cross section of an exemplary embodiment of a system known per se;

Fig. 2 shows a cross-sectional view along line II-II of Fig. 1;

Fig. 3 shows a cross section of a part of a system according to a non-limitative exemplary embodiment of the invention; and

Fig. 4 shows a cross section of a connecting element of the system shown in Fig. 3.

Identical or corresponding features are indicated herein with identical or corresponding reference characters.

Figs. 1, 2 show a first non-limitative exemplary embodiment of a system, described per se in WO2010/002258, provided with one or more panels P, for instance multiple-glass sheet panel elements P, and with elongated elements 1, 2 which extend along edges of the panels P, parallel to those edges (in particular for holding the panels in position, for instance by exerting a clamping force on the panels P).

In the example, each panel P is a thermal insulation panel which is provided with two parallel glass sheets ("double glazing"). Also, a panel P can for instance comprise only one sheet (for example, of glass) or more than two (for example, three spaced apart parallel glass sheets). In Fig. 1, end faces of neighboring panels P bound a space H. The system P1, P2 shown in Fig. 1 may be positioned in different manners, for example, vertically, horizontally, or at an inclination (with respect to a horizontal plane). The panels P1, P2 can each comprise, for example, a window or door.

As shown in Fig. 1, the system comprises a first element 1 which extends along a first edge of at least one panel P, in this case along two first edges of two neighboring panels P. Thus, the first element 1 covers the edges of these two neighboring panels. Thus, the first element 1 covers the edges of these two neighboring panels (viewed in front view).

The first element 1 comprises, for instance, an element 1 extending along outer edges of the panels P. In particular, the first element

1 extends along two longitudinal edges of two panel parts P arranged (at a relatively short distance) with end faces opposite each other, to cover these longitudinal edges.

The first element 1 is of particularly slim design, having a (transversal) width L1, measured in a transverse direction (according to arrow Y) with regard to a respective panel edge (i.e., measured in a direction parallel to the panels P), which is less than approximately 5 cm. Preferably, each first element 1 has a maximum width L1 of 4 cm, preferably 3 cm, measured in a direction transverse to the longitudinal edges mentioned.

The present first element 1 has a very simple configuration, and is, for example, of solid steel design, having, for example, a substantially rectangular cross section. The present first element 1 is not provided with any recesses or cavities. The steel mentioned can be simple (non-stainless) steel, or high-alloyed stainless steel.

An outer side of the first element 1 remote from the panels P in this case is parallel to an inner side proximal to these panels P. The element 1 preferably extends parallel to (front) surfaces of the double glazed panels P. More preferably, the first element 1 is a solid element, made of steel. The first element 1 can for instance impart a particular stiffness and strength to the system, so that relatively large panels P can be durably held in position. As the drawing further shows, the first element 1 is located wholly outside a panel front plane V defined by the panels P (at least, wholly in an area located on a side of that plane V remote from the panels P).

A thickness L2 of the first element 1 can for instance be greater than 1 mm, in particular greater than 2 mm, for instance a thickness in the range of approximately 2 - 15 mm. A ratio between the width L1 and thickness L2 of the first element 1, i.e., L1:L2, can for instance be in the range of 10:1 to 2:1, in particular 6:1 to 3:1.

Preferably, first thermally insulating means 8 are provided between the first element 1 and the panels P, for instance sealant means or

plastic strips 8. The thermally insulating means (which are preferably manufactured from resilient material, for instance rubber, an elastomer or the like), are preferably also designed to form a watertight seal between panel outer sides and an opposite inner side of the first element 1. Preferably, an inner side of the first element 1 is at a relatively short distance L3 from opposite panel outer sides, for instance a distance L3 which is approximately equal to a thickness L2 of this element 1, or a smaller distance.

Further, after assembly, the system is provided with second elements 2, functioning, for instance, as glazing beads which extend along second edges of the panels P (these second panel edges are parallel to the first edges, and are located at the same oppositely arranged panel end faces as the first edges).

In the embodiment of Figs. 1, 2, each second element is also of very simple design, and consists in particular of an angle, comprising, in particular, a first flange 2a and a second flange 2b, bent over with respect to the first profile flange. The flanges 2a, 2b have for instance substantially the same dimensions. In the example, the first and second flange 2a, 2b of each second element 2 mutually include an angle of 90°. In the example, the second flange 2b has an inner side thereof facing the panel P. Preferably, second thermally insulating means 9 are provided between each first element 2 and an opposite panel side, for instance sealant means or plastic strips 9. These second thermally insulating means (which are preferably also manufactured from resilient material, for instance rubber, an elastomer or the like) can also be designed to form a watertight seal between a panel outer side and an opposite inner side of the second element 1. A second element can also be designed differently, and comprise, for instance, a tube, tubular profile, a U-shaped profile, a glazing bead, or the like.

Preferably, each second element 2 is also manufactured from steel (which may or may not be stainless steel). Alternatively, a second element can be manufactured from a metal (for instance aluminum), wood or plastic.

According to a non-limitative example, a width L4 of a first flange part 2a (measured in a direction X at right angles to the panels P) can for instance be smaller than 5 cm, and/or for instance be smaller than a thickness L5 of the panels P. In the exemplary embodiment, the flange width L4 is less than half the panel thickness L5. In this manner, a further compactness and slimness of the system can be achieved.

Further, an earlier-mentioned width L1 of a first element 1 can for instance be approximately equal to or even less than a panel width L5. Alternatively, the width L1 of a first element 1 may be greater than a panel width L5.

The system further comprises steel (which may or may not be stainless steel) carrier elements 3, as well as thermally insulating parts 4 to locally form a thermal separation in the system (at least, between the first and second element 1, 2).

Also the steel carrier element 3 as such (which likewise extends parallel along edges of the panels, and parallel to the first and second elements 1, 2) is preferably of a particularly simple design. In the example, the steel carrier element 3 consists of an elongated solid steel connecting element or carrier 3 (for instance, a supporting beam), preferably with a thickness (measured in a direction Y parallel to front face V) that is greater than 1 mm, in particular greater than 2 mm, for instance a thickness in the range of approximately 2-15 mm. The present solid carrier element 3 has no recesses or passages. As follows from the drawing, the carrier element 3 extends at right angles to the first element 1, and reaches between the panels P (i.e., between the end faces thereof). In an alternative embodiment a said carrier element is an elongated tubular profile (instead of a solid profile).

A width of the carrier element 3 (measured in a direction X at right angles with respect to the panels) is preferably at least approximately equal to a thickness L2 of the first system element 1. In the exemplary embodiment, the carrier element has a rectangular cross section; in this example, side surfaces of the carrier element 3 facing away from each other are parallel to each other. The carrier width (measured in the X direction) is for instance approximately equal to or even less than a panel width L5 mentioned.

In this case, the steel carrier element 3 reaches for at least 50% (for instance volume%, mass%, or both, as in this example) opposite (i.e. along) an end face of a panel P, in particular from a second element 2 in the direction of a first element 1. The carrier element 3 is therefore substantially (at any rate, at least for half of it) in the space H bounded by the end parts of the panels P.

Preferably, the carrier element 3 does not touch the panels P. In this example, the element 3 is indirectly connected to the first element 1 by means of the thermal intermediate piece 4. Side faces of the carrier element 3 are at a distance from opposite end faces of the panels P. The second elements 2 are connected directly (by the first flanges 2a integrally) to (side surfaces of) the carrier element 3. The connection between the carrier element 3 and the insulation part 4 is preferably completely in the space H (see Fig. 1).

As follows from the Figures, the thermally insulating part 4 is preferably located substantially (for instance for more than 50%, for instance volume%, mass%, or both, as in this example) in the system inner space H.

The insulating part 4 is manufactured from, for instance, plastic, rubber, an elastomer, or other suitable, thermally insulating material. The insulating part 4 is designed to substantially prevent heat transfer between the first and second element 1 and carrier 3. Further, the insulating part 4

can provide a wind-tight and watertight seal. Preferably, the insulating part 4 does not touch the panels P; in the example, relatively narrow gaps are present between the insulating part 4 and panel end faces. Each insulating part 4 can be manufactured in a particularly advantageous manner simply by means of a plastic extrusion process.

In Figs. 1-2, the thermally insulating part 4 is provided with a first connecting part 4M, to which the carrier 3 is connected, preferably utilizing a suitable (direct, mutual) glue connection. In particular, the first connecting part 4M is provided with a recess in which a part of the carrier 3 is received.

In the embodiment according to Figs. 1-2, the thermally insulating part 4 is provided with a second connecting part 4S, to which the first element 1 is connected, preferably utilizing a suitable glue connection and/or clamping connection. In this system known per se, the second connecting part 4S is provided with a front flap ("glue flap") 4F in which the first element 1 is fastened (glued).

A particularly advantageous connection (of the insulating part to steel elements 1, 3) according to the present invention is further elucidated hereinafter, with reference to Figs. 3-4, while further a relatively simple embodiment of an insulating part 14 is provided (without glue flap 4F and without glue recess).

The thermally insulating part 4 as such can be designed to be somewhat elastic, for instance resilient, but this is not requisite. The insulating part 4 can for instance be a rigid part, for instance a fiber reinforced part 4 (in particular of a part manufactured from insulating material, a fiber reinforced plastic, a composite, or the like).

According to a further elaboration, sealant means are provided between the thermally insulating part 4 on one side and the first element 1 and/or the carrier element 3 on the other. According to a further elaboration (not represented), the thermally insulating part 4 can be provided with one

or more grooves for receiving sealing means (for instance sealant means), for the purpose of a watertight connection to the first element 1 and/or the carrier element 3.

Fig. 3 shows a further elaboration of a part of the system shown in Figs. 1-2, and in particular an extra advantageous elaboration of a coupling of a thermally insulating part 14 to two steel elements 1, 3. The elements 1, 3 may be manufactured from non-stainless steel, or the more expensive stainless steel.

The two steel elements can comprise, for example, a first element 1 as mentioned and a carrier element 3 as mentioned. The panels, second elements, and optional sealing means 8, 9 and optional sealant means are not represented in Fig. 3 for the sake of clarity.

As follows from Fig. 3 additional connecting elements 11 are provided to couple an insulating part 14 to the respective steel elements 1, 3.

The insulating part 14 may be manufactured of the same material as the insulating part 4 shown in Figs. 1-2, and in particular has the same function (namely, substantially preventing heat transfer between the first and second element 1 and carrier 3). The insulating part 14 shown in Fig. 3, in a relatively simple embodiment, has a substantially rectangular cross section. The insulating part may also be designed differently, for example with one or more side flaps (for example, distancing side profiles or the like).

Preferably, the insulating part 14 is provided with coupling sections 14a, 14b facing the steel elements 1, 3, which in this example each have substantially rectangular cross sections. The coupling sections may be shaped differently, for example, with polygonal cross sections other than rectangular, with sidewardly projecting friction-increasing parts, for example, clamping ribs, and/or the like.

The coupling sections 14a, 14b, after assembly, are engaged by respective elongate connecting elements 11, preferably at least by means of

a strong clamping connection. As follows from Fig. 3, the insulating part 14 is preferably coupled centrally to an end face longitudinal side of the carrier element 3, utilizing an intermediate connecting element 11b. In the example the insulating part 14 is (in this case centrally) coupled to an inner surface of a first element 1 utilizing a respective connecting element 11a. In the exemplary embodiment, the connecting elements 11a, 11b have the same shape and the same dimensions, viewed in cross section, but this is not requisite.

Fig. 4 shows a connecting element 11 in more detail, in cross section, before the element is fixed to a steel element 1, 3. The present connecting element 11 is a steel (preferably stainless steel) connecting profile which consists of a number of parallel profile flanges. The connecting element 11 is in particular provided with an elongate steel connecting flange 12, which is arranged in particular to be fixed to a steel element 1, 3 by means of a thermal treatment, more particularly an energy beam welding treatment.

In this example, the element 11 is of relatively compact design and provided with only one steel connecting flange 12. Alternatively, different steel connecting flanges may be present, for example, two or three, to be fixed on two or three opposite surfaces of a steel element 1, 3.

According to a further elaboration, the connecting flange 12 of the steel connecting element 11 has a thickness X3, measured normal to the connecting surface, in the range of about 1-6.5 mm. Other dimensions are also possible.

The steel connecting element 11 is preferably provided with a recess 15 to receive at least a part of the insulating part 14. The recess in this example is bounded by two parallel side flanges 13 of the connecting profile 11. Preferably, a width X1 of this recess 15 (i.e., a distance between mutually facing surfaces of the side flanges 13) is slightly smaller than a width X2 of the part of the insulating part 14 to be received, in order that a

firmly clamping coupling can be achieved after insertion of the insulating part 14.

A thickness X4 of each of the side flanges 13 is preferably equal to the thickness X3 of the connecting flange, but that is not requisite.

In a relatively compact design, the connecting element 11 has a width L6, measured in a direction normal to said connecting surface, of less than 5 cm, in particular about 2 cm or less (for example, in the range of 0.5-1 cm).

As follows from the drawing, the present connecting element 11 is a U-profile, which also comprises the two oppositely extending, parallel side flanges 13 to define the recess 15. An alternative connecting profile comprises, for example, an H-profile, which on one side can present three steel connecting flanges to be fixed to three surfaces of a steel element 1, 3, and on the other side a recess to engage the insulating part 14. The connecting element may also be configured in a different manner.

As mentioned, the connecting element 11 is preferably fixed integrally to a connecting surface of a steel element 1, 3 by means of a fixing treatment. According to an extra advantageous, efficient and relatively fast method, the fixing treatment comprises an energy beam welding treatment, preferably laser beam welding, or alternatively electron beam welding. Use of laser beam welding has led to very good results.

More particularly, fixing comprises a welding treatment whereby the connecting flange 12 is fused with the respective connecting surface of a steel element 1, 3 along an uninterrupted, watertight connecting weld. The uninterrupted connecting weld can fuse the flange 12 substantially throughout its length (measured in a direction parallel to near panel longitudinal edges) to a steel element, so that penetration of water via the connection is avoided. Thus, rust issues associated with water penetration (such as formation and spread of rust water) can be counteracted particularly well.

It is noted that in an alternative method, a welding joint can be realized whereby the flange 12 is fixed to a steel element by means of different weld sections.

After the connecting element 11 has been attached to a respective steel element 1, 3, the insulating part 14, can be pressed down with a respective coupling section (14a, 14b) into the clamping recess 15 of the connecting element. The clamping leads in particular to a local deformation of the insulating part 14 (i.e., of the coupling section thereof). In addition, the clamping action can lead to a deformation of the connecting element 11.

Preferably, the insulating part is coupled at least water-tightly to an outer connecting element 11a (of a first element 1), or water-tightly sealed thereto, utilizing a sealing means, for example a sealant. Thus penetration of, for example, rainwater and local rust formation can be prevented extra well.

Assembly of the system comprises for instance a relatively simple method, comprising the steps (which can be performed in different orders) of

- providing at least a first element 1 (which is already provided with a connecting element 11a), at least a second element 2 and at least a carrier element 3 (which is already provided with a connecting element 11b);
- providing at least a panel P;
- providing along a first longitudinal edge of the panel P the first element 1 (for instance by bringing the panel in a suitable position with respect to the first element 1);
- directly or indirectly connecting to the first element 1 a said carrier element 3; and
- providing along a second longitudinal edge of the panel P the second element 2, which second element is connected to the connecting element.

Different first elements 1 can, for instance, be welded to each other to form a frame, which frame, after assembly, extends along different panel edges.

A first element 1 mentioned and carrier element 3 can for instance first be connected (directly or indirectly) to each other. Then, for instance, a second element 2 can be connected to the carrier element 3 (for instance after the panel is positioned along the first element 1).

A first element 1 and carrier element 3 can for instance first be connected (directly or indirectly) to each other utilizing an insulating part 14, which is coupled to the respective connecting elements 11a, 11b, for example according to an above-described pressing.

Preferably, the system is so assembled that the first and second elements 1, 2 (for example via optional first and second insulating means 8, 9) exert a clamping force directed towards each other, for the purpose of holding together the system 1, 2, 3, 14, P.

Thus the invention provides a particularly durable system, whereby rust formation and rust water spreading can be prevented well, while the system can be produced in a relatively efficient manner. Since spreading of rust water can be suppressed, rust staining on a respective facade can be avoided particularly well.

It will be clear to the skilled person that the invention is not limited to the exemplary embodiments described. Various modifications are possible within the framework of the invention as set forth in the following claims. In this application, the term "a" can mean, for instance, at least one, for instance, one or more. In this application, the term "solid element" means for instance that this element is not a tubular profile and, for instance, does not in itself enclose a space. In particular, the solid element in itself has no inside surfaces extending opposite to each other (but, for instance, only a continuous outside surface).

Furthermore, a first element may be of solid design, but can also comprise a hollow profile.

A carrier element, in an alternative embodiment, can comprise a hollow (tubular) profile.

A substantially steel element 1, 3 can consist, for example, of substantially simple (non-stainless) steel. As is generally known, such steel is an alloy of iron with (typically at most about 2%) carbon. For this reason the steel is sometimes referred to as non-alloyed or low-alloyed steel, and contains, for example, at most 5% of alloy elements excluding carbon.

In addition, a substantially steel element may be manufactured of a high-alloyed steel (with more than 5% alloy elements excluding carbon), in particular stainless steel (which contains, for example, at least 10% of chromium).

CLAIMS

1. A system provided with panels, for example, glass sheets, and with substantially steel elements (1, 3) extending parallel to edges of the panels, wherein thermally insulating parts (14) extend between said steel elements (1, 3) and are connected by means of connecting means to connecting surfaces of the steel elements (1, 3), characterized in that said connecting means comprise connecting elements (11), which connecting elements (11) are each provided with a steel connecting flange (12), wherein the insulating parts (14) are integrally fixed to respective connecting elements (11) by means of clamping fixation, with deformation of the insulating parts (14).

2. A system according to claim 1, wherein each thermally insulating part is a fiber-reinforced part (14), and in particular is manufactured of a fiber-reinforced plastic.

3. A system according to claim 1 or 2, wherein each connecting flange (12) by means of an elongate, continuous connecting weld throughout a longitudinal direction, is integrally fused with a connecting surface of the respective steel element (1, 3), for example by means of an energy beam welding treatment, for example, laser beam welding or electron beam welding.

4. A system according to any one of the preceding claims, wherein said connecting flange has a thickness, measured normal to the connecting surface, of less than 6.5 mm.

5. A system according to any one of the preceding claims, wherein the connecting element has a width, measured in a direction normal to said connecting surface, of less than 5 cm, in particular about 2 cm or less, for example, in the range of about 0.5-1 cm.

6. A system according to any one of the preceding claims, wherein the connecting element is manufactured substantially of stainless steel.

7. A system according to any one of the preceding claims, wherein the connecting element (11) is a U-profile.

8. A system according to any one of the preceding claims, wherein the connecting element (11) comprises a recess which receives at least a part of the insulating part (14).

9. A system according to any one of the preceding claims, wherein the insulating part on opposite sides is coupled to steel elements (1, 3) by respective connecting elements (11).

10. A system according to any one of the preceding claims, wherein the insulating part is water-tightly coupled to the connecting element (11), utilizing a sealing means, for example sealant.

11. A system according to any one of the preceding claims, wherein the steel elements comprise first elements (1) and carrier elements (3), wherein the connecting elements (11) are attached to end-face longitudinal sides of the carrier elements (3).

12. A method for manufacturing a system according to any one of the preceding claims, at least comprising:

-providing the steel elements (1, 3), which comprise the steel connecting surfaces;

-fixing the connecting flange (12) of the connecting elements (11) to the steel surfaces; and

-coupling the insulating parts (14) to the connecting elements (11);

wherein the insulating parts (14) are each coupled to the respective connecting element (11) by a clamped connection, with the coupling comprising a deformation of the insulating part (14).

13. A method according to claim 12, wherein fixing comprises a welding treatment whereby each connecting flange (12) is fused with the respective connecting surface by means of an uninterrupted, elongate connecting weld.

14. A method according to claim 13, wherein a high-energy welding beam, for example an electron beam or laser beam, is used in the welding treatment.

15. A method according to any one of claims 12-14, wherein the connecting elements (11) comprise U-profiles, wherein the insulating parts are coupled to the U-profiles by means of pressing.

16. A method according to any one of claims 12-15, wherein the thermally insulating parts to be clamped and deformed each comprise a fiber-reinforced part, and in particular are manufactured of a fiber-reinforced plastic.

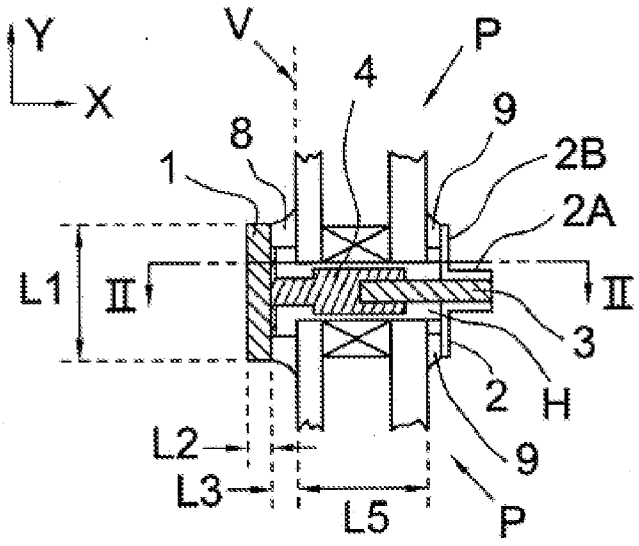

FIG. 1

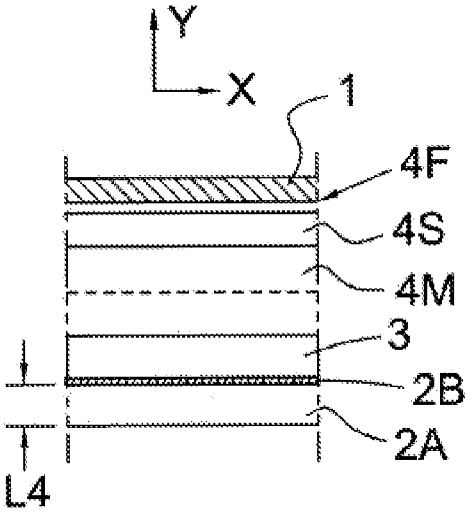

FIG. 2

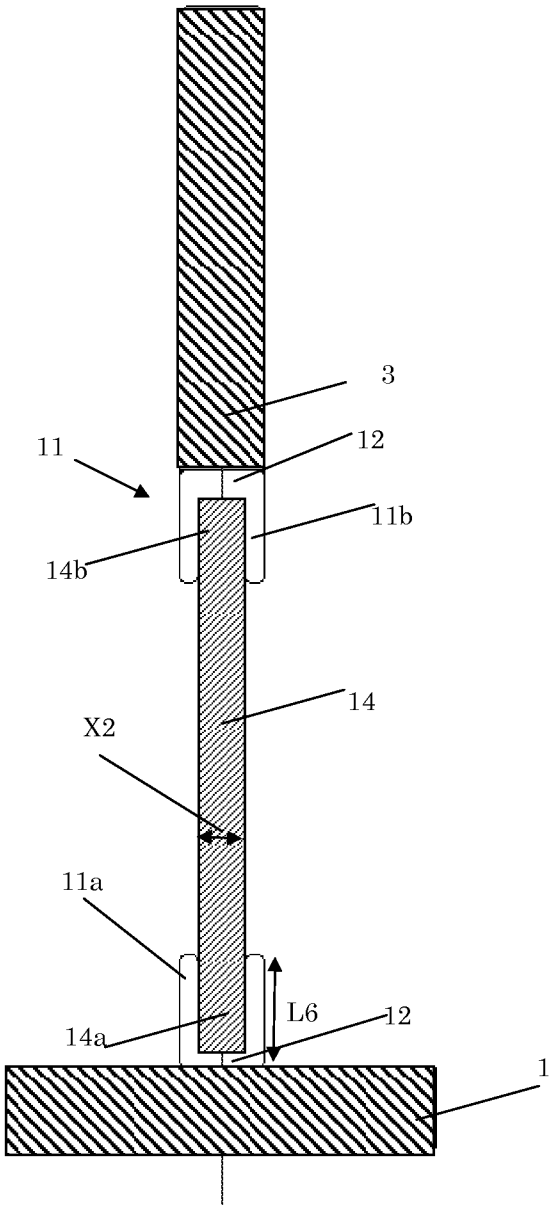

FIG. 3

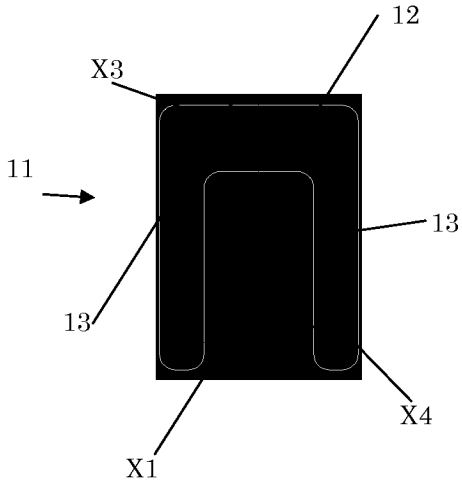

FIG. 4

INTERNATIONAL SEARCH REPORT

International application No
PCT/NL2011/050762

A. CLASSIFICATION OF SUBJECT MATTER
INV. E06B1/32 E06B3/12 E06B3/263
ADD.

According to International Patent Classification (IPC) or to both national classification and IPC

B. FIELDS SEARCHED

Minimum documentation searched (classification system followed by classification symbols)
E06B

Documentation searched other than minimum documentation to the extent that such documents are included in the fields searched

Electronic data base consulted during the international search (name of data base and, where practical, search terms used)
EPO-Internal

C. DOCUMENTS CONSIDERED TO BE RELEVANT

Category*	Citation of document, with indication, where appropriate, of the relevant passages	Relevant to claim No.
X	DE 20 2009 006416 U1 (PROMAT GMBH [DE]) 23 July 2009 (2009-07-23) the whole document	1-16
A	WO 2010/002258 A1 (M H B B V [NL]; MATHIJSSEN MARKUS JOHANNES HENDRIKUS [NL]; VOLMEYER RO) 7 January 2010 (2010-01-07) cited in the application the whole document	1-16
A	US 2004/025454 A1 (BURGESS NORMAN [GB]) 12 February 2004 (2004-02-12) figures 9-15 paragraph [0008] - paragraph [0011] paragraph [0044] - paragraph [0055]	1-16

-/--

[X] Further documents are listed in the continuation of Box C.

[X] See patent family annex.

* Special categories of cited documents :

"A" document defining the general state of the art which is not considered to be of particular relevance

"E" earlier document but published on or after the international filing date

"L" document which may throw doubts on priority claim(s) or which is cited to establish the publication date of another citation or other special reason (as specified)

"O" document referring to an oral disclosure, use, exhibition or other means

"P" document published prior to the international filing date but later than the priority date claimed

"T" later document published after the international filing date or priority date and not in conflict with the application but cited to understand the principle or theory underlying the invention

"X" document of particular relevance; the claimed invention cannot be considered novel or cannot be considered to involve an inventive step when the document is taken alone

"Y" document of particular relevance; the claimed invention cannot be considered to involve an inventive step when the document is combined with one or more other such documents, such combination being obvious to a person skilled in the art.

"&" document member of the same patent family

Date of the actual completion of the international search	Date of mailing of the international search report
2 February 2012	06/03/2012

Name and mailing address of the ISA/	Authorized officer
European Patent Office, P.B. 5818 Patentlaan 2 NL - 2280 HV Rijswijk Tel. (+31-70) 340-2040, Fax: (+31-70) 340-3016	Blancquaert, Katleen

2

Form PCT/ISA/210 (second sheet) (April 2005)

INTERNATIONAL SEARCH REPORT

International application No
PCT/NL2011/050762

C(Continuation). DOCUMENTS CONSIDERED TO BE RELEVANT

Category*	Citation of document, with indication, where appropriate, of the relevant passages	Relevant to claim No.
A	DE 200 02 142 U1 (MONTANSTAHL SA STABIO [CH]) 7 June 2001 (2001-06-07) figures 1, 11-14 page 11, line 29 - page 12, line 11 page 13, line 29 - page 14, line 20 page 19, line 26 - page 20, line 16 -----	1-16
A	EP 1 138 864 A1 (SCHUECO INT KG [DE]) 4 October 2001 (2001-10-04) abstract -----	1-16

2

INTERNATIONAL SEARCH REPORT

Information on patent family members

International application No
PCT/NL2011/050762

Patent document cited in search report	Publication date	Patent family member(s)	Publication date
DE 202009006416 U1	23-07-2009	DE 202009006416 U1	23-07-2009
		WO 2010127833 A1	11-11-2010
WO 2010002258 A1	07-01-2010	EP 2315899 A1	04-05-2011
		NL 2001750 C2	05-01-2010
		US 2011268898 A1	03-11-2011
		WO 2010002258 A1	07-01-2010
US 2004025454 A1	12-02-2004	NONE	
DE 20002142 U1	07-06-2001	AU 3539901 A	20-08-2001
		DE 20002142 U1	07-06-2001
		EP 1124035 A1	16-08-2001
		TW 464727 B	21-11-2001
		WO 0159244 A1	16-08-2001
EP 1138864 A1	04-10-2001	AT 275233 T	15-09-2004
		DE 10016012 A1	18-10-2001
		EP 1138864 A1	04-10-2001