May 7, 1929. L. S. ABBOTT 1,711,821

FURNACE CONSTRUCTION

Filed March 17, 1927 3 Sheets-Sheet 1

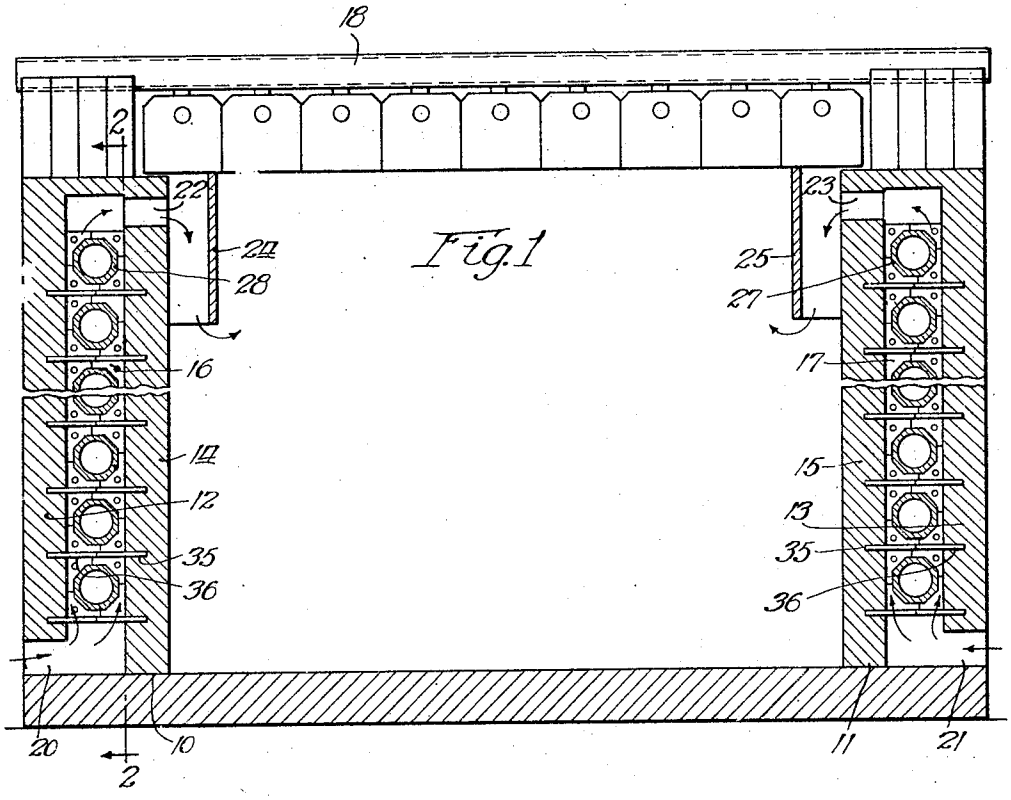

Fig. 1

Fig. 6

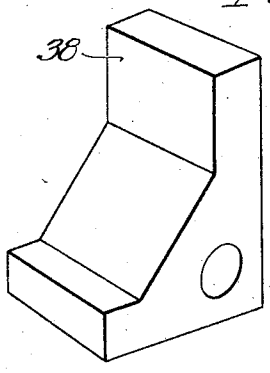

Fig. 5

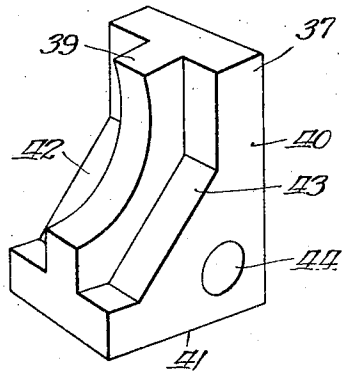

Inventor
Lyle Stockton Abbott
by Kabel & Banning Attys.

May 7, 1929. L. S. ABBOTT 1,711,821

FURNACE CONSTRUCTION

Filed March 17, 1927 3 Sheets-Sheet 2

Fig. 2

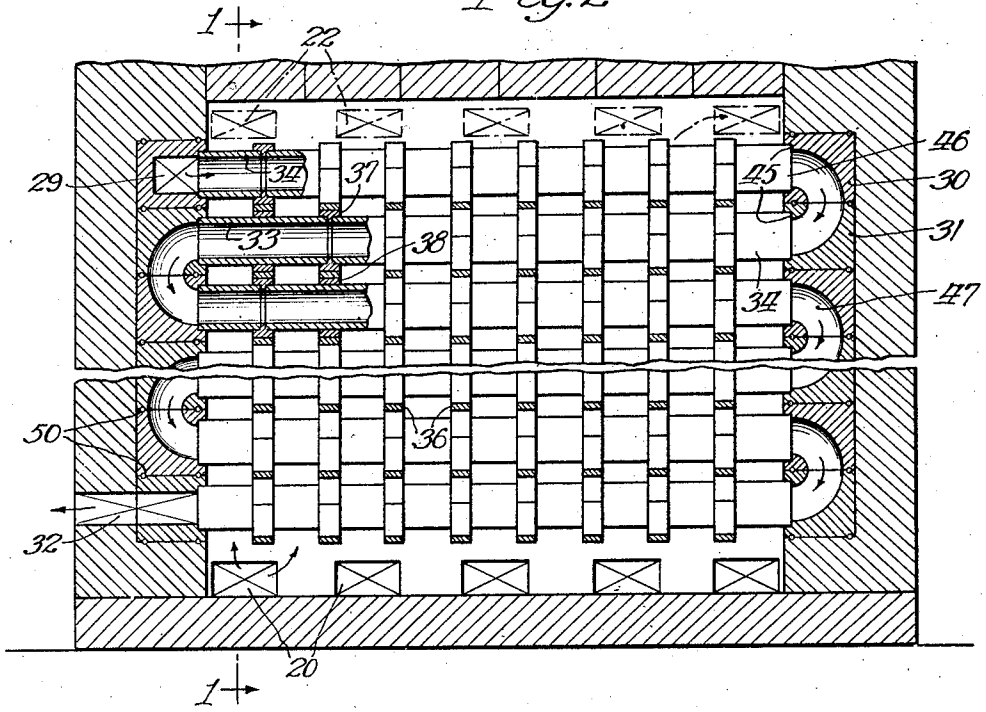

Fig. 3

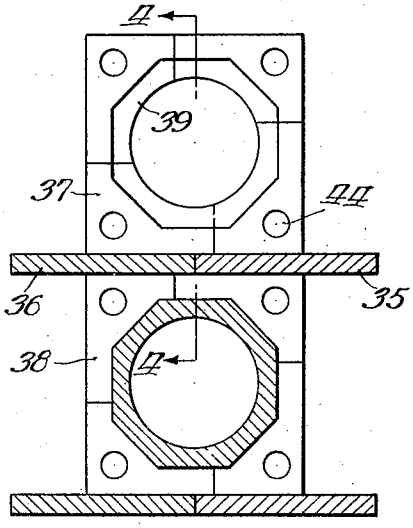

Fig. 4

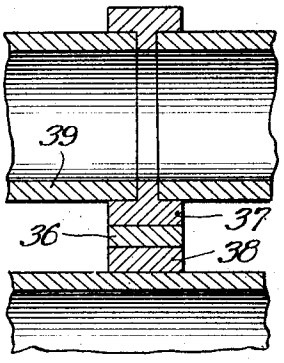

Inventor
Lyle Stockton Abbott
by Zabel + Banning Attys.

May 7, 1929. L. S. ABBOTT 1,711,821

FURNACE CONSTRUCTION

Filed March 17, 1927 3 Sheets-Sheet 3

Fig. 7

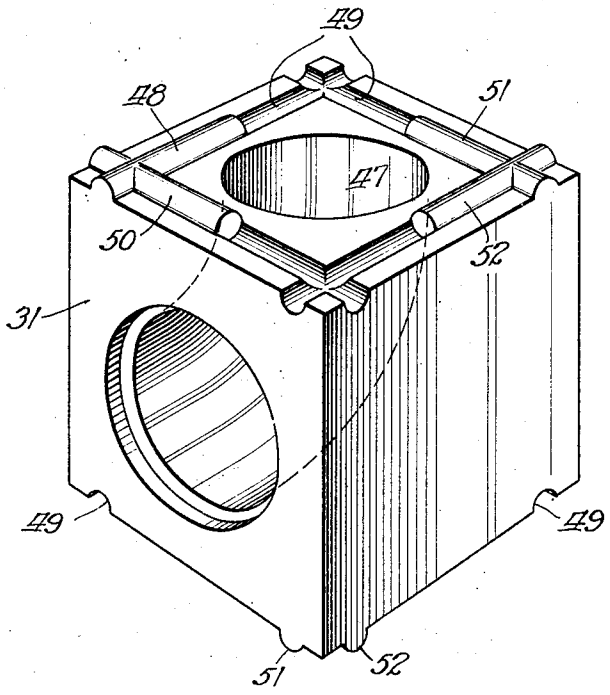

Inventor
Lyle Stockton Abbott
by Zabel & Banning Attys

Patented May 7, 1929. 1,711,821

UNITED STATES PATENT OFFICE.

LYLE STOCKTON ABBOTT, OF CHICAGO, ILLINOIS.

FURNACE CONSTRUCTION.

Application filed March 17, 1927. Serial No. 176,091.

My invention relates to furnace constructions, and more particularly to a device of this character in which pre-heated air is introduced into the combustion chamber to supply the necessary amount of air for complete combustion. The purpose of the invention is primarily to heat the air introduced by the utilization of the gaseous products of combustion.

Another object of the invention is to provide the pre-heating means in the walls of the furnace and so arrange the passage of the air and products of combustion that the furnace lining at the lower portion thereof adjacent the fuel bed is cooled by the air to be pre-heated.

It is a further object of the invention to provide the furnace walls having air spaces therein, and to provide in these air spaces conduits for the products of combustion which are so supported as to prevent any sagging of the conduits or any movement out of line within the air spaces. In order to carry out this purpose I provide novel supports which consist of cross ties anchored within the furnace walls on opposite sides of the air space, and supporting blocks carried by the cross ties, which completely surround the conduits and lock them against both vertical and lateral movement within the air spaces.

The conduits are preferably made up of lengths of tile which are so arranged in horizontal rows that the joints in one row do not align vertically with the joints in the rows next above or below. The supporting means surround each of these joints and are provided with portions extending between the ends of the tile to prevent leakage of the products of combustion into the air space or leakage of the air into the conduit. Each length of tile is also supported intermediate its ends so that the conduit within the air space has all portions thereof so interlocked as to prevent any sagging or movement out of place by the failure of any one support therefor.

Another purpose of the invention is to provide novel means at the ends of the horizontal rows of hollow tile to connect them in series to provide a continuous passageway extending back and forth from one end to the other of the wall and from top to bottom thereof, these novel means serving to seal the joints between the horizontal rows and prevent any leakage at these points.

Other objects and advantages of the invention will appear as the description proceeds, when taken in connection with the accompanying drawings. However, I wish it to be distinctly understood that I do not intend to limit myself to the exact details shown and described, but that I intend to avail myself of all such modifications as would occur to one skilled in this art and as would fall within the scope of the claims.

In the drawings,—

Fig. 1 is a sectional view taken transversely through the furnace along the line 1—1 of Fig. 2;

Fig. 2 is a sectional view longitudinally of the wall along the line 2—2 of Fig. 1;

Fig. 3 is a detail section taken transversely through a pair of rows of the conduit, showing the supporting blocks for the conduit and their relation to the cross-tie members connecting the outer and inner portions of the wall;

Fig. 4 is a section on the line 4—4 of Fig. 3;

Fig. 5 is a perspective view of one of the supporting blocks used at the junction of two lengths of tile;

Fig. 6 is a perspective view of a supporting block used intermediate the ends of the lengths of tile; and

Fig. 7 is a perspective view of the end blocks used to connect the adjacent rows of tile to form a complete passageway from top to bottom of the furance wall.

Referring now in detail to the drawings, I show in Fig. 1 a furnace having side walls 10 and 11 which, as shown, consist of the outer sections 12 and 13 and the inner sections 14 and 15, spaced from each other to provide air spaces 16 and 17 therebetween. These walls may be constructed of any suitable material commonly used for such purpose. The top of the furnace is closed by means of the arch or roof 18, which is supported, as shown, by the side walls of the furnace. Air inlets are provided at 20 and 21 to the air spaces 16 and 17 at the lower portions thereof, and adjacent the top of the side walls of the furnace the inner walls thereof are provided with openings 22 and

23 throughout the length of the side wall to permit passage of air from the air spaces into the furnace chamber.

In order to direct the air downwardly over the fuel bed, I provide the baffle walls 24 and 25, which, as shown in Fig. 1, are spaced inwardly from the furnace walls and extend downwardly from the roof a substantial distance into the furnace. These baffles may be constructed of any suitable material capable of withstanding the heat within the furnace, and may be supported in any suitable manner from the side walls.

The structure hereinbefore described provides a passage for the air from the exterior of the furnace upwardly between the inner and outer sections of the side walls, and downwardly from the inner sections and the baffles into the furnace chamber. This air coming directly in contact with the inner section of the furnace wall will tend to cool it, particularly at the lower portion thereof, while at the same time the air will take up a certain amount of heat as it passes upwardly through the air spaces.

In order to provide means for more thoroughly preheating the air as it passes through the air spaces so as to bring it as nearly as possible to the temperature within the furnace, I provide the conduits 27 and 28, which, as shown in Fig. 2, are connected by means of the openings 29 with the interior of the furnace adjacent the top and at the rear end thereof. These conduits then extend horizontally to the forward end of the furnace, where a passage is provided by means of the blocks 30 and 31 to a second horizontal row below the first row, and this row is in turn connected at the rear end of the furnace with the row next below, and so on until the bottom of the air space is reached, the last row of the conduit being connected by means of the opening 32 to the exterior of the furnace, and this opening may lead to the stack of the furnace for the discharge of the products of combustion.

The conduits, as shown clearly in Fig. 2, are made up of a plurality of long lengths of tile 33 in each row, and a short length of tile 34 co-operating therewith. As shown in Fig. 2, the short lengths of tile are alternately placed at the front and rear end of the furnace so that the several rows of tile have their joints occurring substantially midway between the joints in the rows next above and next below, and in this manner no two vertically adjacent rows have the joints in the hollow tile coming directly in vertical alignment.

In order to support the tile in place, I provide the cross-tie members 35 in the inner walls co-operating with cross-tie members 36 in the outer wall at spaced intervals longitudinally of the wall of the furnace between each row of tile. As shown, these cross-tie members occur below each joint in the conduit and also below the mid-point of each long length of tile.

Supported on these tile are the supporting chair blocks 37 and 38. The blocks 37, as shown, are used at the joints between lengths of tile and have the inwardly projecting portion 39 which extends between the adjacent ends of the tile and forms an abutment therefor to hold them against longitudinal movement. The supporting blocks, as shown, are used in sets of four and completely surround the tile. These blocks, as shown clearly in Fig. 5, have a long leg portion 40 and a short portion 41 extending at substantially right angles to each other, and the inner faces of these portions are cut out, as at 42 and 43, to provide seats for the ends of the tile, which are in the present instance octagonal in cross section, with the inner bore of the tile being round. The portions 39 on the supporting blocks form with the portions 42 and 43 a shoulder against which the end of the tile may fit snugly, and, if so desired, a suitable cement may be applied on this shoulder to more thoroughly seal the joint. These supporting blocks are also provided with the opening 44 extended therethrough, which reduces the amount of material in the block at the corner between the portions 40 and 41 and enables them to be evenly shrunk in firing without breakage.

The supporting blocks 38 are similar in every way to the supporting blocks 37 except for the fact that they are not provided with the inwardly projecting portion 39, since the blocks 38 are not to be used at the junction of two tile, but are to be used intermediate the ends of the tile and fit snugly around the same.

Thus it will be seen from the above description and the showing in Fig. 2 that each long length of tile is supported at each end and midway of its ends by means of the supporting chair blocks and the cross ties, and, furthermore, that each joint in the tile has directly beneath it a support, which is in turn supported by the cross ties immediately above the mid-point of a tile next below. This effectively ties the lengths of tile together in their horizontal position and prevents any danger of sagging at the joints.

It will also be noted from the showing in Figs. 1 and 3 that the supporting chair blocks which completely surround the tile hold them spaced from the sides of the walls bounding the air space and prevent them from moving laterally within the air space into contact with either wall. This insures perfect alignment of the horizontal rows in the conduit at all times.

The end blocks 30 and 31, as shown, are recessed at 45 to receive the ends of the

horizontal rows of tile, and these end blocks, thus shown in Fig. 7, each have the curved elbow openings 46 therethrough, with one face of the opening leading from the shoulder 45, and the other face 47 thereof coinciding with the face of the next adjacent block to provide a curved passageway connecting the two horizontal rows of tile. The blocks 30 and 31, as shown clearly in Fig. 7, which is a detail view of the block 31, are provided on their upper and lower faces with tongues and grooves. It will be noted from Fig. 7 that these tongues and grooves extend completely around the opening 46. As shown in Fig. 7, these tongues and grooves consist of a projection 48 extending substantially one half the distance across the face of the block and being substantially semicylindrical in shape, and the groove 49 extending from the end of the projection 48 the rest of the distance across the face of the block and being substantially semicylindrical and slightly larger than the projection 48 so as to receive a corresponding projection on a similar block when placed face to face thereto. As shown, these projections and grooves are provided adjacent each side edge of the top face of the block 31, the projections 48 and 50 crossing each other. Similarly, the projections 51 and 52 cross each other, while the grooves at the other corners likewise intersect. The bottom face of the block 31, as shown by the dotted lines, is provided with similar projections and grooves to those in the top face, but on the bottom face of the block the projecting portions are placed adjacent the corners which on the top face of the block have the grooves adjacent thereto.

By this construction it is possible to place one block on top of the other and have the projections thereon engage with the grooves in the other block, with the grooves in the first block receiving projections on the other block, and in this manner the two blocks will fit directly face to face and be interlocked so that no movement is possible relative to each other along the faces which are in engagement. The provision of the grooves and projections also effectively seals the space between the two blocks so that no gas can escape outwardly from the openings or passageways 46.

From the above description, it is the thought that the purpose and construction of this device will be clearly apparent to one skilled in this art; and having thus described my invention, what I claim and desire to secure by Letters Patent of the United States is:

1. In a furnace construction, means for supplying preheated air to the combustion chamber comprising side walls having air spaces therein, means for supplying air to the lower portions of said spaces, means for directing air from the upper portions of said spaces into the furnace chamber, and means for directing the heated products of combustion from said furnace downwardly through said spaces, said last named means comprising conduits in said spaces made up of lengths of hollow tile arranged in spaced horizontal rows, the ends of said rows being connected to provide a continuous passageway in each space from top to bottom thereof, and supporting means for said rows comprising cross-tie members beneath the joints of said lengths of tile and supporting blocks carried by said cross-tie members engaging said tile.

2. In a furnace construction, means for supplying preheated air to the combustion chamber comprising side walls having air spaces therein, means for supplying air to the lower portions of said spaces, means for directing air from the upper portions of said spaces into the furnace chamber, and means for directing the heated products of combustion from said furnace downwardly through said spaces, said last named means comprising conduits in said spaces made up of lengths of hollow tile arranged in spaced horizontal rows, the ends of said rows being connected to provide a continuous passageway in each space from top to bottom thereof, and supporting means for said rows comprising cross-tie members beneath the joints of said lengths of tile and supporting blocks carried by said cross-tile members engaging said tile, said blocks extending around said tile and spacing the same from the side walls of said air space.

3. In a furnace construction, means for supplying preheated air to the combustion chamber comprising side walls having air spaces therein, means for supplying air to the lower portions of said spaces, means for directing air from the upper portions of said spaces into the furnace chamber, and means for directing the heated products of combustion from said furnace downwardly through said spaces, said last named means comprising conduits in said spaces made up of lengths of hollow tile arranged in spaced horizontal rows, the ends of said rows being connected to provide a continuous passageway in each space from top to bottom thereof, and supporting means for said rows comprising cross-tie members beneath the joints of said lengths of tile and supporting blocks carried by said cross-tie members engaging said tile, said blocks comprising a plurality of identical blocks having their inner faces conforming in contour to the tile and having their ends in engagement so as to completely surround said tile.

4. In a furnace construction, means for supplying preheated air to the combustion chamber comprising side walls having air spaces therein, means for supplying air to

the lower portions of said spaces, means for directing air from the upper portions of said spaces into the furnace chamber, and means for directing the heated products of combustion from said furnace downwardly through said spaces, said last named means comprising conduits in said spaces made up of lengths of hollow tile arranged in spaced horizontal rows, the ends of said rows being connected to provide a continuous passageway in each space from top to bottom thereof, and a plurality of blocks at each joint between two lengths of tile for spacing said rows, said blocks surrounding said tile and engaging the side walls on opposite sides thereof, portions of said blocks extending between the ends of adjacent lengths of tile.

5. In a furnace construction, means for supplying preheated air to the combustion chamber comprising side walls having air spaces therein, means for supplying air to the lower portions of said spaces, means for directing air from the upper portions of said spaces into the furnace chamber, and means for directing the heated products of combustion from said furnace downwardly through said spaces, said last named means comprising conduits in said spaces made up of lengths of hollow tile arranged in spaced horizontal rows, the ends of said rows being connected to provide a continuous passageway in each space from top to bottom thereof, and supporting means for said rows comprising cross-tie members beneath the joints of said lengths of tile and supporting blocks carried by said cross-tie members engaging said tile, said blocks having portions projecting between adjacent lengths of tile and spacing the ends thereof from each other.

6. In a furnace construction, having air spaces in the walls thereof and hollow tile conduits in said air spaces, means for supporting said conduits comprising cross ties embedded in said walls and supports carried by said cross ties encircling said conduits and spacing the same from the walls on opposite sides thereof, said supports comprising a plurality of complementary blocks having their inner faces engaging said conduits and each having an outer face engaging a cross tie and an outer face engaging a side wall bounding said air space.

7. In a furnace construction a wall structure having an air space therein, rows of hollow tile in said space, and means for connecting the ends of adjacent rows together comprising a pair of blocks each having an opening therethrough, said openings having one end thereof coinciding with the end of a hollow tile and their other ends coinciding with each other to form a passage-way through said blocks from one tile to the other, and complementary interlocking means on the engaging faces of said blocks to lock said blocks in position.

8. In a furnace construction a wall structure having an air space therein, rows of hollow tile in said space, and means for connecting the ends of adjacent rows together comprising a pair of blocks each having an opening therethrough, said openings having one end thereof coinciding with the end of a hollow tile and their other ends coinciding with each other to form a passageway through said blocks from one tile to the other, and complementary interlocking projections and recesses on the engaging faces of said blocks to lock said blocks in position.

9. In a furnace construction a wall structure having an air space therein, rows of hollow tile in said space, and means for connecting the ends of adjacent rows together comprising a pair of blocks each having an opening therethrough, said openings having one end thereof coinciding with the end of a hollow tile and their other ends coinciding with each other to form a passageway through said blocks from one tile to the other, and complementary interlocking means on the engaging faces of said blocks surrounding said openings to lock said blocks in position and seal them together to prevent leakage of air between said blocks.

In witness whereof, I hereunto subscribe my name this 14th day of March, A. D. 1927.

LYLE STOCKTON ABBOTT.