May 21, 1940. M. MALLORY 2,201,381

CARBURETING AND IGNITION SYSTEM FOR INTERNAL COMBUSTION ENGINES

Filed March 2, 1940

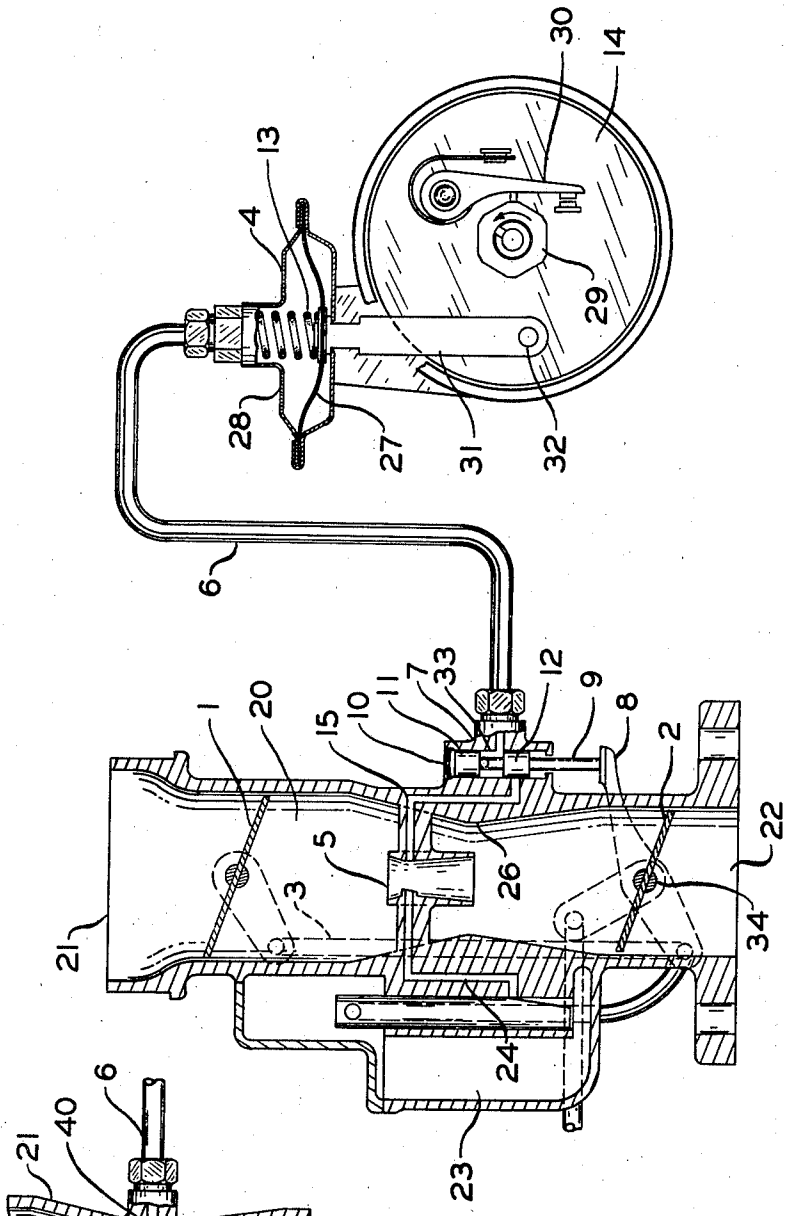

FIG 1

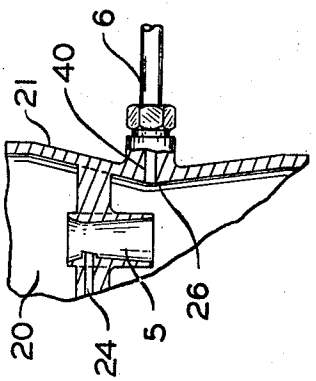

FIG 2

INVENTOR.
MARION MALLORY

BY Barnes, Kisselle, Laughlin & Raisch
ATTORNEYS.

Patented May 21, 1940

2,201,381

UNITED STATES PATENT OFFICE

2,201,381

CARBURETING AND IGNITION SYSTEM FOR INTERNAL COMBUSTION ENGINES

Marion Mallory, Detroit, Mich.

Application March 2, 1940, Serial No. 321,947

7 Claims. (Cl. 123—117)

This invention relates to a carbureting and ignition system for an internal combustion engine.

In the conventional type of ignition system, a centrifugal governor is used to advance the spark timing as the engine speed increases, and additional spark advance is added to the centrifugal governor spark advance by vacuum means. This additional advance of spark takes place only when the engine is working under light loads or on part throttle. The vacuum between the engine throttle and manifold is used for the power to operate the vacuum spark advance. In such systems, it can be seen that both a centrifugal governor and a vacuum spark advance device is required.

In my invention, I eliminate the centrifugal speed governor. In my system, a spark advance curve is produced equivalent to the one produced by the centrifugal governor by using the vacuum created by the speed and flow of air through the carburetor itself. In other words, as the air flow is increased through the carburetor, the spark is advanced in accordance with the engine speed because the speed of the air through the carburetor is in direct relation to engine speed, and, since the vacuum is increased as the speed of the air increases, I utilize the vacuum to advance the spark which produces a spark curve in relation to engine speed.

My carburetor is so constructed that, when the engine is operating under light loads or part throttle, to check the air flow, the vacuum is increased in the mixing chamber, and I utilize this vacuum to give additional spark advance for light load and part throttle operation.

In view of the above it will be seen that the object of my invention is to produce a carburetor vacuum operated spark advancing and retarding mechanism which will give proper ignition timing under all operating conditions of the internal combustion engine and which is considerably cheaper to make than the ignition timer with the centrifugal speed governor.

Fig. 1 is a sectional view partly in elevation showing the vacuum spark advance mechanism and carburetor.

Fig. 2 is a fragmentary section showing a modified form of the invention.

Referring to Fig. 1, valves 1 and 2 are connected together by linkage 3 so that they open and close in unison. Suction device 4 is connected into venturi or mixing chamber 5 by conduit 6 and through valve mechanism 7.

It will be understood that the vacuum conditions in the mixing chamber 5 of my carburetor are different than in the conventional plain tube carburetor. For example, in the plain tube carburetor, the mixing chamber suction is lower when the throttle is partly open than it is when the throttle is wide open. In my carburetor, the vacuum is higher in the mixing chamber when the throttle is partly open than when it is wide open. This produces an ideal condition for ignition timing because it is under light loads and on part throttle that the higher vacuum is used to give more spark advance, and, when the throttle is opened, the vacuum decreases and gives less spark advance.

The carburetor comprises a throat 20 having an air intake opening 21 and a fuel mixture outlet 22 into the engine intake manifold. Fuel is drawn from the float bowl 23 through passageway 24 into the mixing chamber or venturi 5. For purposes of description rather than by way of limitation, the carburetor throat 20 is also provided with venturi 26.

The suction device 4 comprises a flexible diaphragm 27 mounted in housing 28. The diaphragm on one side is connected by conduit 6 and passageway 15 with the venturi 5. The diaphragm on the other side is subjected to atmospheric pressure. The timing mechanism is conventional and as shown consists of the usual rotatable cam 29 which rotates in the direction of the arrow. The electrical circuit breaker 30 is mounted on plate 14 which is rotatable clockwise through a few degrees from the full line position shown to advance the spark timing. As shown, the plate 14 is in spark retarding position. Plate 14 is connected with the diaphragm 27 by connecting rod 31, one end of which is pivotally connected to plate 14 as at 32 and the other end of which is fixed to the diaphragm 27.

Communication between conduit 6 and passageway 15 is controlled by a sliding valve consisting of pistons 11 and 12 mounted in the cylindrical opening 33 in valve housing 7. The upper end of cylinder 33 is open to atmosphere through aperture 10. The valve 11, 12 is provided with a valve stem 9 which is connected to crank arm 8. Crank arm 8 is fixed to pintle 34 upon which throttle valve 2 is mounted. Thus, opening and closing of throttle valve 2 acts upon crank 8 and valve stem 9 to open and close valve 11, 12.

The operation of my system is as follows:

Assuming the engine is idling and valves 1 and 2 are almost closed, there will be an existing vacuum in the mixing chamber between the two valves of approximately ½" of mercury. The

suction device 4 is powerful and will start to advance the spark at $\frac{3}{16}$'' of vacuum in mercury. However, the spark will not be advanced when the engine is idling because the vacuum is shut off from suction device 4 by the valve 12. When the throttle 2 is closed, arm 3 moves the small pistons 11 and 12 upwardly so that piston 12 closes passageway 15 and shuts off the suction device from the mixing chamber and air bleeds the suction device through the small hole 10. There is just a slight leakage around piston 11 when it is in its upper position to to permit sufficient air bleed of suction device 4. It is necessary to air bleed this device so that compression spring 13 will retard the timer plate 14. As the throttle valves 1 and 2, which operate simultaneously, are opened, the piston 12 moves downwardly placing passageways 15 and 6 in communication and connects the suction device to the mixing chamber or venturi 5 through conduits 6 and 15. The vacuum will immediately advance the timer plate 14.

As the valves 1 and 2 are further opened, the vacuum will continue to increase as long as valves 1 and 2 restrict the engine breathing or suction, but as soon as the valves are opened wide enough so that they no longer restrict the engine breathing or suction, the vacuum in the mixing chamber 5 will decrease and the spark timing will retard. Advancing of the spark now depends entirely on the vacuum created in the mixing chamber or venturi 5 by the speed of the air flowing through the venturi.

It will be observed by the drawing and explanation that my system produces two spark advance curves—one for light load or part throttle, which gives more advance, and one for wide open throttle or full load, which gives less advance. Thus the venturi suction in the carburetor is used for wide open throttle spark advance and the mixing chamber vacuum for part throttle advance.

Although the suction device 4 is never subjected to the full intake manifold vacuum due to the action of valve 12, however, the system will work without this valve 12. In the absence of valve 12 the spark would be considerably advanced at idle but not enough to cause trouble.

The modified form of the invention shown in Fig. 2 is identical with that shown in Fig. 1 except that valve 12 is omitted and conduit 6 communicates with the large venturi 26 by means of passageway 40. The carburetor is identical with that shown in Fig. 1. Due to the absence of valve 12, the spark is considerably advanced at idle but not enough to cause trouble.

I claim:

1. In an internal combustion engine the combination of an ignition timer, a fuel mixture intake passageway including a venturi, two throttle valves spaced apart in series in said passageway one on each side of the venturi arranged to open and close in unison, suction controlled means for varying the position of the timer, and a passageway connecting the suction means with the venturi whereby the said means is controlled to vary the position of the timer by the suction produced by the flow of air through the venturi at wide open throttle and by the suction of the mixing chamber for part open throttle.

2. In an internal combustion engine the combination of an ignition timer, a fuel mixture intake passageway including a venturi, a second venturi positioned in the first venturi, two throttle valves spaced apart in series in said passageway one on each side of the venturi arranged to open and close in unison, suction controlled means for varying the position of the timer, and a passageway connecting the suction means witn the second venturi whereby the said means is controlled to vary the position of the timer by the suction produced by the flow of air through the second venturi at wide open throttle and by the suction of the mixing chamber for part open throttle.

3. In an internal combustion engine the combination of an ignition timer, a fuel mixture intake passageway including a venturi, two throttle valves spaced apart in series in said passageway one on each side of the venturi arranged to open and close in unison, a suction chamber for varying the position of the timer, and a passageway connecting the suction chamber with the venturi, and means responsive to a predetermined suction in said chamber to advance the timer whereby the said means is controlled to vary the position of the timer by the suction produced by the flow of air through the venturi at wide open throttle and by the suction of the mixing chamber for part open throttle.

4. In an internal combustion engine the combination of an ignition timer, a fuel mixture intake passageway including a venturi, two throttle valves spaced apart in series in said passageway one on each side of the venturi arranged to open and close in unison, suction controlled means for varying the position of the timer, and a passageway connecting the suction means with the venturi, valve means in said passageway operatable when the valve is in closed or idling position to close the passageway between the venturi and the suction means and to vent the suction means to atmosphere, whereby the said suction means is controlled to vary the position of the timer by the suction produced by the flow of air through the venturi at wide open throttle and by the suction of the mixing chamber for part open throttle.

5. In an internal combustion engine the combination of an ignition timer, a fuel mixture intake passageway including a venturi, two throttle valves spaced apart in series in said passageway one on each side of the venturi arranged to open and close in unison, suction controlled means for varying the position of the timer, and a passageway connecting the suction means with the venturi, a valve in said passageway, a connection between the valve and the throttle whereby when the throttle is in closed or idling position the valve closes the passageway between the suction means and the venturi and as the throttle is moved from idling toward open position the valve is opened to permit free communication through said passageway between the suction means and the venturi whereby when the throttle valves are partly open the suction means is subjected to manifold vacuum and when the valves are fully opened the suction means is subjected to the suction produced by the flow of air through the venturi.

6. In an internal combustion engine the combination of an ignition timer, a carburetor having a fuel and air mixing chamber with a fuel inlet into said chamber, two throttle valves spaced apart in series on opposite sides of the fuel inlet and arranged to open and close in unison, suction controlled means for varying the position of the timer, a passageway connecting the suction means with the mixing chamber between the said valves whereby the said suction means is controlled to vary the position of the timer by the suction

produced by the flow of air through the mixing chamber at wide open throttle and by the suction of the mixing chamber for part open throttle.

7. In an internal combustion engine the combination of an ignition timer, a carburetor having a fuel and air mixing chamber including a venturi with a fuel inlet into said venturi, two throttle valves spaced apart in series on opposite sides of the fuel inlet and arranged to open and close in unison, suction controlled means for varying the position of the timer, a passageway connecting the suction means with the venturi adjacent the fuel nozzle inlet whereby the said suction means is controlled to vary the position of the timer by the suction produced by the flow of air through the venturi at wide open throttle and by the suction of the mixing chamber for part open throttle.

MARION MALLORY.