Feb. 20, 1940. W. H. DANCE 2,190,863

ROAD SANDING MACHINE

Filed Oct. 1, 1936 2 Sheets-Sheet 1

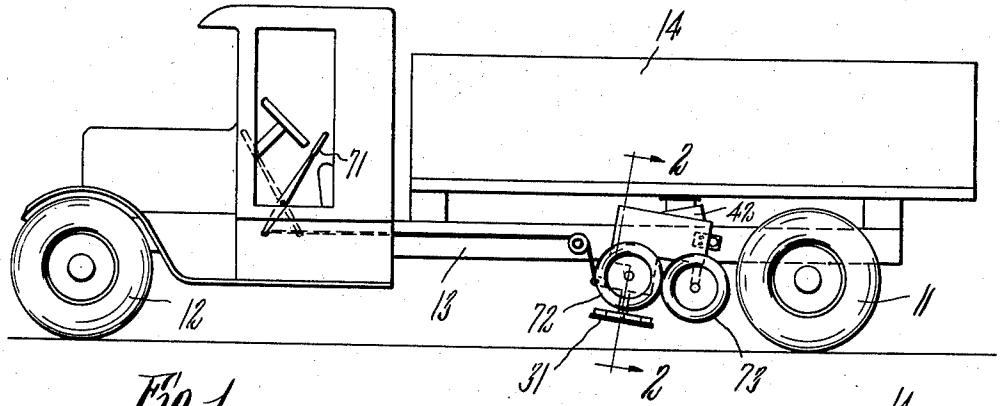

Fig. 1.

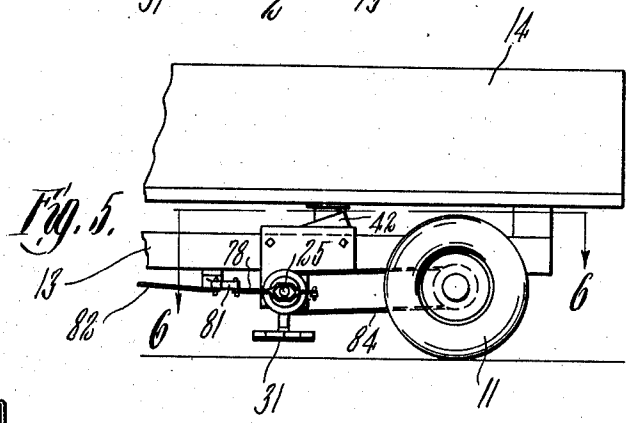

Fig. 5.

Fig. 2.

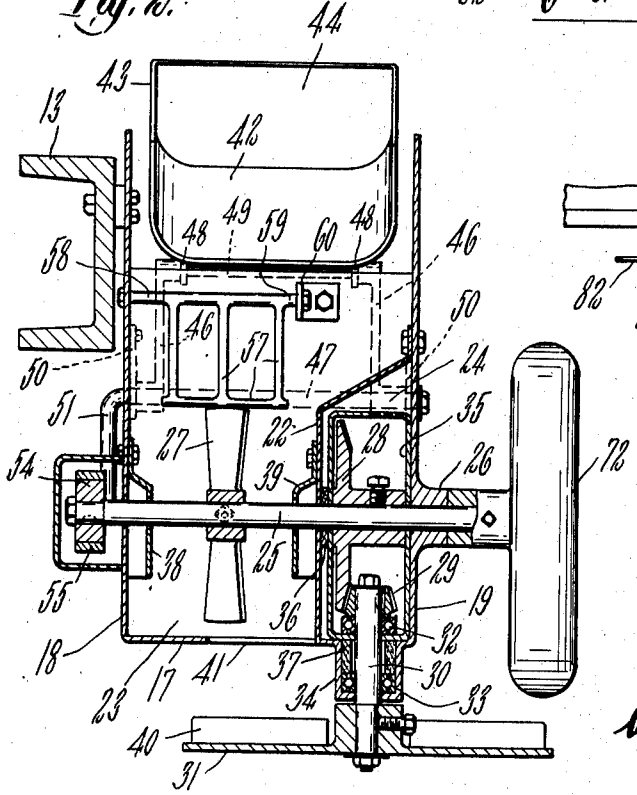

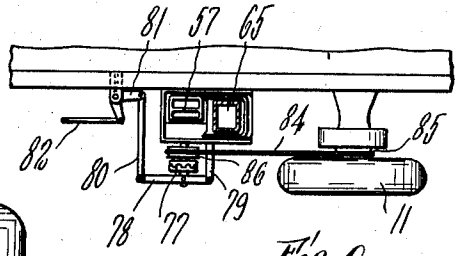

Fig. 6.

Inventor
William H. Dance
by Wright, Brown, Quinby & May
Attys.

Feb. 20, 1940. W. H. DANCE 2,190,863

ROAD SANDING MACHINE

Filed Oct. 1, 1936 2 Sheets-Sheet 2.

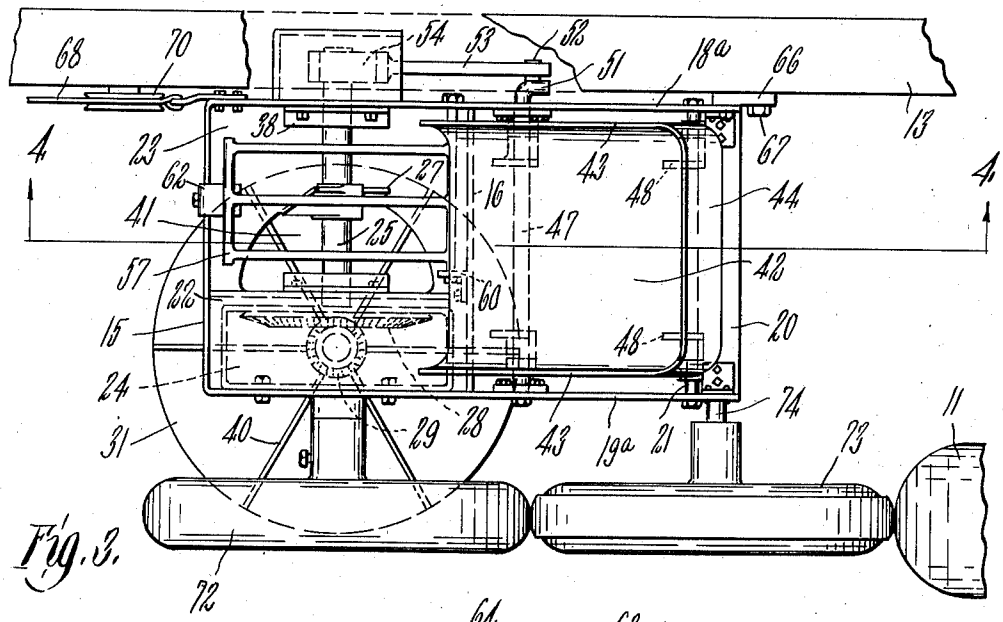

Fig. 3.

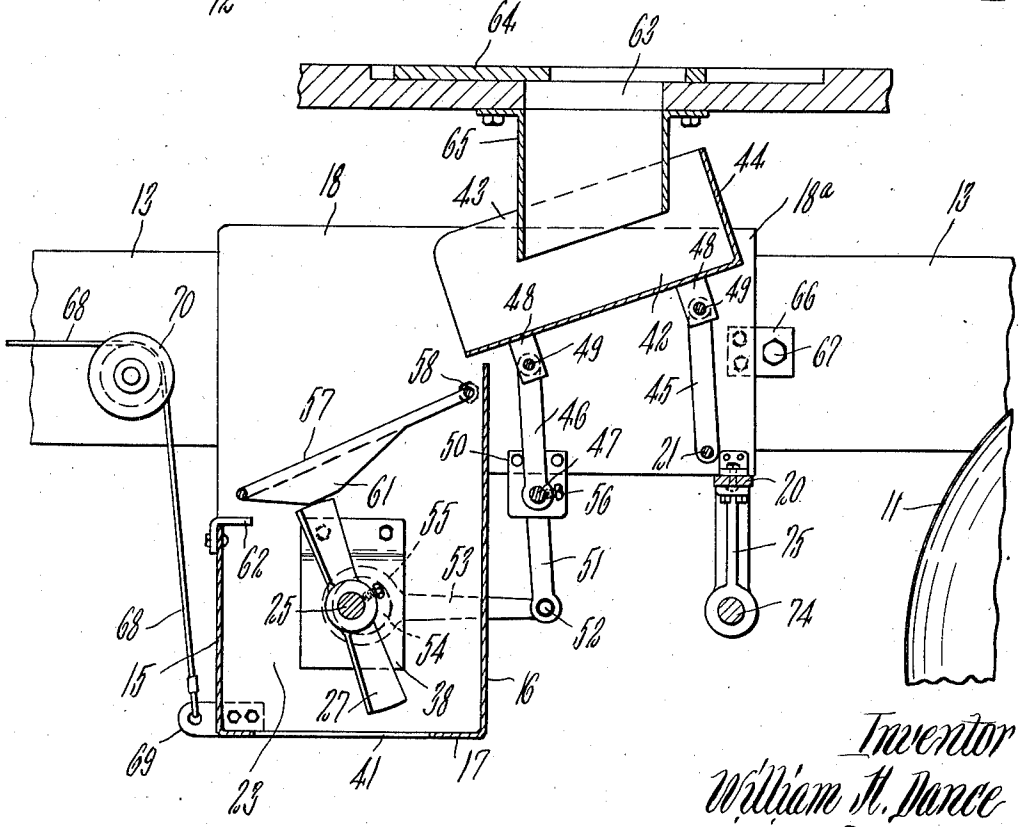

Fig. 4.

Inventor
William H. Dance
by Wright, Brown, Quinby & May
Attys.

Patented Feb. 20, 1940 2,190,863

UNITED STATES PATENT OFFICE

2,190,863

ROAD SANDING MACHINE

William H. Dance, Cambridge, Mass.

Application October 1, 1936, Serial No. 103,485

3 Claims. (Cl. 275—8)

This invention relates to equipment and apparatus for spreading sand on ice covered roads to prevent automobiles from skidding on the slippery surface; or for equivalently spreading other granular or subdivided material progressively over any ground surface where a dressing of this sort is required. One of its objects is to enable sand, etc. to be scattered from an automotive wheeled carrier of the material, such as an auto truck, in front of the driving wheels of the vehicle. This object is particularly important where trucks are used to spread grit on icy roads, as a measure to prevent skidding of the truck itself and enable it to progress at a uniform rate over upward and downward slopes of the road. While means for scattering sand have been used with trucks heretofore, such means have always been applied to the rear of the truck, so far as I am aware, and are therefore incapable of safeguarding the truck itself against skidding although preparing the road for safe travel by following cars.

A further object has been to provide a spreading equipment as an attachment adapted to be applied to and removed from trucks of standard character usable for general purposes, for converting such trucks at will into sanding machines organized to spread a substantially uniform coating or dressing of sand over a roadway in front of their own driving wheels.

These objects have been accomplished by the equipment described and claimed in the following specification and shown in the drawings, with two alternative forms of driving means for the spreading apparatus.

In the drawings—

Fig. 1 shows a side elevation of a typical motor truck equipped with sand delivering means embodying the invention;

Fig. 2 is a cross section of the sand spreading attachment shown in Fig. 1, represented as a section taken on line 2—2 of Fig. 1 and shown on a larger scale;

Fig. 3 is a plan view of the attachment shown in Fig. 2 and of a part of the means by which it is connected to the frame of the truck and the means for putting it into and out of operation;

Fig. 4 is a longitudinal section of the attachment taken on line 4—4 of Fig. 3;

Fig. 5 is an elevation of the rear part of a truck equipped with a sanding distributor embodying my invention with an alternative form of driving means for the moving parts;

Fig. 6 is a sectional plan view of the parts below the line 6—6 of Fig. 5.

Like reference characters designate the same parts wherever they occur in all the figures.

The truck shown in Fig. 1 typifies any standard motor truck, or equivalent automotive carrier having rear driving wheels 11, forward steering road wheels 12, a frame or chassis including longitudinal side bars 13, and a load carrying body 14. The distributor attachment which constitutes one phase of the invention is applied to one of the side bars of the chassis beneath the body and in front of the adjacent driving wheel. Two such attachments may be thus applied, one at each side of the truck. Another phase of the invention consists in the combination of such a truck or equivalent vehicle and a distributing attachment, or two such attachments, so applied.

The form of spreading attachment shown in these drawings consists of a box structure made of metal plates or sheets suitably secured together. I have not undertaken to show the details of connecting means between different plates, as these may be of conventional character generally known to fabricators of metal structures. It is sufficient to say that front and rear plates 15, 16, a bottom plate 17, and side plates 18 and 19 form the casing or fundamental structure. If desired, the parts which I have designated as the plates 15, 16 and 17 may be made of one continuous piece bent at right angles in suitable locations, or they may be separate pieces. And the structure may be strengthened and reinforced if desired by bars or straps at the corners and elsewhere. The side plates 18 and 19 have rear extensions 18a, 19a which are connected together and braced by a cross bar 20 adjacent to their lower rear corners. They are tied together by a rod 21 having nuts on its outer ends, as shown in Fig. 3, which rod has an additional function, as will presently appear.

The space enclosed between the plates 15, 16, 17, 18 and 19 is subdivided by a partition 22 into two compartments, namely, a main or larger compartment 23 and a smaller compartment 24, the latter being decked over by an inclined part of the partition. A transverse drive shaft 25 passes across both compartments through the outer walls and the partition thereof and is rotatable in suitable bearings therein, the bearing in the side plate 19 at the driving end of the shaft being reinforced by a boss 26. A stirrer 27 is secured to the shaft in the main compartment, and a driving bevel gear 28 is secured to the shaft in the smaller compartment.

Bevel gear 28 meshes with a bevel pinion 29

on a shaft 30 which passes through the bottom of the attachment and carries a spreader 31 on its lower end. Shaft 30 turns in ballbearings 32 and 33, the latter of which is set into a housing 34 which is offset from, or attached to, the bottom plate 17 close to the side plate 19. A housing 35 encloses the gears 28 and 29 and the bearing 32 to exclude from the latter any sand or dust which may work through the opening in partition 22 through which the shaft passes. A packing 36 surrounds the shaft between this partition and the adjacent wall of the housing, and there is another packing 37 in the housing 34 to exclude dust from the opening in housing 35 through which the shaft 30 passes. Shields 38 and 39 are attached to the plate 18 and partition 22 with an inward offset therefrom to divert the sand passing through the main compartment 23 from the shaft bearings in such plate and partition.

The spreader 31 is a circular disk having substantially radial vanes 40 projecting from its upper face. A portion of its area lies under an opening 41 in the bottom of the compartment 23 so that sand issuing through the opening falls on the spreader and is scattered by centrifugal force from the latter.

A chute 42 is located in the upper part of the space between the hear extensions 18*a*, 19*a* of the side plates. It has a bottom downwardly inclined from front to rear, side walls 43, and a rear wall 44. Its forward end extends a short distance across the upper end of plate 16 so as to guide sand delivered from the truck body to the compartment 23. It is open at the forward end and also at the top.

Chute 42 is supported at four points by two rear links 45, pivoted on the rod 21, and two forward links or lever arms 46 secured to a rock shaft 47. The chute has lugs 48 projecting from its bottom which are connected by pivots 49 with the respective links.

Rock shaft 47 is supported by bearing plates 50 secured to the plate extensions 18*a* and 19*a* respectively, and has on one end a downwardly projecting arm 51 which is coupled by a wrist pin 52 with a connecting rod 53. This connecting rod is coupled with an eccentric 54 on the drive shaft 25 by a bearing box or eccentric strap 55 of any usual or suitable character. As a convenient detail of construction, the rock shaft 47 and arm 51 may be made from a single integral rod of circular cross section, bent at right angles substantially as shown in Fig. 2; and the links or arms 46 may be formed with hubs surrounding the rock shaft and made fast by set screws 56.

An agitator 57 is pivoted above, or in the upper part of, the compartment 23 and beneath the outlet from the chute. It is preferably made as a grid having trunnions 58 and 59 rotatably supported in, respectively, the side plate 18 and a bracket 60 secured to the rear plate 16. A portion of the agitator overlies the stirrer 27 and is made with a web or lug 61 which intersects the orbit through which the outer ends of the stirrer blades revolve, so that such blades knock the agitator upwardly with each revolution. A stop 62 projects inward from the front plate 15 in a position to arrest down swing of the agitator when unsupported by the stirrer. The function of the agitator is to break up such lumps as are caused by adhesion of damp grains of sand to one another. The stirrer 27 also assists in breaking up lumps as well as in keeping the sand within the compartment 25 in such a free condition that it flows readily through the opening 41.

The machine thus described is put to use by being attached to the side bar 13 of the truck chassis beneath the lateral overhang of the body 14 and in front of the adjacent driving road wheel 11, and is driven by such wheel. An opening 63 (Fig. 4) is cut in the floor of the body above the location of the chute 44 and a sliding shutter 64 is provided to close such opening when discharge of sand is not desired. Preferably a spout 65 is secured to the under side of the body in register with the opening 63 and projecting into the upper part of chute 42 to guide into the latter all of the sand which issues from the opening.

Two alternative modes of mounting and driving the spreading attachment are shown here. In the arrangement of Figs. 1–4 inclusive the inner side plate 18 of the frame structure, or rather its rear extension 18*a*, carries a lug 66 which is bolted or riveted to the plate and is coupled to the side bar 13 by a pivot 67. This lug bears against the outer face of the side bar and is sufficiently wide and thick, while the pivot 67 is sufficiently large in diameter and provided with wide enough overlapping heads, to hold the attachment against tipping or canting and at the same time with capacity for movement angularly around the axis of pivot 67 in planes perpendicular to such axis. The forward end of the attachment is supported by a flexible tension member 68, such as a rope or chain, connected at one end to a lug 69 and passing over a guide wheel 70 to an operating lever 71 in the driver's cab. By manipulation of lever 71 the forward part of the apparatus may be raised and lowered to put the spreader into and out of action.

The driving transmission for this form of the invention comprises a disk or wheel 72 secured to the shaft 25 and an intermediate disk 73 on a pivot shaft 74 mounted rotatably in brackets 75 which are secured to and project downwardly from the cross bar 20. These disks are in the same plane with the median plane of the driving wheel 11, and are in continuous frictional peripheral engagement with one another. When the attachment is raised angularly to the position shown in Fig. 1, the intermediate or idle disk 73 is withdrawn from the driving wheel and the spreading apparatus is put out of action. The apparatus is put into action by lowering it until the disk 73 bears on the circumference of the driving wheel, as shown in Fig. 3.

The alternative driving arrangement shown in Figs. 5 and 6 consists of a belt or chain 84 passing around pulleys or sprockets 85 and 86 on the wheel of the truck and on the main shaft 25 of the spreader machine, respectively. In this case the spreading machine or attachment is secured immovably to the side bar of the truck frame, and is put into and out of action by a clutch 77, one member of which is splined to shaft 25 and the other is secured to pulley 76, which is loose on the shaft. A clutch shifter 78 is pivoted to a bracket 79 on the spreader machine and coupled with the operating lever 71 by a link 80, bell crank lever 81 and link 82.

It will be readily understood from the foregoing description that when the spreading machine is in action, the drive shaft 25 continuously rotates the stirrer 27, the spreader 31, and the eccentric 54. The eccentric imparts a short back and forth reciprocation to the chute 42,

preventing the sand from accumulating therein. The agitator 57 is struck and knocked upwardly at frequent intervals by the stirrer 27, and at each upward movement it strikes forcibly any agglomerated lumps of sand which may encounter any of its grid bars. The rapidity with which these parts are moved depends of course on the speed at which the vehicle travels over the road and the gear ratio of the transmission mechanisms. It is easily feasible thus to move the agitator several times per second when the truck is traveling at a speed in the order of ten miles per hour. The distance to which sand is scattered by the centrifugal spreader 31 is governed of course by the speed of the spreader, and the gearing which drives the latter is designed so as to spread the sand over a predetermined width of the roadway when the vehicle travels at the most effective speed for service on icy roads.

Conspicuous advantages follow from arranging the spreading attachment or machine in the position shown. Sand is spread on the road in front of the driving wheels of the truck so that the latter is safeguarded against skidding and a uniform rate of travel may be maintained; the attachment may be fitted and applied to standard trucks with minimum alterations and may be removed most easily; and the outlet through which the sand passes to the spreading machine is thus brought near the mid-length of the truck body, which makes it easier for a shovel man or gang of shovel men in the truck body to keep the outlet opening covered with sand. As previously stated, two such attachments may be applied as described to a truck, one at each side in front of each rear wheel in case it is desired to sand both sides of the road in one passage. But ordinarily it is sufficient to provide one attachment only at the left side of the truck.

The foregoing description of a particular construction and purpose is not intended, nor is it to be construed, as limiting the utility and scope of the invention to anything less than the full range of equivalents and analogous uses commensurate with the novelty and importance of the invention.

What I claim and desire to secure by Letters Patent is:

1. The combination with a motor truck having a frame including longitudinal side frame bars, a body supported on said side bars overhanging them laterally, and propelling road wheels, of a distributing attachment secured to one of said side bars in front of the adjacent propelling wheel and beneath the lateral overhang of the body; said attachment comprising walls forming a receiving compartment with an outlet in its bottom, a centrifugal spreader beneath said opening in position to catch material falling therefrom, a chute located beneath the overhanging body open at its upper side and having a discharge end projecting over said receiving compartment, the overhanging body having an opening in its bottom directly above the open upper side of said chute, spreader-rotating means, chute-reciprocating means, and connections by which said propelling wheel, in rotating, drives said means.

2. A spreading machine adapted for attachment to a vehicle having a body, comprising side plates and transverse plates forming a compartment, a movable chute disposed in an inclined position between the side plates with provision for substantially horizontal back and forth movement and in a location such that it is adapted to discharge material into said compartment, a shaft mounted rotatably in the side plates and extending across the compartment, a centrifugal spreader rotatably mounted in position to receive material issuing from said compartment through an opening in one of the bounding walls thereof, and transmission mechanisms through which said shaft rotates said spreader and imparts back and forth substantially horizontal movement to the chute.

3. A spreading machine for attachment to a load-carrying vehicle, comprising side plates and transverse plates forming a compartment, a chute arranged in an inclined position between the side plates open to receive material from above and having an open end arranged to discharge material into the compartment, a shaft mounted rotatably in two of the plates which enclose the compartment, a centrifugal spreader rotatably mounted in a position to receive material issuing from the compartment through an opening in one of the bounding walls thereof, means by which said shaft rotates said spreader, a grid pivotally mounted over the compartment and beneath the chute outlet, and a stirrer secured to the shaft, said stirrer having blades and the grid having a portion extending downward across a portion of the orbit of said blades whereby it is struck and knocked upwardly by the blades in the course of their rotation.

WILLIAM H. DANCE.