Nov. 1, 1927. 1,647,881

J. OLSEN

CUTTER ATTACHMENT FOR PAPER TAPE MACHINES

Filed Feb. 3, 1925

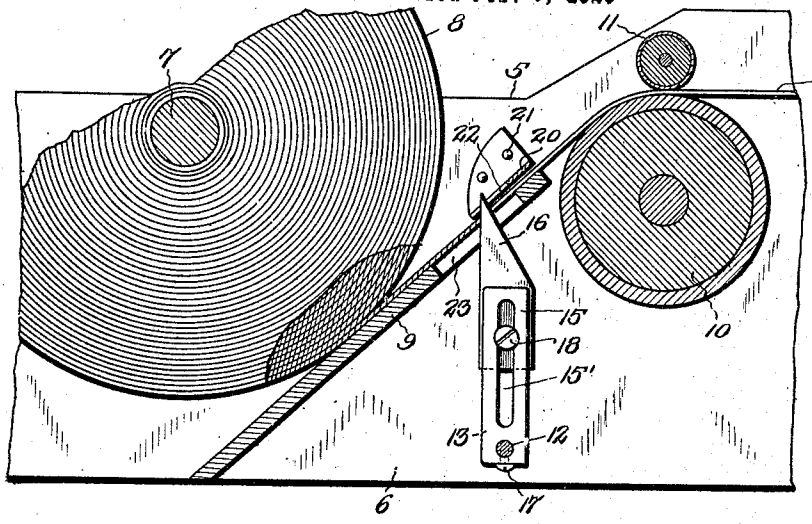

Fig. 1.

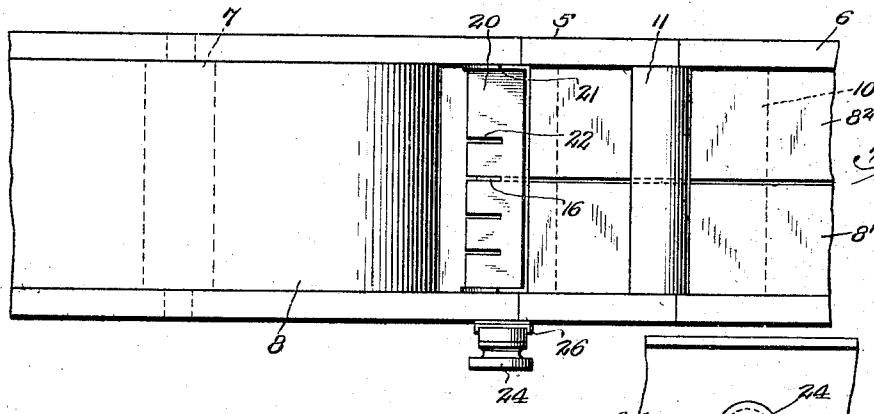

Fig. 2.

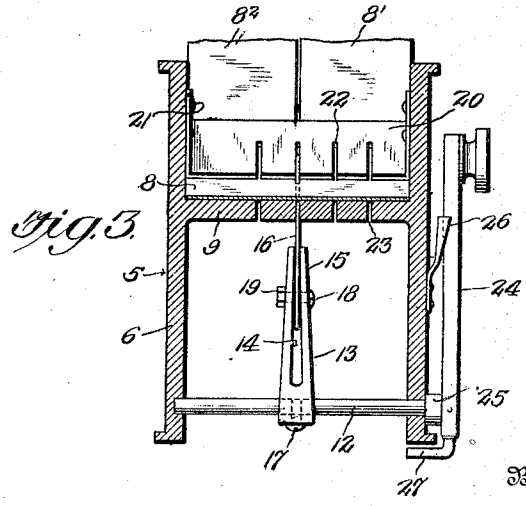

Fig. 3.

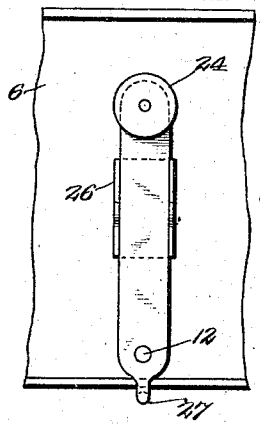

Fig. 4.

Inventor

Joseph Olsen,

By Bernard S. Garvey

Attorney

Patented Nov. 1, 1927. 1,647,881

UNITED STATES PATENT OFFICE.

JOSEPH OLSEN, OF LOS ANGELES, CALIFORNIA.

CUTTER ATTACHMENT FOR PAPER-TAPE MACHINES.

Application filed February 3, 1925. Serial No. 6,628.

The present invention consists of a cutter attachment which is especially adapted for application to paper tape machines to incise the tape longitudinally as it leaves its feed roller preparatory to impinging against the moistening rollers.

One of the principal objects of this invention is to provide a cutter capable of installation on standard paper tape holders and moisteners without appreciably increasing the cost of manufacture of the latter and without interfering with the normal use of the holder and moistener or otherwise impairing their efficiency.

A co-ordinate object of the invention is to provide a cutter which may be moved at will into an operative or inoperative position without the use of any instruments and without the necessity of removing or adjusting any part of the tape machine.

Other objects of the invention will be apparent from the following description of the present preferred form of the invention taken in connection with the accompanying drawings, wherein:—

Fig. 1 is a fragmentary longitudinal sectional view of a tape holder and moistener of standard design illustrating the application of my improved invention thereon;

Fig. 2 is a top plan view of the same;

Fig. 3 is a transverse sectional view of a tape holder and moistener embodying my invention, the latter being shown in elevation; and

Fig. 4 is a fragmentary side elevational view of the tape holding frame showing the manner of mounting the operating handle of the present invention thereon.

In the drawings, in order to illustrate the application of this invention a portion of a tape holder and moistener, generally designated 5, is provided, which is of standard construction and consists of a frame 6 in which a feed or supply roller 7 is revolubly mounted having tape 8 wound thereon in a manner well known in the art. The free end of the tape is movable across an inclined guide 9 and passes between a pair of guide rollers consisting of a moistening roller 10 and presser roller 11, respectively, both of which are revolubly mounted in the frame. The free end of the tape is severed at any desired point and is especially adapted for use in securing the open ends of packages, etc.

The present invention embodies a shaft 12 rotatably mounted in the frame 6, in proximity to the lower marginal edges of the latter. This shaft is adapted to receive one or more cutting elements for use in longitudinally incising the tape. In the present instance, in order to illustrate the application of the invention, a single cutting element is shown which consists of a holder 13 the base of which is provided with a transverse opening through which the shaft 12 extends. The holder is longitudinally slit, as indicated at 14, to provide a pair of yieldable gripping jaws 15 between which a blade 16 is interposed. The holder 13 may be held in a predetermined position on the shaft 12 through the medium of a screw 17 which is detachably mounted in the base of the holder and projects into engagement with the shaft 12 as illustrated to advantage in Fig. 3. The jaws 15 have longitudinal slots 15′ formed therein which receive the shank of a bolt 18 the latter being carried by the blade 16. The bolt has a nut 19 threaded thereon which may be urged into engagement with one of the jaws 15 for contracting the jaws into snug engagement with the blade 16. By providing the slots 15′ it will be apparent that the blade 16 is capable of a longitudinal adjustment so as to vary the position of the blade with respect to the tape 8 in a manner hereinafter more fully set forth. Moreover, the blade may be adjusted angularly, with respect to the holder 13, if so desired.

In order to eliminate the possibility of any appreciable lateral play of the blade 16 during use of the latter, a restraining plate 20 is provided. This plate is substantially U-shape and has the ends thereof fixedly secured to the inner faces of the frame 6, as indicated at 21. One of the marginal edges of the plate has a series of slots 22 formed therein any one of which is adapted to receive the blade 16, or, if a plurality of cutters are used, the blade of each cutter will be mounted in its respective slot in the restraining plate. As shown in Fig. 3 the inclined guide 9 of the frame is provided with slots 23 which correspond to the slots 22 of the plate 20 in order to permit the blade 16 to extend through the guide and into one of the slots 22. The plate 20 is disposed at an inclination complementing the angle of inclination of the guide 9 and has its lower face spaced from the upper face of said guide in order to provide ample space for the tape 8 to travel in in being drawn from

the said roller 7 over the moistening roller 10.

One end of the shaft 12 extends appreciably beyond one side of the frame 6 and has a handle 24 fixedly mounted thereon which is spaced from the frame by a washer 25. Movement of the handle 24 correspondingly imparts movement to the shaft 12 thereby controlling the position of the cutting blade 16. When the cutter is in an operative position, as shown in Figs. 1 and 3 of the drawings, the handle 24 is locked from movement by a clip 26 which is carried by the frame 6. Furthermore, the extent of movement of the handle 24 is limited by an abutment 27 formed by extending the lower end of the handle 14 and bending the same at right angles to lie beneath the frame 6. In this way the handle is always readily accessible to the user of the tape holder and will not gravitate into a position below the frame 6.

In use of this device, when it is desired to incise the tape 8, the cutter is positioned substantially as shown in Figs. 1 and 3 of the drawings, in which position the blade 16 is mounted in one of the slots 22 of the restraining plate 20. By pulling the tape through the rollers 10 and 11 in the usual manner the tape is longitudinally incised thereby providing two strips designated $8'$ and 8^2. When it is desired to use the full width of the tape the cutter is disengaged by movement of the handle 24 in an apparent manner.

It is, of course, apparent that this device is susceptible of a variety of uses but the one herein described is designed to illustrate the principle of the invention and one of the preferred uses thereof. Moreover, various changes may be made in the device, especially in the details of construction, proportion and arrangement of parts within the scope of the claims hereto appended.

What is claimed is:—

1. In a paper tape machine, a frame, feed and guide rollers journalled therein and relatively spaced apart, a tape guide extending between the feed and guide rollers and inclined in the direction of the guide rollers, said guide being slotted, a shaft journaled in the frame crosswise of the guide and below the slotted portion thereof, a holder fixed on the shaft and extending inwardly of the frame, a cutter carried by the holder and penetrating the slot of the guide for longitudinally incising the tape, a plate mounted in the frame above the slotted portion of the guide and disposed at an inclination complementing the angle of inclination of the guide with its lower face spaced above the upper face of the guide, said plate being slotted to receive the upper end of the cutter, a handle on the shaft extending in the general direction of the said holder, said handle and said holder normally tending to gravitate into a position below the frame, means for confining the gravitational movement within narrow limits, and means engageable with the said handle when the latter has reached a predetermined point between the established limits of its gravitational movement to hold the cutter in operative relation with respect to the said slotted plate.

2. In a paper tape machine, a frame, a feed roller mounted therein, guide rollers in advance of the feed roller, an inclined guide between the said feed roller and the said guide rollers, said inclined guide having a longitudinal slot, a shaft revolubly mounted between the lower marginal edges of the frame and directly under the slot of the said guide, a holder fixed on the said shaft and extending upwardly therefrom in the direction of the said slot, a blade penetrating the said slot and positioned in the said holder for longitudinally incising the tape, a handle for rocking the shaft to vary the position of the blade relative to the slot, and means engageable with the said handle to hold the same against movement when the blade is in position for incising the tape.

3. In a paper tape machine, an inclined guide having a slot, means for guiding the tape over the said inclined guide, a rocker shaft below the slot of the guide, a cutter between the said shaft and said guide, said cutter being fixed on the shaft at its lower end and having its cutting edge penetrating the said slot and positioned for longitudinally incising the tape, a handle for rocking the shaft to vary the position of the cutter relative to the slot, said handle normally tending to gravitate into a position below the shaft, means engageable with the said handle to hold the same against gravitational movement when the cutter is in position for incising the tape, and means for limiting the extent of gravitational movement of the handle to prevent the latter from gravitating into a position below the shaft when not engaged with the said holding means.

4. In a paper tape machine, a frame having a guide across which the tape is adapted to be moved, said guide having a slot, a rocker shaft below the guide, a holder fixed on said shaft, a blade mounted in said holder for longitudinally incising the tape and being longitudinally and angularly adjustable with respect to the holder, a handle for rocking the shaft to vary the position of the blade with respect to the slot of the guide, and means engageable with the handle when the said blade is operatively positioned in the slot to hold the same against movement.

5. In a paper tape machine, a frame having a longitudinally inclined guide across the upper surface of which the tape is adapted to be moved, said guide being pro-

vided near its elevated end with a series of transversely spaced longitudinal slots, a rocker shaft journaled crosswise of the frame directly under the slots of the guide and having one end extended beyond the side of the frame, a cutter fixed on said shaft for longitudinally incising the tape, said cutter being aligned with one of the said slots of the guide, a handle fixedly mounted on the extended end of the shaft for rocking the same to move the cutter lengthwise of the slot, means fastened to the frame above the said shaft for engaging and locking the handle against movement when the cutter is in a predetermined position, and abutment means carried by the handle for engaging the frame below the shaft to shorten the arc traversed by the handle when disengaged from the locking means.

6. In a paper tape machine, a cutter attachment including a rocker shaft, a holder fixedly mounted thereon and presenting a longitudinally slotted portion, and a cutter seated in the said slotted portion of the holder and adjustably secured thereto.

7. In a paper tape machine, a cutting attachment including a rocker shaft, a handle for rocking the shaft, a blade, a holder fixedly mounted upon the said shaft and presenting yieldable gripping jaws between which the said blade is interposed, and means for adjustably securing the said blade to the said jaws.

8. In a paper tape machine, a cutting attachment including a rocker shaft, a handle for rocking the shaft, a holder mounted on the said shaft and adjustable longitudinally thereof, and a blade carried by the said holder and having adjustment longitudinally and angularly with respect to the holder.

In testimony whereof I affix my signature.

JOSEPH OLSEN.