Feb. 15, 1938. L. LINK 2,108,496

GUMMED TAPE DISPENSING MACHINE

Filed April 16, 1936

Fig. 2.

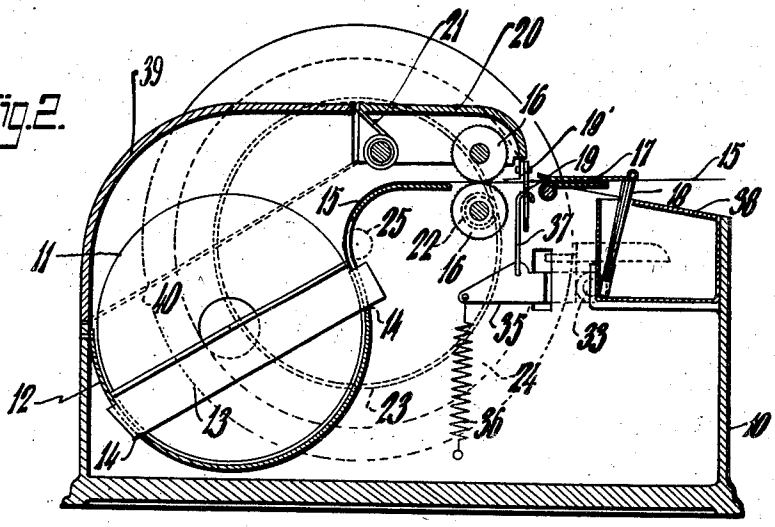

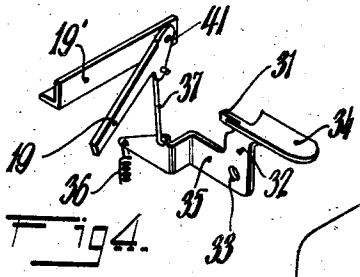

Fig. 4.

Fig. 3.

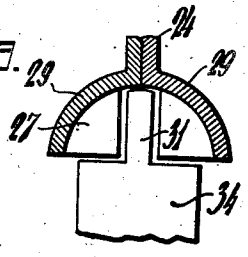

Fig. 1.

INVENTOR
Louis Link
BY
Brown & Jones
ATTORNEYS

Patented Feb. 15, 1938

2,108,496

UNITED STATES PATENT OFFICE

2,108,496

GUMMED TAPE DISPENSING MACHINE

Louis Link, New York, N. Y.

Application April 16, 1936, Serial No. 74,628

10 Claims. (Cl. 271—2.4)

This invention relates to a feed mechanism and more specifically to a feed mechanism which operates intermittently upon the material fed.

In general, it is an object of the invention to provide a device of the character described, which will efficiently perform the purposes for which it is intended, which is simple and economical of construction, which can be expeditiously, conveniently and safely manipulated, and which can be readily manufactured and assembled.

Another object of the invention is to provide a strip-feeding machine which cuts off differing, predetermined lengths of strip with relative accuracy; to provide such a machine wherein the momentum of the moving parts does not interfere with said accuracy; to provide such a machine, manually operated, wherein the operative's finger, when it stops, immediately acts as a stop for the feeding part of the machine; to provide such a machine with cam surfaces positioned so that, when it is intended that the feeding part of the machine shall stop, the operator's motivating finger, although acting as a stop, will not be pinched; and to provide such a machine wherein a stopping abutment is generally in the path of the manually-operated parts but does not interfere directly with their motion.

Other objects of the invention will in part be obvious and will in part appear hereinafter.

The invention accordingly comprises the features of construction, combination of elements, and arrangement of parts, which will be exemplified in the construction hereinafter set forth and the scope of the application of which will be indicated in the claims.

For a fuller understanding of the nature and objects of the invention, reference should be had to the following detailed description taken in connection with the accompanying drawing, in which:

Fig. 1 is a perspective view of a machine embodying one form of the invention;

Fig. 2 is a view in elevation, partly in cross-section of the machine shown in Fig. 1 and taken from the left of Fig. 1 with the side of the casting removed;

Fig. 3 is a view of a detail of the machine shown in Fig. 1 and taken along the lines 3—3; and

Fig. 4 is a perspective view of a portion of the mechanism shown in Fig. 2.

Tape-serving devices have been made heretofore wherein the motion of a wheel through a predetermined arc advanced the material, to be dispensed or treated, a predetermined amount. There was, among other drawbacks in those earlier machines, the difficulty that there was no assurance that the arc turned through by the wheel would be that arc predetermined as correct to advance the material by the desired amount. The momentum of the various moving parts differed from operation to operation with the attack of the operator and with other conditions. Hence different quantities of material were treated, before the momentum was overcome in each case, and the feeding parts were at rest.

The present invention overcomes, among others, the above-mentioned ineptitudes.

In the drawing, 10 denotes a casing in which there is material, i. e., a narrow roll 11 of paper, glued on one side, to be dispensed and/or treated. The roll may be positioned as desired. As shown, it lies in the hollow of a metal element 12, which latter is attached to the casing. Guards 13 may lie, generally parallel, across element 12 and be supported in chosen apertures 14 in the element, the choice depending upon the width of the roll 11. The material is drawn from the roll in a strip 15, passes between a pair of rollers 16, which may be serrated, past a knife bar 19', between a weighting element 17 and a moistening element 18, such as an inverted brush. Various sections of the strip 15 are cut off at the bar 19' by a knife 19 in a manner to be described.

One of the rollers 16 is an idler carried by movable cap 20, which cap may be a part of the casing and which is activated by spring 21 to hold the said one roller against the other. A gear 22 on the end of the fixed roller 16 engages an interior gear 23 on a rotatable element 24 which may be generally termed wheel-like and which is journaled on to the casing as at 25. A rotation of the wheel 24 causes an advancement of the strip 15.

Associated with the wheel 24 and preferably with the circumference thereof, are a plurality of members adapted to assist in the motivation of wheel 24. These may be in the form of manually-engageable, circumferentially spaced, radially extending members 26. As shown, they each have a radially extending surface 27 and a surface 28 at an angle to the radius to said surface 28. They may lie in a trough 29 in the rim of the wheel 24. They are each provided with an opening 30 extending therethrough, with one dimension perpendicular to the radius, parallel to the openings in the others, and in the form of a notch from the outermost tip thereof. Surfaces 27 may be formed to fit a finger and each surface 28

may extend from the inner edge of one surface 27 to the outer edge of the next surface 27.

An abutment element 31 is permanently fixed in the plane of the openings 30 and extends radially nearer the axis of the wheel than outermost portions of the members 26. It is attached to an arm 32 as shown in Fig. 4. It is in the path of that part of an operator's hand which engages a surface 27 of the wheel 24. As viewed from the right in Fig. 1, wheel 24 is movable counter-clockwise. Abutment 31, in its position of rest, is radial to the axis of wheel 24 and its surface may be in the plane of a surface 27 of a member 26 into the slot 30 of which the abutment extends. The abutment preferably does not move counter-clockwise with reference to the axis of wheel 24.

A finger may be placed on surface 27 of any element 26 and the wheel 24 rotated until the finger is stopped by element 31. The amount of strip 15 thus moved forward depends upon the distance between the surface 27 chosen and the abutment 31. The distance between members 26 may be predetermined to give a certain advance to the strip 15, e. g., one inch. Indices may be marked along a part of the casing 10, adjacent the rim of the wheel 24, to point out to the operator the amount of strip advance when the finger is inserted on the corresponding member 26 and moved to the abutment 31.

Means are provided for cutting strip 15 at knife bar 19' after the wheel 24 and the strip have come to a stop. Such means may be independent of abutment 31. It is preferred that such means be so arranged that the finger which has been stopped by abutment 31 may next, and from the stop position, operate the cutting mechanism. Thus lever 34 may also be fixed to arm 32 and may be rotated, with that arm, counter-clockwise, as viewed from the right in Fig. 1, about pivot 33 in the casing. Another arm, 35, fixed to arm 32, extends through the casing 10 and against the force of spring 36 and by means of link 37, lifts the cutting knife 19 when lever 34 is moved counter-clockwise.

The moistening element 18 may be a brush supported in, and reaching out of, a container 38 for liquid.

A portion 39 of the back, end, top and a side wall may be hinged as a unit at 40 so that access may be had to the interior of the casing 10.

The operation of the device is as follows: A finger is placed upon one of the surfaces 27 and moved toward abutment 31. Wheel 24 is moved thereby as are also gears 23, 22, roller 16 and strip 15. When the finger meets abutment 31, it comes to a stop and in all operations it always comes to a stop at the same place. In that position, link 37 may be radially in line with the pivot 41 of the knife 19, or a stop may be provided to give the same effect. Any momentum in the finger is delivered to the abutment and not to the wheel 24, which therefore comes to an immediate stop, assuming there is a normal amount of rotational friction in the mounting of the wheel. Any momentum which the wheel might have and which would not be immediately overcome by the said friction, is overcome by the surface 28 which begins to and immediately does act as a cam against the end of the finger. The latter may be started to be shoved radially outward by this action, and thus it is not caught by a succeeding flat member coming down onto the finger nail. The finger is next pulled away from wheel 24 while it is at the same time pushed down so as to rock the bell crank 32, 35 and thereby operate the knife 19.

Since certain changes may be made in carrying out the above method without departing from the scope of the invention, it is intended that all matter contained in the above description shall be interpreted as illustrative and not in a limiting sense.

It is also to be understood that the following claims are intended to cover all of the generic and specific features of the invention herein described, and all statements of the scope of the invention which, as a matter of language, might be said to fall therebetween.

Having described my invention, what I claim as new and useful and desire to secure by Letters Patent, is:

1. In a device of the character described, the combination comprising feeding means, operative mechanism for said feeding means comprising a rotatable means, a plurality of manually-engageable, spaced members thereon and substantially fixed means in the path of that part of a hand which is in engagement with one of said members, and in motion with said rotatable means, each of said members in part surrounding said fixed means as said each member passes said fixed means.

2. In a device of the character described, the combination comprising feeding means, operative mechanism for said feeding means comprising movable means having a manually-engageable portion thereof, substantially fixed means in the path of a part of a hand which engages said portion and moves with said movable means, said part being, to a substantial extent, surrounded by other parts of the hand which are in contact with said manually-engageable portion, and stopping means associated with said movable means, said stopping means including a surface which is movable in a direction which, at a predetermined position of said stopping means, is not perpendicular to the plane of said surface, said stopping means being associated with said movable means in a position such that a further motion of said movable means, after the said part of the motivating hand has become fixed against said fixed means, brings said surface of said stopping means substantially immediately against the fixed hand.

3. In a device of the character described, the combination comprising feeding means, operative mechanism for said feeding means comprising a rotatable means, a plurality of manually-engageable, spaced members thereon and substantially fixed means in the path of that part of a hand which is in engagement with one of said members and in motion with said rotatable means, said members having a cam surface whereby when a finger is held against said fixed means a succeeding member, as said rotatable means continues under momentum, jambs said surface against the finger, but does not pinch the finger.

4. In a device of the character described, the combination comprising feeding means, operative mechanism for said feeding means comprising a rotatable means, a plurality of manually-engageable, spaced members thereon and substantially fixed means in the path of that part of a hand which is in engagement with one of its members and in motion with said rotatable means, said members having a surface adapted to fit a finger, said members having a cam surface whereby when a finger is held against said fixed means a succeeding member, as said rotatable

means continues under momentum, jambs said surface against the finger but does not pinch the finger.

5. A strip feeding machine comprising a casing, strip feeding means therein, operating mechanism for said feeding means including a manually-rotatable wheel having circumferentially spaced members engageable by the hand of the operator, a measuring scale adjacent the path of movement of said members, and abutment means arranged in the path of movement of said members and acting in conjunction with said scale and said wheel members to predetermine the lengths of strip fed from the machine, said members having apertures therein in registry with said abutment means whereby the hand of the operator is stopped when it reaches said abutment means but said abutment means does not directly interfere with the motion of said wheel.

6. A strip feeding machine comprising a casing, strip feeding means therein, operating mechanism for said feeding means including a manually-rotatable wheel having circumferentially spaced members engageable by the hand of the operator, a measuring scale adjacent the path of movement of said members, and abutment means arranged adjacent the path of movement of said members and acting in conjunction with said scale and said wheel members to predetermine the lengths of strip fed from the machine, said members extending radially and having an opening therein extending through them along the arc of a circle about the axis of said wheel and said abutment means being substantially fixed on a portion of said arc.

7. A strip feeding machine comprising a casing, strip feeding means therein, operating mechanism for said feeding means including a manually-rotatable wheel having circumferentially spaced members engageable by the hand of the operator, and abutment means arranged in the path of movement of said members and acting in conjunction with said wheel members to predetermine the lengths of strip fed from the machine, said members having apertures therein in registry with said abutment means whereby the hand of the operator is stopped when it reaches said abutment means but said abutment means does not directly interfere with the motion of said wheel.

8. In a device of the character described, the combination comprising feeding means, operative mechanism for said feeding means comprising movable means having a manually-engageable portion thereof, whereby a moving hand may engage and move said movable means, means adapted for stopping the hand, which is moving said movable means, at a predetermined position, and means for preventing a farther momental motion beyond said predetermined position, of that part of the hand engaging said movable means.

9. In a device of the character described, the combination comprising feeding means, operative mechanism for said feeding means comprising movable means having a manually-engageable portion thereof, whereby a moving hand may engage and move said movable means, means adapted for stopping the hand, which is moving said movable means, at a predetermined position, and means adapted for preventing a farther momental motion beyond said predetermined position, of that part of the hand engaging said movable means, the last-mentioned means extending into said movable means.

10. In a device of the character described, the combination comprising feeding means, operative mechanism for said feeding means comprising movable means having a digitally-engageable portion thereof, whereby a moving hand may engage and move said movable means, means adapted for stopping the hand, which is moving said movable means, at a predetermined position, and means adapted for preventing a farther momental motion, beyond said predetermined position, of that part of the digit engaging said movable means.

LOUIS LINK.