Aug. 26, 1958 J. I. HALL 2,849,214

BOREHOLE DRILLING APPARATUS FOR PREVENTING LOST CIRCULATION

Filed Sept. 2, 1954

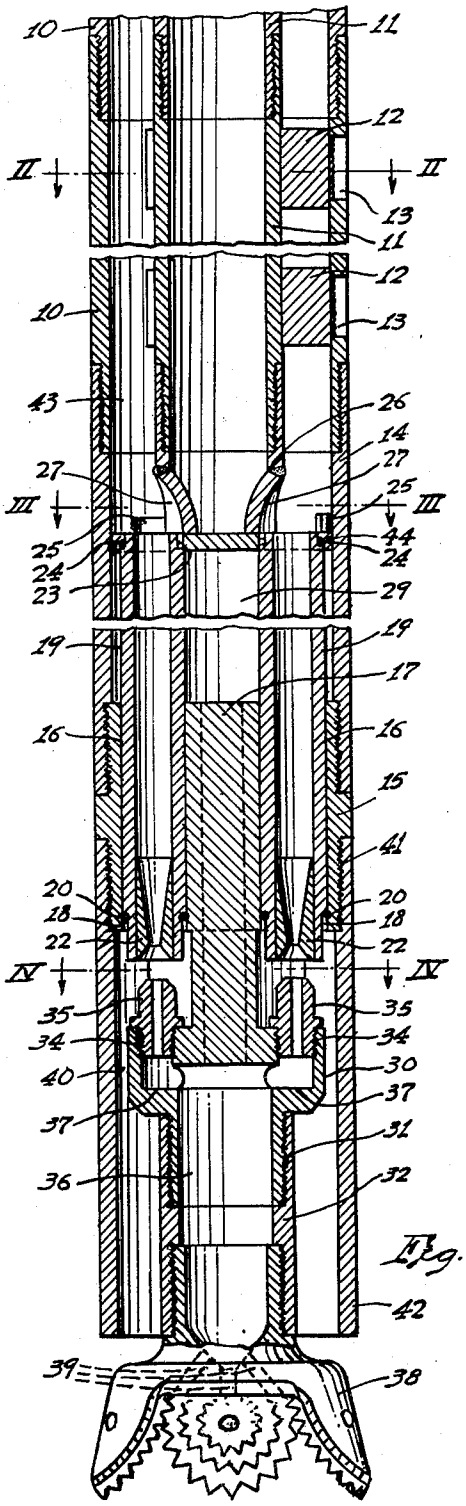


Fig. 1.

Fig. 2.

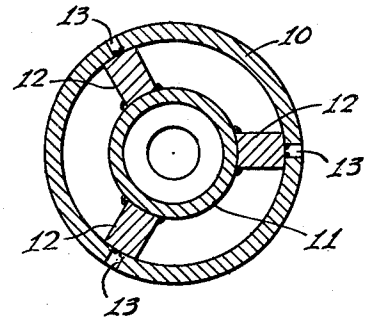


Fig. 3.

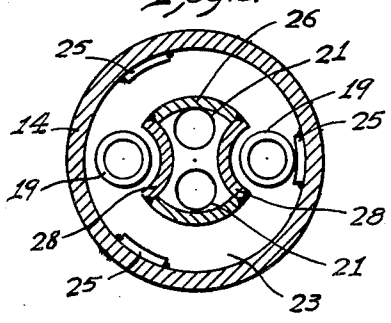


Fig. 4.

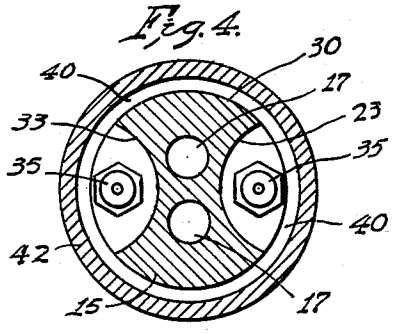


INVENTOR.
John I. Hall.
BY
Howard Cook
ATTORNEY.

United States Patent Office 2,849,214 Patented Aug. 26, 1958



2,849,214

# BOREHOLE DRILLING APPARATUS FOR PREVENTING LOST CIRCULATION

John I. Hall, Lourenco Marques, Mozambique, Portuguese East Africa, assignor to Gulf Research & Development Company, Pittsburgh, Pa., a corporation of Delaware

Application September 2, 1954, Serial No. 453,899

4 Claims. (Cl. 255—24)

This invention relates to improvements in drilling apparatus, the invention having more particular reference to the rotary drilling of boreholes of moderate depth in cavernous and fissured formations wherein excessive loss of drilling fluid is ordinarily encountered.

It is the practice in rotary drilling to insert casing after a hole of particular size has reached desired depth, following which drilling proceeds with a smaller bit run through the casing then in place. In shot holes, such as seismic prospecting shot holes which are of moderate depth, casing may not be needed, or if it is, it is inserted after the hole has been completed. In either case large areas of the formation are exposed as the bit progresses downwardly. If the hole penetrates a cavernous formation lost circulation of drilling fluid may, and frequently does result since in conventional practice the fluid is pumped down the drill column and returns to the surface in contact with the exposed formation.

In accordance with this invention, the drilling fluid is isolated from the wall of the hole except in the immediate vicinity of the bit so that loss of fluid into the formation is minimized. To this end the drill pipe comprising the column is of multi-duct construction having separate water ways for fluid pumped into the hole and for its return to the surface with the chips removed in cutting. A part of the pumped fluid is jetted into the bottom of the hole to clean the bit and stir up chips by turbulence and agitation, while its greater part is diverted to upwardly-directed nozzles in the drill pipe above the bit. These nozzles are in alignment with and directed toward venturi tubes communicating with the return ducts in the drill pipe, whereby suction created by the increased velocity of the fluid at the venturi orifices assists in drawing the cuttings by jetting action into the return flow and their consequent removal from the hole with the circulated fluid.

It is an object of my invention to minimize lost circulation by isolating the flow of drilling fluid both into and out of the drilled hole so that it comes only briefly into contact with the exposed formation in the immediate vicinity of the bit.

Another object of the invention is to produce a cleanly-drilled hole from which cuttings are flushed as they are formed, by creating a turbulent flow of drilling fluid around the bit and in a region of suction which is induced by jetting a part of the fluid through venturi tubes in return ducts within the drill pipe.

A further object of the invention is to provide a drill column comprising concentric, spaced pipes which are assembled as a unit to afford rigidity to the column and thus to facilitate the drilling of a straight hole.

Other objects and advantages of this invention will be apparent from the following description and drawings in which:

Figure 1 is a longitudinal sectional view of the drill column;

Figure 2 is a cross-sectional view taken along line II—II of Figure 1, as viewed in the direction of the arrows;

Figure 3 is a cross-sectional view taken along line III—III of Figure 1 as viewed in the direction of the arrows; and

Figure 4 is a cross-sectional view taken along line IV—IV of Figure 1 as viewed in the direction of the arrows.

Referring more particularly to the drawings, the drill column comprises outer and inner pipes **10** and **11** which are secured together in concentric, spaced relation. The outer pipe may conveniently comprise sections of 3½ inch O. D. casing while the inner pipe may comprise A. P. I. standard type "B" drill pipe which is 1²⁹⁄₃₂ inch O. D. Bridging pieces **12** better shown in Figure 2, three or more in number, are arranged as shown in Figure 2 to space the pipes **10** and **11**, and where the pipes are of the above-exemplified sizes, such bridging pieces may be made of parallel key stock. The bridging pieces **12** are welded to the inner pipe before its assembly within the outer pipe and are thereafter welded to the outer pipe through slots **13** previously milled in the wall of the pipe **10** for this purpose as shown in Figure 3, after the threads of both male and female ends of the pipe sections have been matched by their starting threads. For the latter purpose previously-made male and female jigs are applied to each end of the pipes **10** and **11** in order to properly match the threads so that when additional lengths of the double-pipe column are screwed together the threaded joints of both the inner and outer pipes make up tightly in unison. The assembled sections of pipes **10** and **11** are thus available to extend the drill column as the drill penetrates the ground.

At the upper end of the drill column there is screwed onto the column a standard square kelly (not shown) which is driven by a rotary table in conventional manner, and by means of which the drill column and drill are rotated. The kelly also has welded inside it an inner pipe so as to match the upper end of the drill column. By the use of a double swivel at the top of the composite kelly, drilling fluid may be pumped down the inner pipe **11** to the drill and the drilling fluid returns to the surface through the annular space **43** between the pipes **10** and **11**.

Screwed to the lower end of the composite drill pipe there is a special outer pipe sub **14** having female threads at each end as shown in Figure 1. Screwed to the lower end of sub **14** is a venturi tube holder **15**, the latter being drilled with two pairs of holes **16** and **17**. Holes **16** have at their lower end a shoulder **18** which serves to retain venturi tubes **19**. The tubes **19** fit into the holes **16** and have at their lower end a reduced diameter to form a shoulder which rests on shoulder **18**. The tubes are provided with O-ring seals **20** where they are supported on the shoulders **18**. The other pair of holes **17** are water-course holes and are located on a line at right angles to the transverse line of holes **16**, and may be located under the holes **21** shown in Figure 3 to be described later.

The venturi tubes **19** are each provided at their lower end with a venturi orifice or throat **22** which may be pressed into the tube or otherwise securely fastened therein. The venturi tubes themselves must be long enough to impart an upward velocity to the returning drilling fluid and a length of about 3 feet has been found satisfactory. The upper end of each venturi tube abuts against a shouldered opening in transverse plate **23** whose top surface is seen in Figure 3. O-ring seals **24** (Figure 1) may be used to seal the end of tubes **19** against plate **23**. The plate **23** may freely rotate inside of outer sub **14** and abuts on its upper surface against three or more stops **25** which are welded to the inside surface of sub **14**. The

lower edges of stops **25** lie in a transverse plane properly distanced from the lower end of sub **14** so that in assembly the tubes **19** are placed in their holder **15** and the plate **23** placed on top of the tubes **19**, after which the holder **15** and sub **14** are screwed together and the plate comes tightly up against the stops **25**, whereby the venturi tubes are securely held in position. O-ring **44** seals plate **23** against sub **14**.

Referring now to that portion of Figure 1 extending between the sections II—II and III—III, the lower end of inner pipe **11** screws into a piece of pipe **26** which at its lower end is welded onto the top of plate **23**. The lower end of pipe **26** also has cut out two diametrically-opposed sections **27** which are closed by pieces of suitably-curved metal plates **28** which are welded to the pipe **26** and to the plate **23** to cover the sections **27**. The recesses thus formed in the regions **27** permit the upward-flowing fluid from the venturi tubes **19** to clear the lower end of pipe **26**. Two holes **21** are drilled through the plate **23** inside the region defined by the pipe **26** and the plates **28**, the holes **21** thus carrying downward-flowing fluid into the space **29**, whence the fluid enters the water-course holes **17** previously mentioned.

The lower end of the venturi holder **15** is reduced in diameter to a diameter substantially smaller than the root diameter of threads **41**, the smaller diameter being indicated by **30** (as best shown in Figure 4) and this is further reduced and threaded at **31** for the drill-bit sub **32** as shown in Figure 1. The venturi holder **15** thus functions as the bit holder and serves to transmit torque from the drill pipe to the drill bit. Two diametrically opposite recesses **33** are milled in the region of reduced diameter **30** as best shown in Figure 4. These recesses expose the holes **16**, and the lower end of the venturi tubes **19** with the venturi throats **22** protrude into the recesses. Directly below and in line with the holes **16** there are drilled and tapped the holes **34**. Upwardly-directed nozzles **35** are screwed into these holes prior to assembly of the venturi tubes **19**, the length of the nozzles **35** being less than the length of the recesses **33**. The nozzles may be provided with hexagonal wrench flats as shown so that they may be tightened in the holes **34**. The lower end of the venturi holder is drilled out as shown at **36**, the bore **36** being sufficiently large in diameter so that it communicates with the water-course holes **17**. Transverse holes **37** are then drilled to intersect both the holes **34** and the bore **36** and thereby provide communication from the bore **36** to the nozzles **35**. The transverse holes **37** may be drilled from outside and the outer end afterward closed with a plug (not shown) welded in place in well-known manner.

The bit sub **32** carries at its lower end a conventional drill bit **38** having passageways **39** which carry drilling fluid from the bore **36** directly to the bit where it may be discharged as a jet into the bottom of the borehole as is conventional in the art. Any known type of drill bit may be used, the drill bit per se not being my invention. While a cone bit is shown in Figure 1 my invention may use a fish-tail bit or other known type.

The venturi holder **15** is threaded as at **41** and a shield **42** screwed thereon. The shield **42** extends downward around the recesses **33** and terminates a short distance above the upper part of the drill bit **38**. The inside diameter of the shield **42** is substantially larger than the diameter **30**, thus providing an annular space **40** through which the upward-flowing drilling fluid returning from the bit **38** may find ready access to the lower end of the venturi tubes. The shield **42** should be the same outside diameter or larger than the outer drill pipe **10** and should be smaller than the outside diameter of the drill bit **38**.

In drilling with my invention, the assembly of Figure 1 is rotated and drilling fluid is concurrently pumped down the inner pipe **11**. The fluid is carried by pipe **26** and holes **21** into the space **29**, whence it flows through holes **17** into the bore **36** and some of it flows directly to the borehole through passageways **39**. In its downward flow, a substantial part of the drilling fluid is diverted into lateral passages **37** which branch from the bore **36**, and these branch passages terminate in the upwardly-directed nozzles **35** which are in alignment with the venturi throats **22** in tubes **19**. The shield **42** which forms a downward extension of the outer drill pipe **10** surrounds the jets so that fluid circulated through the drill bit comes into only brief contact with the exposed formation being drilled. Drilling fluid filling the bottom of the borehole and the space within the shield **42** is in turbulent flow thus serving to agitate and suspend the drill cuttings. The upwardly-directed jets emerging from the nozzles **35** are accelerated in their flow through the venturi throats **22** and create a suction which draws the fluid from the bottom of the borehole upwardly through the venturi tubes **19** and discharges it into the annular return flow passage **43** between the inner and outer drill pipes. At the surface the cuttings may be separated from the drilling fluid and the latter recirculated as is conventional in the art.

By the use of my invention the formation being drilled is exposed to drilling fluid for only a short distance above the bit. The region of the borehole above the shield **42** is protected from the drilling fluid so that there is substantially no interchange of fluid between previously-drilled formations higher up in the borehole and the circulating-fluid system of the drill.

The pressure of the fluid in the borehole surrounding the bit may be adjusted somewhat by the size of orifices in the nozzles **35** and the venturi throats **22**, as compared with the passageways **39** in the bit. Thus the suction created by the venturi tubes may be made great enough so that a pressure slightly less than hydrostatic prevails in the borehole around the bit, or slightly greater than hydrostatic. I prefer to so adjust the nozzles and flow passages that the pressure in the region around the bit is approximately equal to the hydrostatic pressure. In this manner there is little or no tendency for fluid to enter a formation being drilled and which might cause lost circulation, and also little or no tendency for formation water to enter the borehole at the drill. Alternatively, I have found it useful in certain areas to so adjust the size of the nozzles as to operate with pressure somewhat less than hydrostatic in the borehole at the bit, since by so doing there is a tendency to withdraw a slight amount of water from formations being drilled so as to make up for drilling fluid normally lost in the pits at the surface or left behind when the drill is moved from one location to a new one. Either of these pressure conditions avoid loss of circulating fluid, which is a very important desideratum in many instances, e. g. when drilling seismograph shot holes in arid regions.

It is to be understood that my invention is not limited in its application to the drilling of shot holes or other boreholes of shallow to moderate depth. It will be apparent that the unitary assemblage of concentric pipe contributes greatly to the rigidity of the drill column and affords separate ducts which isolate the circulated fluid from the formation penetrated by the hole, so that as a consequence straight and clean hole may be drilled with minimum lost circulation. My invention may be operated with aqueous drilling fluids or with other conventional liquid-type drilling fluids such as well known oil or emulsion muds, and it may be operated with air as the drilling fluid. Furthermore, the construction of my drill is such that in many cases standardized parts may be used in the assembly.

In the appended claims the element **15** is termed bit holder inasmuch as it functions to transmit drilling torque and weight to the drill bit as well as forming a convenient mount for the nozzles and venturi tubes.

What I claim as my invention is:

1. Rotary drilling apparatus wherein a drill pipe carries at its lower end a bit holder with drill bit attached thereto comprising a drill pipe providing a fluid-supply

passage and an associated fluid-return passage, a bit holder rigidly connected to said drill pipe, a fluid-flow channel from said fluid-supply passage through said bit holder adapted to supply fluid to the drill bit, an upwardly-directed nozzle in said bit holder, a fluid-flow channel from said fluid-supply channel to said nozzle, a venturi tube in said bit holder spaced above said nozzle and axially aligned with said nozzle, a fluid-flow channel affording fluid communication from the borehole immediately above the drill bit to the lower end of said venturi tube, and a fluid-flow channel from the upper end of said venturi tube to said fluid-return passage.

2. Rotary drilling apparatus wherein a drill pipe carries at its lower end a bit holder with drill bit attached thereto comprising a drill pipe having a fluid-supply duct and an associated fluid-return duct, a bit holder rigidly connected to said drill pipe, a fluid-flow channel from said fluid-supply duct through said bit holder adapted to supply fluid to the drill bit, an upwardly-directed nozzle in said bit holder, a fluid-flow channel from said fluid-supply duct to said nozzle, a venturi tube in said bit holder spaced above said nozzle and axially aligned with said nozzle, a fluid-flow channel affording fluid communication from the borehole immediately above the drill bit to the lower end of said venturi tube, and a fluid-flow channel from the upper end of said venturi tube to said fluid-return duct.

3. Rotary drilling apparatus wherein a drill pipe carries at its lower end a bit holder with drill bit attached thereto comprising a drill pipe having a fluid-supply duct and a concentric fluid-return duct rigidly connected thereto, a bit holder rigidly connected to the drill pipe and having an outside diameter substantially the same as the outside diameter of the drill bit to be used, a fluid-flow channel from said fluid-supply duct through said bit holder adapted to supply fluid to the drill bit, an upwardly-directed nozzle in said bit holder, a fluid-flow channel from said fluid-supply duct to said nozzle, a venturi tube in said bit holder spaced above said nozzle and axially aligned with said nozzle, a fluid-flow channel affording fluid communication from the borehole region between the drill bit and the bit holder to the lower end of said venturi tube, and a fluid-flow channel from the upper end of said venturi tube to said fluid-return duct.



4. Rotary drilling apparatus wherein a drill pipe carries at its lower end a bit holder with drill bit attached thereto comprising a drill pipe having a fluid-supply duct and an associated fluid-return duct, a bit holder rigidly connected to the drill pipe, a fluid-flow channel leading from said fluid-supply duct through said bit holder adapted to supply fluid to the drill bit, an upwardly-directed nozzle in said bit holder, a fluid-flow channel from said fluid-supply duct to said nozzle, a venturi tube in said bit holder spaced above said nozzle and axially aligned with said nozzle, an annular shield connected to the bit holder and extending downward from the bit holder to the proximity of the drill bit, a fluid-flow channel affording fluid communication from the borehole region between the drill bit and the lower end of said shield to the lower end of said venturi tube, and a fluid-flow channel from the upper end of said venturi tube to said fluid-return duct.

**References Cited** in the file of this patent

UNITED STATES PATENTS

| | | |
|---|---|---|
| 682,939 | Ivens | Sept. 17, 1901 |
| 1,547,461 | Steele | July 28, 1925 |
| 2,234,454 | Richter | Mar. 11, 1941 |
| 2,329,330 | Brailey | Sept. 14, 1943 |
| 2,544,623 | Weiler | Mar. 6, 1951 |
| 2,634,101 | Sloan | Apr. 7, 1953 |