E. C. COOKE.

SHIELD AND DAMPER FOR FIRE-PLACE GRATES.

No. 194,074. Patented Aug. 14, 1877.

Fig. 1.

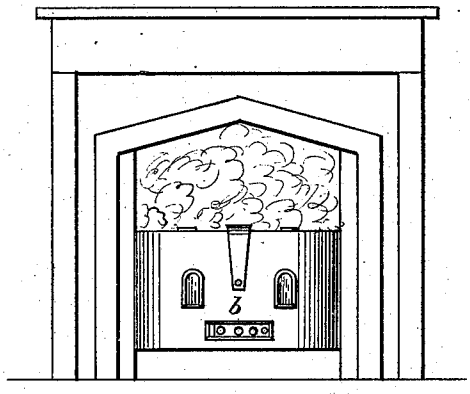

Fig. 2.

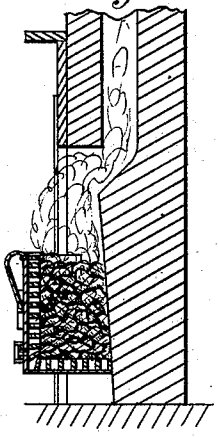

Fig. 3.

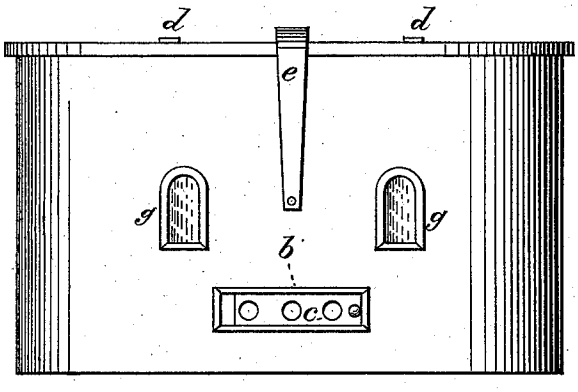

Fig. 4.

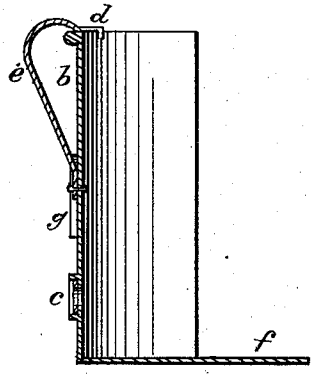

Fig. 5.

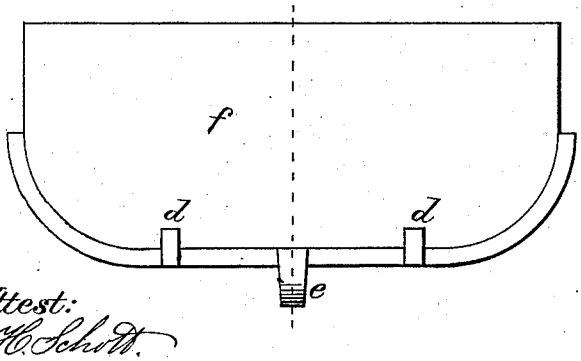

Attest:
F. H. Schott.
W. C. Chandlee

Inventor:
Ella C. Cooke

N. PETERS, PHOTO-LITHOGRAPHER, WASHINGTON, D. C.

UNITED STATES PATENT OFFICE.

ELLA C. COOKE, OF WASHINGTON, DISTRICT OF COLUMBIA.

IMPROVEMENT IN SHIELD AND DAMPER FOR FIRE-PLACE GRATES.

Specification forming part of Letters Patent No. **194,074**, dated August 14, 1877; application filed November 28, 1876.

To all whom it may concern:

Be it known that I, ELLA CRAIGHEAD COOKE, of the city of Washington, District of Columbia, have invented certain new and useful Improvements in a Shield and Damper for Grates; and I do hereby declare that the following is a full, clear, and exact description thereof, which will enable others skilled in the art to which it appertains to make and use the same, reference being had to the accompanying drawings, and to letters of reference marked thereon, which form a part of this specification.

My invention relates to the construction of a blower for an open fire-place having a grate therein, in such a manner that when in position upon the grate the energy of combustion of the fuel therein may be regulated at will, so that in moderately cool weather the process shall be very slow without ceasing, and also in such a manner as to save labor in keeping it going and the fire-place clean.

My said improvements will be hereinafter more fully described with reference to the accompanying drawings, in which—

Figure 1 represents a fire-place with my improved blower upon the grate; Fig. 2, a cross vertical section of the same; Fig. 3, a front view of the blower detached; Fig. 4, a cross-section, and Fig. 5 a plan view, of the same.

The front plate of the blower is provided with hooks *d d*, by which it hangs upon the top bar of the grate with the handle *e*, with openings *g g* for plates of mica, through which the burning fuel may be seen, and with the damper *b*, which may be hinged to it, or may slide in ways or grooves provided for it, in order to close, or partially close, the draft-holes *c* in the front plate. *f* is a flange, apron, or shield extending from the bottom edge of the front plate to the back of the fire-place, and fitting to the sides of the same laterally, so that when the draft-holes *c* are closed by the damper *b* the fire-place is closed and almost air-tight, except above the grate, and the result of such closing up is, that fuel would scarcely burn at all, but its burning can be increased at will by opening, partially or wholly, the draft-holes *c* by the use of the damper.

This construction secures another result, which is the confinement of the dust and ashes within the fire-place, so that the fire-place does not require so much attention to keep it clean as it would without this shield, and, moreover, without it the combustion could not be so perfectly controlled.

With the use of my improvement a grate full of coal can be made to burn very slowly and gradually for—say, twenty-four hours, which is a result greatly to be desired late in the spring and early in the autumn.

The device may obviously be made in one piece, or the front plate and the bottom plate *f* may be made separately, and then fastened together in any suitable manner.

I have tested my improvement for a sufficiently long time to enable me to speak with confidence of its success in accomplishing my design in making the invention.

What I claim as my invention, and desire to secure by Letters Patent, is—

The device composed of the front plate provided with the damper *b* and the bottom plate *f*, constructed substantially as shown and described, for the purpose set forth.

In testimony that I claim the foregoing as my own I hereunto affix my signature in presence of two witnesses.

ELLA C. COOKE.

Witnesses:

SIMON JOSEPH,

A. W. WILLIAMSON.