# United States Patent [19]

**Thompson**

[11] **3,929,135**

[45] **Dec. 30, 1975**


[54] **ABSORPTIVE STRUCTURE HAVING TAPERED CAPILLARIES**


[75] Inventor: **Hugh Ansley Thompson,** Fairfield, Ohio

[73] Assignee: **The Procter & Gamble Company,** Cincinnati, Ohio



[22] Filed: **Dec. 20, 1974**

[21] Appl. No.: **535,003**

[52] **U.S. Cl.** ..... **128/287;** 128/156; 128/296

[51] **Int. Cl.**[2] ..... **A41B 13/02**

[58] **Field of Search** ..... 128/287, 286, 156, 296, 128/284; 161/109, 112



[56] **References Cited**

UNITED STATES PATENTS

| | | | |
|---|---|---|---|
| 2,923,298 | 2/1960 | Dockstader et al. | 128/296 |
| 3,221,738 | 12/1965 | Ekberg et al. | 128/287 |
| 3,292,619 | 12/1966 | Egler | 128/156 |
| 3,399,672 | 9/1968 | Crowe, Jr. et al. | 128/156 |
| 3,814,101 | 6/1974 | Kozak | 128/287 |

FOREIGN PATENTS OR APPLICATIONS

| | | | |
|---|---|---|---|
| 2,406,525 | 2/1973 | Germany | 128/287 |



*Primary Examiner*—Richard A. Gaudet
*Assistant Examiner*—J. Yasko
*Attorney, Agent, or Firm*—Monte D. Witte; Fredrick H. Braun; John V. Gorman



[57] **ABSTRACT**

Absorptive devices, such as disposable diapers, presenting a dry surface feel to the user. The surface feel is obtained when the topsheet is a liquid impervious material provided with tapered capillaries of critical diameters and tapers, each capillary having a base in the plane of the topsheet and an apex remote from the plane of the topsheet, and when each apex is in intimate contact with an absorbent pad.


**8 Claims, 4 Drawing Figures**

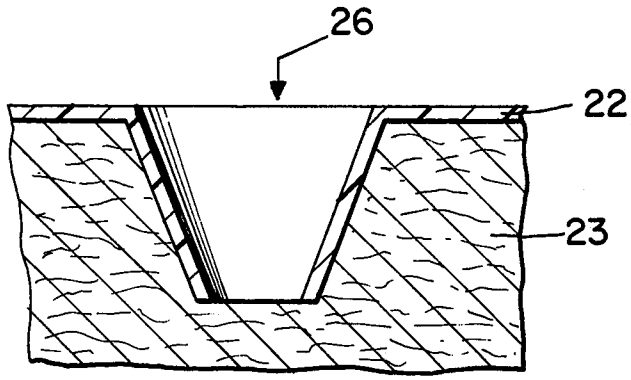

Fig. 1

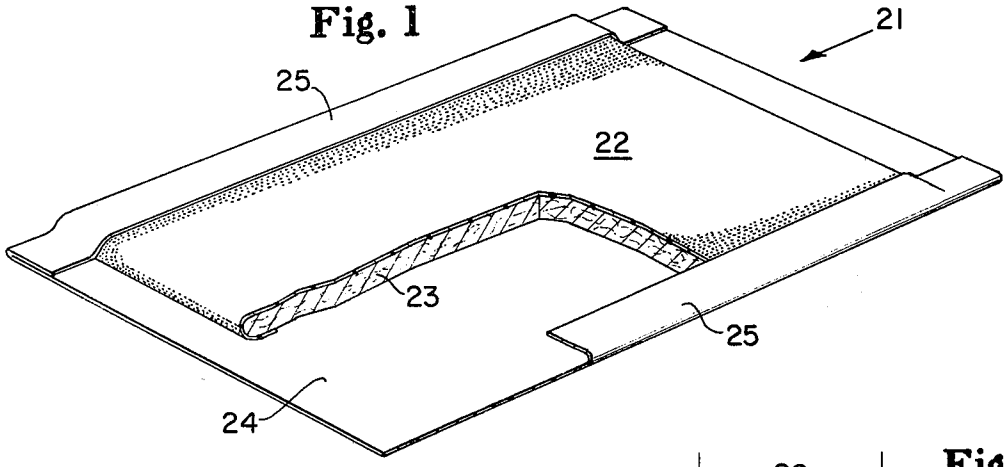


Fig. 3

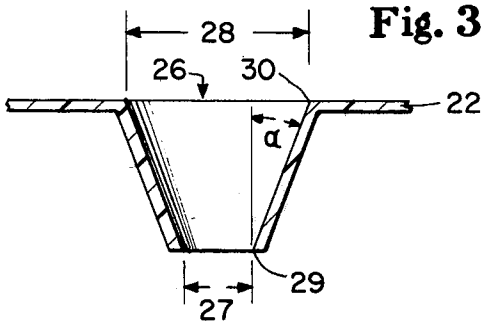


Fig. 2

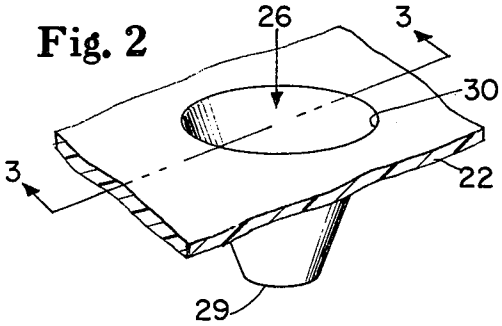


Fig. 4

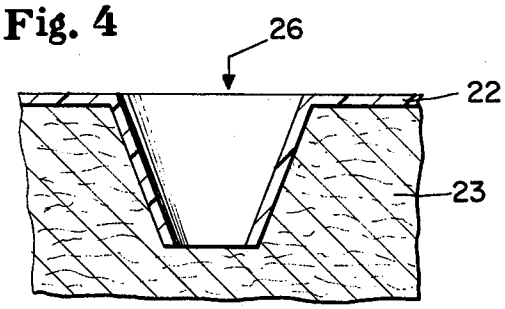

# ABSORPTIVE STRUCTURE HAVING TAPERED CAPILLARIES

## BACKGROUND OF THE INVENTION

1. Field of the Invention

This invention relates to topsheets for absorptive devices such as diapers, sanitary napkins, bed pads, incontinent pads, towels, bandages and the like, and, more particularly, to absorptive structures which freely allow fluid to pass into the interior of an absorptive device but which inhibit the reverse flow of fluid. A topsheet is the portion of an absorptive device which covers one face of the absorbent element of an absorptive device and which in some applications contacts the skin of the person using the absorptive device.

2. Description Of The Prior Art

Absorptive devices are articles of manufacture designed to receive and retain fluid discharges from the body within an absorbent element of the absorptive device. Absorptive devices such as diapers, sanitary napkins, catamenial tampons, bed pads, incontinent pads, towels, bandages and the like are well known articles of commerce. In recent times, single use disposable absorptive devices have significantly replaced permanent absorptive devices which are designed to be laundered and reused. While the improved absorptive structure of this invention can be used with reusable absorptive devices, it finds great utility when used with disposable absorptive devices and will be discussed in that context.

Disposable absorptive devices comprising an absorbent pad covered with a topsheet which contacts the body are well known. Covering the outer portion of the absorptive device with a fluid-impermeable backsheet to prevent absorbed fluids from leaking out of the absorptive device and soiling clothing, bed clothes, etc. is equally well known. The absorbent pad component of disposable absorptive devices can comprise well known materials such as creped cellulose wadding, airlaid felt or the like. The liquid impermeable backsheet can comprise any of various materials well known in the art such as polyethylene film.

One of the principle disadvantages of conventional absorptive devices is the maceration of the skin caused by prolonged contact with absorbed fluids. One especially common manifestation of this maceration is diaper rash generally occurring about the base of the trunk of infants. In order to minimize the effect of prolonged liquid contact with the skin, absorptive devices such as diapers have been produced with the body contacting topsheet thereof designed to exhibit a greater or lesser degree of surface dryness. For example, U.S. Pat. No. 3,327,625 issued to Johnson on Mar. 1, 1966, teaches that any hydrophobic material in the crotch area of the diaper will cause moisture to wick away from the skin of an infant wearer and thereby provide a substantially dry surface in contact with the infant's skin. U.S. Pat. No. Re. 26,151 issued to Duncan et al. on Jan. 31, 1967, teaches the use of porous, hydrophobic, non-woven fabrics as topsheets. U.S. Pat. No. 2,916,037 issued to Hansen on Dec. 8, 1959, is a further example of the use of a non-woven topsheet.

U.S. Pat. No. 3,814,101 issued to Kozak on June 4, 1974, attacks the problem of a wet topsheet in a manner slightly different from the use of hydrophobic non-woven materials. Kozak suggests a topsheet of a non-fibrous hydrophobic film which is provided with a plurality of valvular slits which restrict the reverse flow of liquid from the absorbent element of the device.



Sisson, in Belgian Patent 811,067, Aug. 16, 1974, which claims priority from U.S. patent application Ser. No. 333,110, Feb. 16, 1973, describes a breathable, liquid impervious backsheet containing apertured bosses. The apertures therein, so as to maintain the liquid impervious character of the backsheet, are smaller in diameter than the capillaries hereinafter described.

## SUMMARY OF THE INVENTION

This invention concerns an absorptive structure for absorptive devices such as diapers, sanitary napkins, catamenial tampons, bed pads, incontinent pads, bandages and the like. The absorptive structure of this invention comprises a fluid-impervious topsheet material provided with tapered capillaries or orifices of critical opening dimensions and of critical angles of taper, each of which has a base in the plane of the topsheet and an apex remote from the plane of the topsheet, and the apex of which is in intimate contact with an absorbent element. The critical angle of taper is from about 10° to about 60°; base opening dimension is from about 0.006 to about 0.250 inch; apex opening dimension is from about 0.004 to about 0.100 inch.

The topsheet of this invention is an improvement over prior art topsheets in that it allows the free transfer of fluids from the body into the absorbent element of the device while inhibiting the reverse flow of these fluids thereby providing a relatively much dryer surface in contact with the user than has been previously obtainable. While directed primarily to single use, disposable absorptive devices such as disposable diapers, the absorptive structure of this invention can be used with reusable absorptive devices such as cloth diapers.

Accordingly, it is an object of this invention to provide an absorptive structure for absorptive devices which permits the free transfer of fluids from the body into the absorbent element of the absorptive device while effectively inhibiting the reverse flow of fluids from the absorbent element.

It is a further object of this invention to provide a topsheet for absorptive devices which presents to the user thereof a dryer surface than has been previously obtainable.

It is a further object of this invention to provide a topsheet for absorptive devices which is comfortable when in contact with the skin of the user.

It is a still further object of this invention to provide a disposable diaper which presents a surface to the wearer thereof which is dryer than has been previously obtainable.

## BRIEF DESCRIPTION OF THE DRAWINGS

While the specification concludes with claims particularly pointing out and distinctly claiming the subject matter of the present invention, it is believed that the invention can be more readily understood from the following description taken in connection with the accompanying drawings, in which:

FIG. **1** is a perspective representation of an unfolded disposable diaper with portions of its components cut away.

FIG. **2** is an enlarged fragmentary perspective view of a tapered capillary as used in this invention.

FIG. **3** is a cross-section in elevation of a tapered capillary taken along the line **3—3** in FIG. **2**.

FIG. 4 is the cross-section of a tapered capillary as shown in FIG. 3, but here shown in initmate contact with an absorbent element.

## DETAILED DESCRIPTION OF THE PREFERRED EMBODIMENT

The discussion that follows is primarily directed to the use of the invention as a unique absorptive structure embodied in a disposable diaper. While this is contemplated as being a preferred use of the absorptive structure, it should be understood that it also has substantial utility in a wide variety of absorptive devices, both disposable and reusable, such as sanitary napkins, catamenial tampons, bed pads, incontinent pads, towels, bandages and the like. The detailed description of the absorptive structure and its use in a disposable diaper will allow one skilled in the art to readily adapt this invention to other devices.

FIG. **1** is a perspective view of a disposable diaper in an unfolded condition. Various layers have been cut away to more clearly show the structural details of this embodiment. The disposable diaper is referred to generally by the reference numeral **21.** The novel topsheet of this invention is shown at **22.** The other two major components of the disposable diaper **21** are the absorbent element or pad **23** and the backsheet **24.** In general, the side flaps **25** of the backsheet **24** are folded so as to cover the edges of the absorbent pad **23** and topsheet **22.** Topsheet **22** is generally folded to completely enclose the ends of absorbent pad **23.** The drawing of diaper **21** in FIG. **1** is a simplified representation of a disposable diaper. A more detailed description of a preferred embodiment of a disposable diaper is contained in the aforementioned U.S. Pat. No. Re. 26,151 which is herein incorporated by reference.

The topsheet **22** of this invention is constructed from a liquid impervious material. An example of a suitable liquid impervious material is low density polyethylene of from 0.001 to 0.002 inch (0.0025 to 0.0051 centimeter) thickness. The topsheet **22** is provided with tapered capillaries as hereinafter described.

Tapered capillaries **26** are shown in perspective in FIG. **2** and in cross-section in FIG. **3.** While tapered capillary **26** is shown in FIGS. **2** and **3** as generally in the form of a frustrum of a conical surface, it is to be understood that any generally tapered structure, such as a frustrum of a pyramid or the like with a triangular, square, or polygonal base, is within the contemplation of the invention; circular tapered capillaries, however, are used in this description for convenience in explaining the manifold advantages of the invention. It is also to be understood that the tapered capillaries can be asymmetric (i.e., the angle of taper on one side can be different from that on another side) and that the angle of taper can change continuously (i.e. be curved) over the distance from base **30** to apex **29.** In the latter case, the angle of taper is defined as the angle of the tangent to the side of the capillary at its point of minimum apex opening dimension. Also included in the term tapered capillary is a slot formed into topsheet **22,** said lot having finite length less than the width of topsheet **22** and having its sides and ends tapered at angles analogous to those hereinafter described in relation to a circular tapered capillary.

The angle of taper is represented by $\alpha$ in FIG. **3.** The angle of taper suitable for use in the topsheet of this invention is from about 10° to about 60°.



Base opening dimension, except for the hereinbefore mentioned slot, is defined as the maximum open measurement in the plane of topsheet **22** at tapered capillary **26.** Apex opening dimension, except for the hereinbefore mentioned slot, is defined as the maximum open measurement in the apex of tapered capillary **26** which apex is remote from the plane of the topsheet **22.** When the tapered capillary is in the form of a frustrum of a conical surface, the base and apex opening dimensions are, respectively, base diameter **28** and apex diameter **27.** Base diameter and apex diameter are hereinafter used interchangeably with, respectively, base opening dimension and apex opening dimension.

When the tapered capillary of this invention is in the form of a slot having a finite length less than the width of the topsheet, base opening dimension and apex opening dimension refer to the minimum open measurements in the base of the slot in the plane of topsheet **22** and the apex of the slot remote from the plane of topsheet **22.** That is, base and apex opening dimensions refer to the widths rather than to the length of the slot.

Tapered capillary apex diameter **27** is a diameter which will allow liquid to readily pass from the surface of topsheet **22** to absorbent pad **23.** Apex diameter **27** is from about 0.004 to about 0.100 inch (0.010 to 0.254 centimeter), preferably from about 0.005 to about 0.020 inch (0.013 to 0.051 centimeter).

Tapered capillary base diameter **28** is selected to satisfy two criteria. The first of these is the subjective feel of the surface of the topsheet which contacts the skin of the user. It has been discovered that the aforementioned polyethylene can be made to exhibit pleasing, clothlike, non-waxy attributes when base diameter **28** is within the range from about 0.006 to about 0.250 inch (0.015 to 0.635 cemtimeter). Preferably base diameter **28** should be within the range of from about 0.030 to about 0.060 inch (0.076 to 0.152 centimeter). The second criterion is that the capillary base diameter be small enough to allow an expected liquid droplet to bridge across at least one capillary. This criterion is satisfied by the above dimensions for disposable diapers.

The height of the tapered capillary is defined as the distance between the outermost surface of topsheet **22** (i.e., that surface which normally contacts the skin of the user) and the apex **29** of tapered capillary **26.** This height, of course, depends upon apex diameter **27,** base diameter **28,** and angle of taper $\alpha$ which have been selected as hereinbefore described. The height of the tapered capillary should provide a structure with a minimum tendency to collapse in use. The characteristics of the material of construction of topsheet **22** in large measure determine suitable ranges for the height. When topsheet **22** is low density polyethylene of from 0.001 to 0.002 inch thickness and apex diameter **27** and base diameter **28** are in the preferred range, and angle of taper $\alpha$ is in its critical range, the height of the tapered capillary can be from about 0.003 to about 0.159 inch (0.008 to 0.404 centimeter).

It is necessary that the apex **29** of the tapered capillary **26** be in intimate contact with absorbent pad **23.**

Practical absorptive devices such as disposable diapers must be constructed so there is no reverse flow of fluid when the absorbent element is placed under pressure as by an infant sitting on or moving about in a wet disposable diaper. Protection from this pressure induced reverse flow is obtained if the absorbent element

is constructed so as to be less than totally saturated at its expected maximum fluid content. That is to say, the absorbent element should be designed and constructed to contain a significantly larger quantity of fluid than it is anticipated that the absorptive device will be required to contain in a practical use situation. For the preferred absorptive pad described hereinafter, a practical anticipated liquid loading of from 3 times to 6 times the dry weight of the pad is satisfactory. It should be noted that this permissible loading is somewhat higher than that which is acceptable because of surface wetness characteristics when the usual non-woven topsheet is used with a disposable diaper. One benefit from this increased loading is a possible net reduction in the amount of material used in the absorbent pad of this invention as compared to that used in ordinary disposable diapers.

Another necessary criterion is apparent to those skilled in the art: the topsheet must allow rapid transfer of liquids through it. This rate of transfer depends on several variables such as rate of fluid discharge from the body, viscosity of the fluid, fraction of open area of the topsheet, minimum diameter of tapered capillaries, etc. The proper combination of parameters for any given application can readily be determined by simple experimentation. The preferred dimensions recited herein for disposable diaper topsheets insure rapid transfer of urine into the absorbent element.

A state of relative dryness on the surface of the topsheet implies that most of the liquid which contacts the topsheet is transferred through it to the absorbent element. This in turn implies that each isolated droplet of fluid in contact with the topsheet must be in contact with the base diameter of a tapered capillary. This state of affairs can best be achieved if the land area (the area of the topsheet that exists between the bases of the tapered capillaries) is maintained at a minimum. The minimum limiting value is the case where conical tapered capillaries or pyramidal tapered capillaries are provided in close packed array (where the periphery of the base **30** of each capillary is in contact on all sides with the periphery of the base **30** of adjacent capillaries). The preferred arrangement of minimum land area tends to insure that an individual droplet will contact at least one tapered capillary. A preferred arrangement in disposable diapers is where the tapered capillaries as hereinbefore described are in ordered arrangement with from about 30 to about 1500 tapered capillaries per square inch of topsheet (5 to 231 per square centimeter).

Topsheet **22** provided with tapered capillaries **26** can be manufactured in any of several ways well known in the art. One particularly suitable method is to provide a heated mold with male elements of the shape and arrangement of the desired tapered capillaries (hereinafter a pin mold). Each male element is secured in such a fashion that its apex extends away from the base of the mold. A portion of liquid-impervious material is brought into contact with the heated mold between the mold and a resilient backing plate. Pressure is applied to the combination of mold, liquid impervious material and resilient back plate and tapered capillaries are formed in the liquid impervious material to make the topsheet of this invention. An alternate way of constructing the topsheet of this invention is to subject a portion of liquid-impervious material to vacuum forming over an appropriate mold by means well known in the art. A third way of making topsheet **22** for use in this invention is to cast the topsheet on a mold designed for the purpose and similar to that previously described. After forming tapered capillary structures in one of the three aforementioned ways, it may be necessary to physically remove material from the apex of the tapered capillary structure so as to insure that the apex diameter is the desired value. Such removal of material can be accomplished by, for example, subjecting the apex to controlled abrasion or by heating the formed topsheet so as to melt open the apex.

Absorbent pad **23** of the diaposable diaper exemplified in FIG. **1** can comprise materials commonly used in absorptive devices and well known to the art. A preferred form of suitable absorbent material for the pad **23** is the use of comminuted wood pulp generally referred to as airfelt. When airfelt is used, the tissue paper envelope commonly present in disposable diaper applications can be omitted. Other materials can also be used for the absorbent pad **23** such as a multiplicity of plies of creped cellulose wadding and any equivalents thereof.

As described hereinbefore, absorbent pad **23** must be in contact with the apex **29** of the tapered capillary **26** of the topsheet of this invention. Further, the absorbent pad **23** must preferentially absorb the liquid from apex **29** of the tapered capillary **26.**

Liquid impervious backsheet **24** can be any material well known in the art. A preferred material is low density polyethylene 0.001 to 0.002 inch (0.0025 to 0.0051 centimeter) thick.

The elements of the finished disposable diaper — tapered capillary topsheet **22,** absorbent pad **23** and optional elements such as fluid impervious backsheet **24** — can be assembled into a practical, economical disposable diaper by means well known in the art. An example of such union into disposable diapers is admirably described in the hereinbefore incorporated U.S. Pat. No. Re. 26,151.

As noted, the tapered capillary topsheet of this invention has been described in terms of a disposable diaper. Other absorptive devices well known in the art such as sanitary napkins, catamenial tampons, bed pads, incontinent pads, towels, bandages and the like can be advantageously constructed using the tapered capillary topsheet of this invention. Specific examples of sanitary napkins and catamenial tampons wherein the topsheet of this invention can be used can be found in U.S. Pat. No. 3,800,797 issued to Tunc on Apr. 2, 1974, and U.S. Pat. No. 3,815,601 issued to Schaefer on June 11, 1974, both of which are herein incorporated by reference.

In order to contribute to a better understanding of this invention and not by way of limitation, the following examples are provided.

## EXAMPLE I

Conical tapered capillaries having a base diameter of 0.040 inch and an apex diameter of 0.012 inch and an angle of taper of 45° were formed with a pin mold into a sheet of 0.0015 inch thick "Surlyn", a liquid impervious ionomer film made by the E. I. du Pont de Nemours and Company. A total of 722 capillaries per square inch in regular array were impressed into the film. The topsheet was placed so that the apices of the tapered capillaries were in contact with an absorbent pad made from airlaid softwood fibers. The resulting absorbent structure allowed droplets of saline solution to pass through the topsheet into the absorbent pad. The free

surface of the topsheet exhibited a dry feel and was pleasing to the touch.

## EXAMPLE II

Example I is repeated, except that 320 conical tapered capillaries having a base diameter of 0.060 inch and an apex diameter of 0.012 inch and an angle of taper of 45° are formed in a regular array into each square inch of respectively, Surlyn, and low density polyethylene 0.0015 inch thick. Essentially the same results are observed.

## EXAMPLE III

Pyramidal tapered capillaries having a square base 0.050 inch on each side and a square apex 0.012 inch on each side and an angle of taper of 45° were embossed into 0.0015 inch thick low density polyethylene film. A total of 400 tapered capillaries per each square inch of film were used. Essentially the same results as in Example I were observed when the topsheet was placed in proper contact with the airfelt of Example I. Further, this absorbent structure was used in the construction of a disposable diaper according to the teaching of Duncan et al. in the aforementioned Re. 26,121. When used in a practical way on infants, the disposable diaper exhibited a drier, more comfortable surface in contact with the infant than can be obtained with a conventional hydrophobic nonwoven topsheet.

## EXAMPLE IV

Example II, including the bringing of the apices of the formed cones into contact with an absorbent airfelt, is repeated using formed cones having base diameter, apex diameter, angle of taper, and number of capillaries per square inch, respectively, as follows: 0.030 inch, 0.010 inch, 45°, 1280; 0.060 inch, 0.012 inch, 60°, 320; and 0.100 inch, 0.015 inch, 30°, 74. Satisfactory results in terms of transfer of fluid and dry surface feel are obtained.

What is claimed is:



**1.** A disposable diaper comprising a topsheet and an absorbent element wherein said topsheet is a liquid-impermeable material provided with tapered capillaries each having a base in the plane of said topsheet and an apex remote from said plane of said topsheet, having an angle of taper of from about 10° to about 60°, base opening dimension of from about 0.006 to about 0.250 inch, and apex opening dimension of from about 0.004 to about 0.100 inch; and wherein said absorbent element is in intimate contact with said apex of said tapered capillaries.

**2.** The disposable diaper of claim **1** wherein said base opening dimension is from about 0.030 to about 0.060 inch and said apex opening dimension is from about 0.005 to about 0.020 inch.

**3.** The disposable diaper of claim **2** wherein said tapered capillaries are in the form of frustrums of conical surfaces.

**4.** The disposable diaper of claim **2** which includes as an additional element a fluid-impervious backsheet.

**5.** The disposable diaper of claim **1** which includes as an additional element a fluid-impervious backsheet.

**6.** An absorptive structure for absorbing and containing fluid bodily discharges comprising a topsheet and an absorbent element wherein said topsheet is a liquid-impervious material provided with tapered capillaries having a base in the plane of said topsheet and an apex remote from said plane of said topsheet, having an angle of taper of from about 10° to about 60°, base opening dimension of from about 0.006 to about 0.250 inch, and apex opening dimension of from about 0.004 to about 0.100 inch; and wherein said absorbent element is in intimate contact with said apex of said tapered capillaries.

**7.** The absorptive structure of claim **6** wherein said base opening dimension is from about 0.030 to about 0.060 inch and said apex opening dimension is from about 0.005 to about 0.020 inch.

**8.** The absorptive structure of claim **7** wherein said tapered capillaries are in the form of frustrums of conical surfaces.

* * * * *

UNITED STATES PATENT AND TRADEMARK OFFICE

# CERTIFICATE OF CORRECTION

PATENT NO. : 3,929,135
DATED : December 30, 1975
INVENTOR(S) : Hugh A. Thompson

It is certified that error appears in the above-identified patent and that said Letters Patent are hereby corrected as shown below:

Column 1, line 54, "3,327,625" should read -- 3,237,625 --.

Signed and Sealed this

Thirty-first Day of May 1977

[SEAL]

*Attest:*

**RUTH C. MASON**
*Attesting Officer*

**C. MARSHALL DANN**
*Commissioner of Patents and Trademarks*