Aug. 2, 1966 M. J. HARTHOLZ 3,264,601

ELECTRICAL CONNECTOR

Filed March 10, 1964 2 Sheets-Sheet 1

Fig. 1.

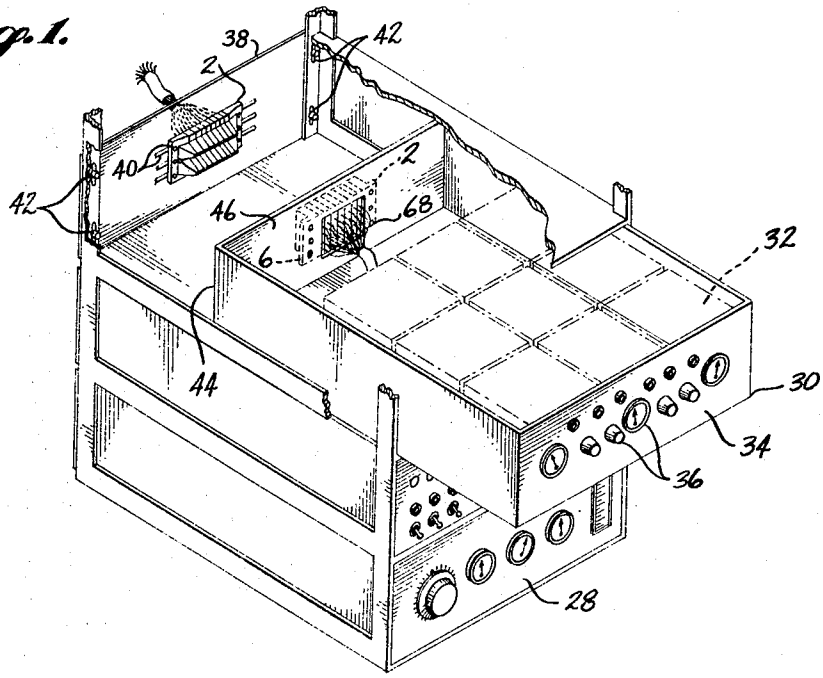

Fig. 2.

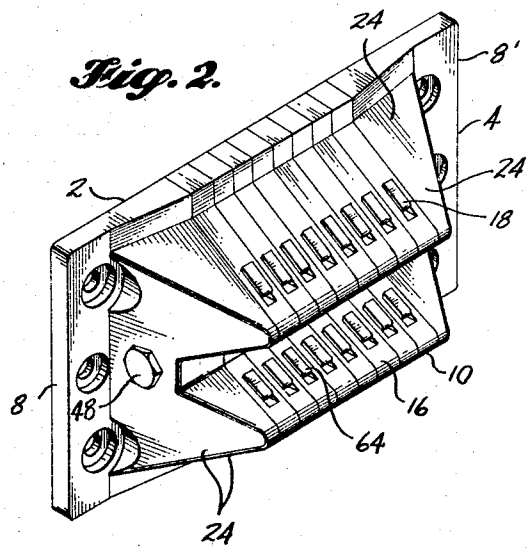

Fig. 3.

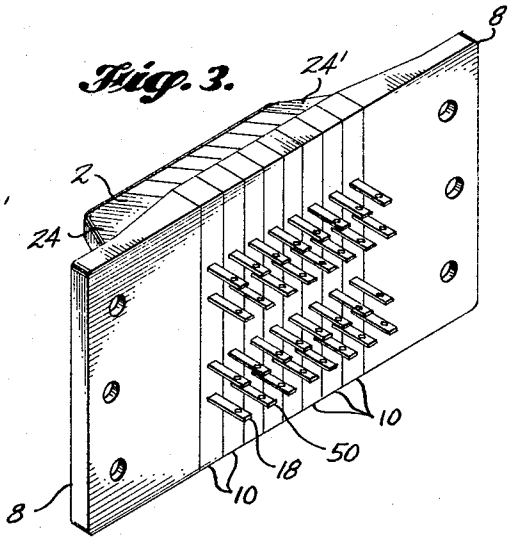

INVENTOR
MARSHALL J. HARTHOLZ

BY Wilson deBoges

AGENT

ELECTRICAL CONNECTOR

Filed March 10, 1964 2 Sheets-Sheet 2

Fig. 4.

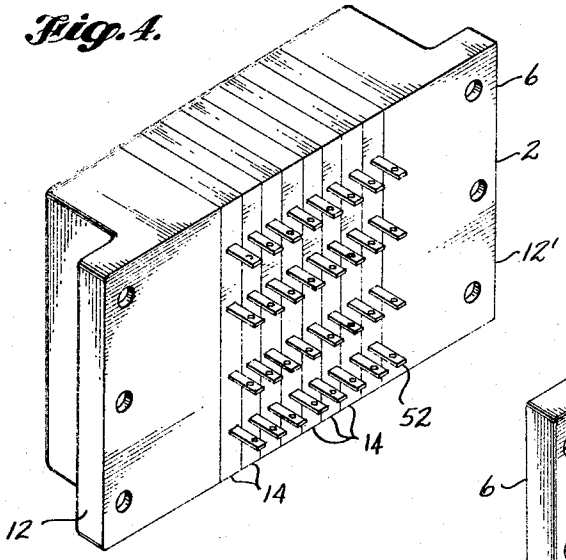

Fig. 5.

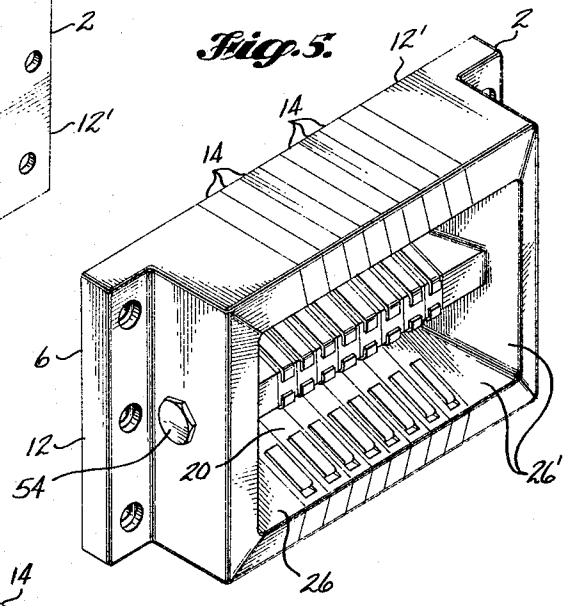

Fig. 6.

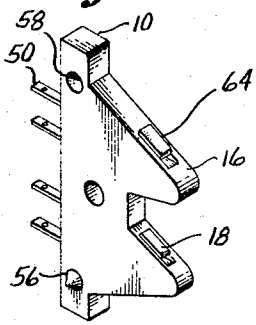

Fig. 7.

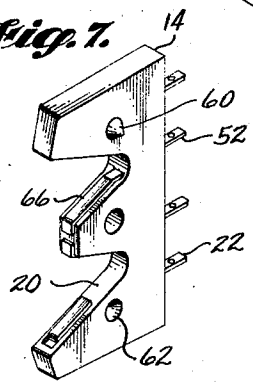

Fig. 8.

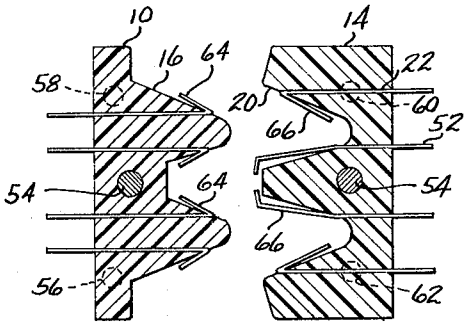

Fig. 9.

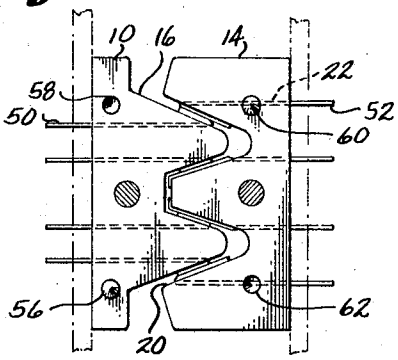

INVENTOR.
MARSHALL J. HARTHOLZ

BY

AGENT

United States Patent Office

3,264,601

Patented August 2, 1966

1

3,264,601
ELECTRICAL CONNECTOR

Marshall J. Hartholz, Seattle, Wash., assignor to The Boeing Company, Seattle, Wash., a corporation of Delaware

Filed Mar. 10, 1964, Ser. No. 350,784
7 Claims. (Cl. 339—176)

This invention relates generally to an electrical connecting device, but more particularly to an electrical multiple connector used for connecting electronic components with an electrical power source, in console or cabinet type arrangements.

It is common practice in the field of communications, control systems and computers, etc., to mount various groups of electronic components in drawers, arranged with sliding mechanism, in a cabinet; each drawer is usually provided with an operating panel in front, having switches, controls, and meters, or the like for adjustment or monitoring of the electrical equipment inside.

In the present known art most sliding drawers have cabling connections that follow the drawer when opened and in case of repair, a technician has to reach inside of the opened drawer to unfasten the cabling which is inconvenient, dangerous and could damage the electrical components.

In other existing devices, pin and socket type arrangements are used which disconnect the power source as soon as the drawer is opened. However, multi-contact connectors having pin and socket type arrangements are difficult to align properly, require special guide and guide pins and demand very close tolerances, thus resulting in a very expensive installation procedure. Also, heavy drawers and backing equipment are essential in order to prevent flexing of the pin and socket type installation which easily results upon slamming the drawer, or through excessive pressure against the front panel, and thus results in a poor electrical contact between the pins and sockets.

Other types of connectors work on a friction spring principle which has the disadvantage of wear and corrosion, and thus results in poor electrical contact.

In accordance with the principles of the present invention, a connector is provided which comprises male and female members having complementary irregularly shaped mating surfaces. Proper mating of the male and female members is accomplished by closing and latching the drawer. Any misaligned contact terminal will be readily corrected by the shape of the male and female member which permits longitudinal and transversal displacement, and thus provides the desired full contact engagement of all of the terminals by compression.

It is an object of the present invention to provide a multi-contact connector which overcomes the deficiencies of the prior art.

Another object of the present invention is to provide a multi-contact connector which can be easily separated, and firmly assembled.

A further object of the present invention is to provide a multi-contact connector having cooperating contact terminals which yield to full contact engagement with one another by compression.

Still another object of the present invention is to provide a multiple connector comprised of two parts, which during initial installation can be easily aligned with each other.

Still another object of this invention is to provide a connector comprised of two mapor parts; a male member and a female member, having complementary irregularly shaped surfaces, which prevent misalignment in a longitudinal as well as in a transverse direction, when the

2

male and female members are in a closed position, and assure a tight and solid mechanical connection as well as proper mating for the electrical contacts.

Still another object of this invention is to provide a connector which can be readily converted to the number of terminals as is required by its application.

For a more detailed understanding of this invention, reference is made to the accompanying drawings in which:

FIG. 1 is a section of an electronic console, or cabinet, with one drawer partially opened showing the male and female multiple connector in the open position.

FIG. 2 is a perspective front view of the assembled multiple male connector part.

FIG. 3 is a perspective rear view of the assembled multiple male connector part.

FIG. 4 is a perspective front view of the assembled multiple female connector part.

FIG. 5 is a perspective rear view of the assembled multiple female connector part.

FIG. 6 is a perspective view showing one male wafer section.

FIG. 7 is a perspective view showing one female wafer section.

FIG. 8 is a cross section of a male and a female wafer section in the open position and shows, in particular, the electrical connector strips.

FIG. 9 is a plan view of a male and female wafer section in the closed position.

In general, the electrical connector **2**, as shown in the drawings, includes two major parts, a male member **4**, and a female member **6**. The male member **4**, comprises a sandwich construction, having two end portions **8** and **8'** with several male wafer members **10**, operably stacked between the two end portions **8** and **8'**. The female member **6**, comprises a sandwich construction having two end portions **12** and **12'**, with several female wafer members **14**, operably stacked in between the two end portions **12** and **12'**. The male wafer members **10** are shaped so as to provide a plurality of convex surfaces **16**, having resilient electrical conductor means **18**. The female wafer members **14** are shaped so as to provide a plurality of concave surfaces **20**, having resilient electrical conductor means **22**, and the concave surfaces **20** being complementary to the convex surfaces **16**, of the male wafer members **10**, when the male member **4** and female member **6** are in the closed position.

The male end portions **8** and **8'** are provided with sloped surfaces **24**, and the female end portions are provided with complementary sloped surfaces **26**.

The male and female conductor means, respectively **18** and **22**, assure electrical connection when the male member **4** and female member **6** are interconnected with each other. Any movement of the male member **4** with respect to the female member **6** in the longitudinal direction is sustained by the sloping surfaces **24** and **24'**, abutting the complementary sloping surfaces **26** and **26'**. Likewise, any movement of the male member **4** with respect to the female member **6** in the transverse direction is sustained by the convex surfaces **16** abutting the concave surfaces **20**. Therefore, as explained above, a tight and solid mechanical connection is provided between the male member **4** and the female member **6**. The shape of the sloping surfaces **24** and **24'** and the complementary surfaces **26** and **26'** as well as the shape of the convex surfaces **16** and concave surfaces **20**, also provides proper mating of the electrical conductor means **18** and **22**.

Referring now to FIG. 1, a perspective cut-away view shows a part of a cabinet **28** with a drawer **30**, containing electrical components **32**, and having a front panel **34** with electrical controls **36**.

The electrical connector 2 is shown in the open position which makes it possible to observe the individual mounting of the male member 4 and the female member 6. The male member 4 is suitably mounted on a chassis member 38 by adjustable mounting means 40 for horizontal alignment of the male member 4 with the female member 6.

Likewise the chassis member 38 is suitably mounted on the cabinet 28, with adjustable mounting means 42 for vertical alignment of the male member 4 with the female member 6 when drawer 30 is in the closed position, thus a simple alignment procedure is provided during initial installation of the male member 4 with the female member 6. The female member 6 is suitably mounted on the rear side 44 of the rear drawer panel 46.

FIG. 2 is a perspective view showing the front side of the male member 4, of the connector 2, having the two end portions 8 and 8′, and the several male wafer members 10 stacked in a sandwich construction relationship and clamped together by clamping means 48. Resilient conductor means 18, for assuring an electrical connection, are imbedded in the male wafer members 10.

FIG. 3 is a perspective view of the rear side of the male member 4 of the connector 2 showing terminal portions 50 of the male resilient conductor means 18, to which electrical cables (not shown) are to be attached.

FIG. 4 is a perspective view showing the front side of the female member 6, of connector 2, having two end portions 12 and 12′, and several female wafer members 14. Each female wafer member 14 shows terminal portions 52 for attaching electrical wiring from the electrical components 32, as illustrated in FIG. 1.

FIG. 5 is a perspective view of the rear side of the female member 6 of connector 2, showing clamping means 54 for clamping two female end portions 12 and 12′ and the several female wafer members 14 in a sandwich construction relationship.

FIG. 6 is a perspective view of a single male wafer member 10 showing a pin 56 and a groove 58 which coincides respectively with a groove and pin in an adjacent male wafer member 10, or an adjacent male end portion 8 and thus prevents the male wafer member 10 from rotating about the clamping means 48, when assembled as a part of the male member 4 of the connector 2.

FIG. 7 is a perspective view of a single female wafer member 14 showing a pin 60 and a groove 62 which coincides respectively with a groove and pin in an adjacent female wafer member 14 or an adjacent female end portion 12 and thus prevents the female wafer member 14 from rotating about the clamping means 54 when assembled as a part of the female member 6 of the connector 2.

FIG. 8 is a cross section of the male wafer member 10 and the female wafer member 14 shown in the open position and illustrates, in particular, the male resilient conductor means 18 and the female resilient conductor means 22. The resilient lip portion 64 of the male conductor means 18 projects away from the convex surface 16, but is adapted to be compressed against the convex surface 16 when the male wafer member 10 is interconnected with the female wafer member 14, as shown in FIG. 9. The resilient lip portion 66 of the female conductor means 22 likewise projects away from the concave surface 20 and presses against the resilient lip portion 64 when the male wafer member 10 is interconnected with the female wafer member 14, as shown in FIG. 9.

Assuming that several electrical components 32 are mounted in a drawer 30, to be installed in a cabinet 28, the number of electrical lead wires to be connected to electrical components outside the drawer 30 will be known. In accordance with the number of lead wires, the number of female wafer members 14 can be determined and thus the female member 6 of the electrical multi-connector 2 can be assembled by stacking and matching the female wafer member 14 between the two female end portions 12 and 12′, and tightening them together with clamping means 54.

Likewise the number of male wafer members 10 will equal the number of female wafer members 14, and thus the male member 4 of the electrical multiple connector 2 can be assembled by stacking and matching the male wafer members 10 and tightening them together with clamping means 48.

The female member 6 completely assembled will then be mounted to the rear side 44 of the rear drawer panel 46 by using fastening means 68, and the lead wires can be connected to the terminal portions 52 of the female conductor means 22. The drawer 30, installed with the female member 6, will then be closed and latched after which the male member 4 will be inserted and manually held together with the female member 6, and fastened by the adjustable mounting means 40 and 42, which operation will complete the initial alignment procedure of the male and female members 4 and 6 of the multiple electrical connector 2.

The initial alignment and installation procedure as described above requires little time, is very simple, and is one of the features of this invention. Another feature of this invention is the mating of the male and female conductor means 18 and 22. Referring to FIG. 8, the lip portion 64 of the male conductor means 18 and the lip portion 66 of the female conductor means 22 are shown as being projected away from the respectively adjacent convex surface 16 and concave surface 20. However, when the male member 4 and female member 6 are in closed position, as shown in FIG. 9, the lip portions 64 and 66 are compressed together by two forces; (a) their own resilient spring action which yields them into a full contact engagement with one another, and (b) the compression force of the male member 4 and the female member 6, caused by the closed and latched drawer 30.

Minor misalignment of the drawer 30, or other elements, will not cause a failure of the electrical connection, because the convex and concave surfaces 16 and 20 will tend to align the male and female members 4 and 6 in the transverse direction, and also the sloping surfaces 24 and 24′ and the complementary surfaces 26 and 26′ will tend to align the male 4 and the female member 6 in the longitudinal direction.

Therefore, as described and explained above, a tight and solid mechanical as well as a firm and reliable electrical connection is provided between the male and the female members 4 and 6 of the electrical connector 2.

Although various minor structural modifications might be suggested to the preferred embodiment herein described by way of illustrative example only, it should be understood that many changes could be effected to exemplary structure herein described without departing from the spirit of the present invention, and, accordingly, it should be further understood that the inventor wished to enclose within the scope of the patent warranted hereon all such modifications as reasonably and properly come within the scope of the inventor's contribution to the art.

I claim as my invention:

1. An electrical connector comprising:

a male member having male end portions and at least one male wafer operably clamped in sandwiched relationship between said male end portions;

a female member having female end portions and at least one female wafer operably clamped in sandwiched relationship between said female end portions;

said male wafer having a longitudinally extending convex surface, and said female wafer having a longitudinally extending concave surface which coincides with said convex surface of said male wafer when said male and female members are in a closed position;

each of said end portions of said male member being provided with a transversely sloping surface defining

a transversely extending convex surface and a longitudinally sloping surface defining a longitudinally extending convex surface, and each of said end portions of said female member being provided with a complementary, transversely sloping surface defining a transversely extending concave surface and a complementary, longitudinally sloping surface defining a longitudinally extending concave surface which coincide with said convex surfaces of one of said male end portions when said male and female members are in a closed position; said sloping male and female end portions functining to align said male and female members in a longitudinal direction and in a transverse direction when said members are moved to their closed position; and

electrical conductor means associated with said male wafer, and complementary electrical conductor means associated with said female wafer for providing electrical conductivity between said male and said female members when said members are in their closed position.

2. An electrical connector as claimed in claim 1 wherein said electrical conductor means and said complementary electrical conductor means are strips of electrical conductive material.

3. An electrical connector as claimed in claim 1 wherein said electrical conductor means includes a terminal portion, an intermediant portion, and a contact portion, said intermediant portion being imbedded in said male wafer member and said contact portion projecting partly along said convex surface of said male wafer member, and said complementary conductor means including a terminal portion, an intermediant portion, and a contact portion, said intermediant portion being imbedded in said female wafer member and said contact portion projecting partly along said concave surface of said female wafer member.

4. An electrical connector as claimed in claim 3 wherein said contact portion of said electrical conductor means is resilient and projects outwardly, but adjacent along said convex surface of said male wafer member and said contact portion of said complementary electrical conductor means, is resilient and projects outwardly but adjacent along said concave surface of said female wafer member.

5. An electrical connector comprising in combination:

(A) a male member, having two end portions, each with sloping surfaces and a plurality of male wafer members operably clamped in sandwich stacked relationship in between said two end portions;

(B) a female member having two end portions, each with sloping surfaces adapted to match said sloping surfaces of each of said two end portions of said male member, a plurality of female wafer members operably clamped in sandwich stacked relationship in between said two end portions of said female member;

(C) each of said plurality of male wafer members provided with two convex surfaces and each of said plurality of female wafer members provided with two complementary concave surfaces, and

(D) electrical conductor means incorporated with said plurality of male wafer members and complementary electrical conductor means incorporated with said plurality of female wafer members for assuring electrical conductivity between said male member and said female member when in a closed position with one another.

6. An electrical connecting device comprising:

a male member and a female member;

one of said members being mounted on a drawer operably arranged in an associated cabinet, and the other of said members being mounted on said cabinet so that said male and female members will be in a closed position when said drawer is closed in said cabinet, and in an open position when said drawer is opened;

said male member comprising a plurality of male wafers operably clamped in sandwiched relationship;

said female member comprising a plurality of female wafers operably clamped in sandwiched relationship;

each of said male wafers having means defining a longitudinally extending convex surface, and each of said female wafers having means defining a longitudinally extending concave surface which coincides with said convex surface of one of said male wafers when said drawer is closed in said cabinet; and

electrical means associated with said male and female members for providing an electrical path therebetween when said drawer is in a closed position.

7. An electrical connecting device comprising:

a male member and a female member;

one of said members being adapted to be mounted on a drawer operably arranged in an associated cabinet, and the other of said members being adapted to be mounted on said cabinet so that said male and female members will be in their closed position when said drawer is closed in said cabinet, and in an open position when said drawer is opened;

said male member including two male end portions and a plurality of male wafers secured therebetween;

said female member including two female end portions and a plurality of female wafers secured therebetween;

each of said male wafers having means defining a longitudinally extending convex surface, and each of said female wafers having means defining a complementary, longitudinally extending concave surface adapted to receive the convex surface of one of said male wafers;

each of said male end portions including a transversely sloping surface defining a transversely extending convex surface and a longitudinally sloping surface defining a longitudinally extending convex surface, and each of said female end portions including a complementary, transversely sloping surface defining a transversely extending concave surface and a complementary, longitudinally sloping surface defining a longitudinally extending concave surface which coincide with and are adapted to receive one of said male end portions when said drawer is in a closed position; whereby said tranversely and longitudinally extending convex and concave surfaces of said male and female end portions will cooperate to align said male and female members in a longitudinal direction and in a transverse direction when said drawer is closed; and

electrically conductive means provided in said male and female wafers for providing an electrical path when said drawer is in a closed position.

References Cited by the Examiner

UNITED STATES PATENTS

2,749,526	6/1956	Petersen	339—65 X
2,899,669	8/1959	Johanson	339—45
3,116,959	1/1964	Abodeely	339—147 X
3,173,734	3/1965	Hartwell	339—49
3,196,378	6/1965	Beckwith	339—176 X

EDWARD C. ALLEN, *Primary Examiner.*

W. DONALD MILLER, *Examiner.*