July 9, 1935. W. A. WALTHERS 2,007,512

WEED CONTROL MECHANISM

Filed Aug. 20, 1934 2 Sheets-Sheet 1

Fig. 1.

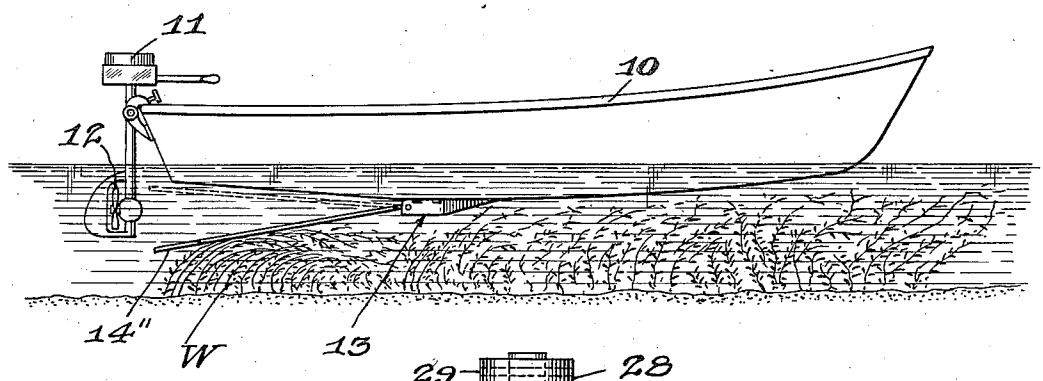

Fig. 2.

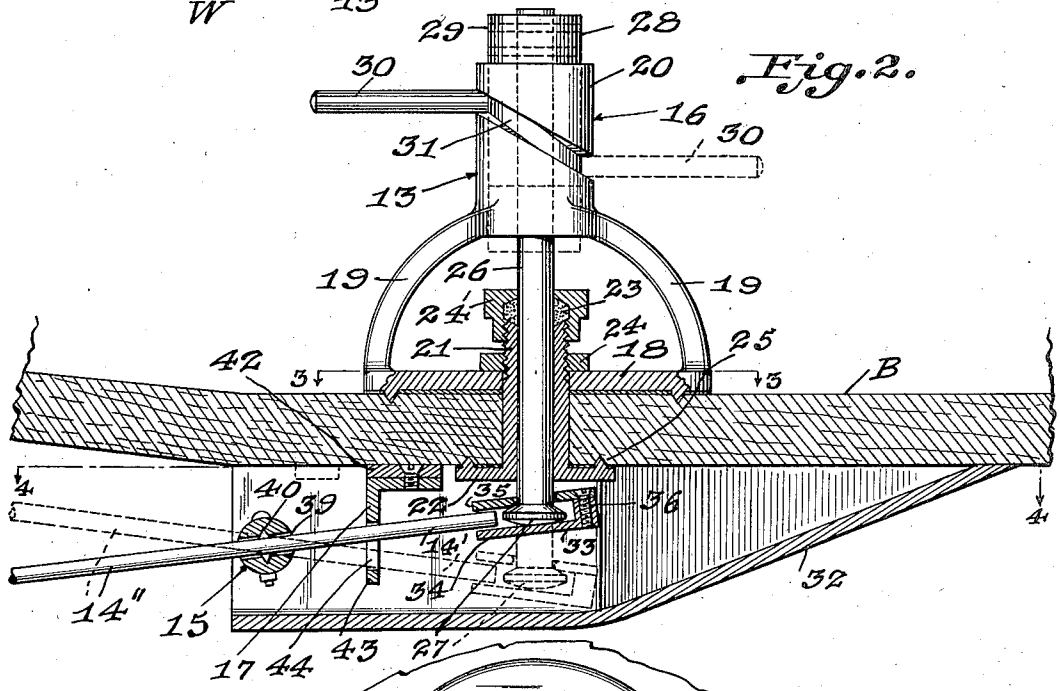

Fig. 3.

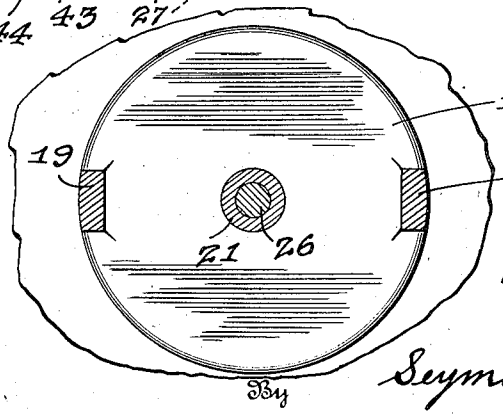

Inventor
W. A. Walthers
By Seymour & Bright
Attorney

July 9, 1935. W. A. WALTHERS 2,007,512

WEED CONTROL MECHANISM

Filed Aug. 20, 1934 2 Sheets-Sheet 2

Fig. 4.

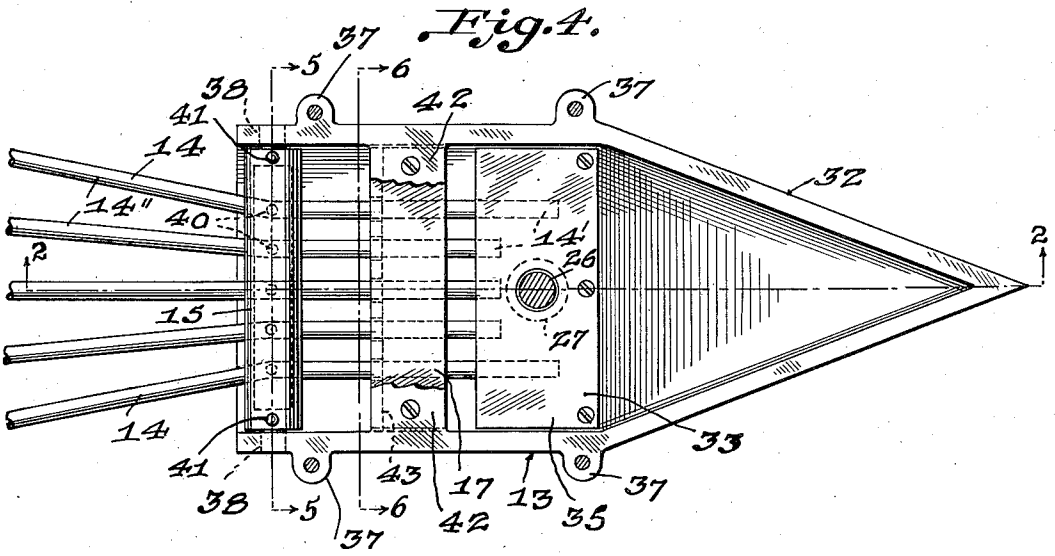

Fig. 5.

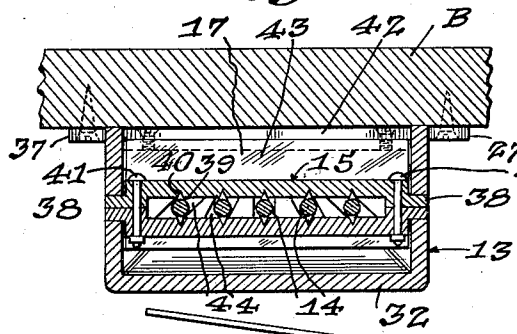

Fig. 6.

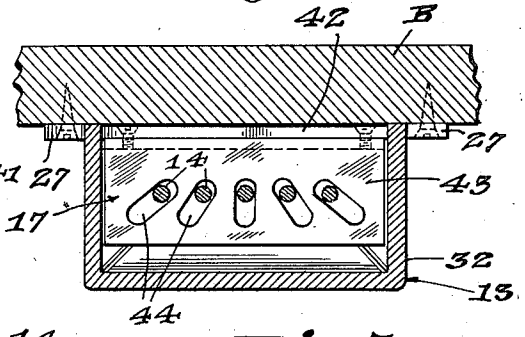

Fig. 7.

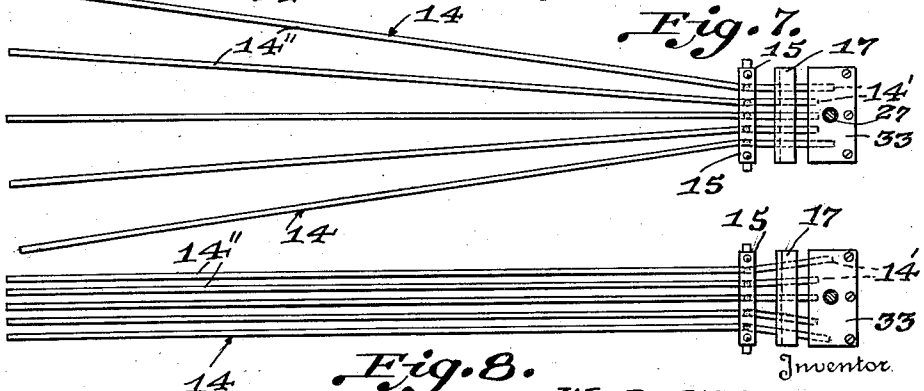

Fig. 8.

Inventor

W. A. Walthers

By Seymour & Bright

Attorneys

Patented July 9, 1935 2,007,512

UNITED STATES PATENT OFFICE

2,007,512

WEED CONTROL MECHANISM

William A. Walthers, Dalton, Wis.

Application August 20, 1934, Serial No. 740,682

19 Claims. (Cl. 115—42)

This invention relates to improvements in weed control mechanism, and more particularly to a novel device adapted to be attached to the bottom of a boat or the like for the purpose of deflecting heavy and surface weeds or the like.

A difficulty commonly encountered in connection with the navigation of boats or the like, particularly those propelled by means of outboard motors, in shallow streams, is that the propeller often becomes clogged by entangling weeds or the like which abound on the bed or beds of such streams, often resulting in irreparable damage to the comparatively delicate and expensive mechanism of the outboard motor, particularly its propeller.

The primary object of the present invention is to overcome the above mentioned difficulty by eliminating or deflecting the aforementioned vegetative growth (heavy or surface weeds or the like) from the path of said propeller. To this end, according to the present invention, a novel and improved weed rod controlling or deflecting mechanism is provided on the bottom of the boat in advance of the propeller.

Another object is to provide a weed deflecting mechanism of the character above outlined which is of simple construction but of high efficiency and capable of ready and easy operation.

A further object is to provide a device of this character adapted to be easily mounted upon the bottom of a boat or the like, and of such construction as to offer no substantial resistance to the forward movement of the boat.

A still further object is to furnish a device of this character with control means for placing the weed deflecting rods into operative or inoperative position, said control means being readily available for manipulation by the operator from within the boat.

With the foregoing objects outlined and with other objects in view which will appear as the description proceeds, the invention consists in the novel features hereinafter described in detail, illustrated in the accompanying drawings, and more particularly pointed out in the appended claims.

In the drawings:

Fig. 1 is a side elevation of a boat provided with an outboard motor and embodying my improved device.

Fig. 2 is a side elevation partly in section of a preferred embodiment of my device, said section being taken on the line 2—2 of Fig. 4.

Fig. 3 is a plan view taken on the line 3—3 of Fig. 2.

Fig. 4 is a top plan view of the weed deflector mechanism per se, taken on the line 4—4 of Fig. 2.

Fig. 5 is a cross sectional view taken on the line 5—5 of Fig. 4.

Fig. 6 is a similar view taken on the line 6—6 of Fig. 4.

Figs. 7 and 8 are top plan views showing the weed deflecting rods of my device in operative and inoperative positions respectively.

Referring to the drawings in detail, Fig. 1 illustrates a conventional boat 10, on the stern of which is mounted an outboard motor 11 of any suitable type provided with the usual propeller 12. Securely mounted on the bottom of boat 10 is a weed deflecting device constructed in accordance with the present invention and indicated generally at 13.

As clearly shown in Figs. 2, 7 and 8 of the drawings, the illustrated exemplary preferred embodiment of the invention comprises, as its essential elements, the weed deflecting rods 14, bearing means 15 for supporting the rods 14, actuating means 16 for imparting movement to the rods 14 to and from operative and inoperative position thereof, and guide means 17 for determining the direction of such movement.

Referring first to the actuating mechanism 16 of my device, this includes a spindle supporting standard comprising a base plate 18, securely mounted on the bottom B of boat 10, and a plurality of upwardly extending arcuate legs 19 or the like which terminate at the upper ends thereof in a hollow cylindrical guide bearing 20. Extending through the bottom B of boat 10 and through the base plate 18, is a sleeve or bushing 21 which is flanged at its lower end 22 and terminates in adjustable packing 23 at its upper end, said packing being held in position by an adjustable nut 24' threaded on said sleeve. Lock nut 24, threaded onto the exterior of sleeve 21, securely retains the latter in position, supplementary means for preventing movement of the sleeve being provided in the form of conical lugs 25 on flange 22, said lugs biting into the bottom B of the boat. The bore or sleeve 21 is arranged in alinement with the bore of guide bearing 20 so that control shaft or spindle 26 may extend therethrough. Spindle 26 terminates at the lower end thereof in a headed enlargement 27, and is provided at its upper end with a guide 28, securely affixed thereto by means of bolts 29 or the like. Guide 28 is journalled for sliding movement in guide bearing 20. Threaded into the exterior surface of guide 28 is a control lever

30 which extends from the guide through a parti-circumferential cam slot 31 provided in the guide bearing 20. It is apparent that by simply moving lever 30 along the cam slot 31 from the uppermost lever position, shown in full lines in Fig. 2, to the lowermost lever position, shown in dotted lines in Fig. 2, a corresponding movement is imparted to the guide 28 and control spindle 26. Return of control lever 30 to its initial position will result in a return movement of the guide and spindle.

As shown on the drawings, the lower end of the spindle 26 projects beyond the bottom of the boat into a housing 32. Loosely mounted on the head 27 of the spindle 26, within the housing 32, is a control plate member 33. The latter is a two part construction consisting of a lower plate 34, which is provided with upstanding flanges on three sides thereof, and an upper plate 35 which is bolted to the lower plate 34 at 36 and is provided with a substantially central opening through which the spindle 26 extends. As is clearly shown in Fig. 2, the plates 34 and 35 define an open ended casing, the internal height of which is substantially equal to that of the head 27.

Housing 32, which is mounted onto the bottom B of the boat by means of bolts 37, is open at the rear end thereof and terminates at its front end in upwardly sloping and transversely tapering walls, thereby decreasing the resistance to forward movement of the boat. In addition to the control plate member 33 and the lower end of the spindle 26, the housing 32 also encloses the rod supporting means 15 and the guide means 17.

Supporting means 15 consists of a two part cylindrical member extending between the walls of the housing 32 at the posterior end thereof and being supported by gudgeons 38 extending from the ends of the bearing member 15 into suitable bearing openings in the housing walls. Bearing member 15 is provided with a plurality of spaced substantially horizontally disposed bores 39, corresponding in number to the number of rods 14 which pass through these bores. Vertically alined pivot seats are countersunk from the bores 39, and pivots 40, mounted on the rods 14, are seated in said seats (see Figs. 2 and 5). The two parts of member 15 are bolted together by suitable securing means 41 or the like. As a result of the aforedescribed construction of member 15, it will be seen that the rods 14 are severally mounted for universal movement, being capable of movement about the longitudinal axis of gudgeons 38 and about their own several pivots 40.

Depending from a transverse bar 42, which extends across the top of the housing 32, is a guide member 17. This member, which, as shown, is arranged between the bearing member 15 and the actuating means 16, consists of an angle iron or the like 43, one leg of which is bolted to the bar 42, and the other or depending leg of which is provided with a plurality of slots 44 (corresponding in number to the number of rods 14), through which the weed rods are also passed. The central slot 44, which coacts with the central rod 14, is arranged vertically, while the slots on either side of the central slot are inclined upwardly toward the latter, the degree of inclination of the outermost slots being greater than that of the intermediate slots, and the inclination of corresponding slots being substantially the same but in opposite directions. The purpose of this arrangement will hereinafter appear.

Rods 14 may be considered as comprising relatively short anterior portions 14' and relatively elongated posterior portions 14'', the line of demarcation between such anterior and posterior portions extending through pivots 40. Rods 14 extend, as shown in Fig. 1, from a point adjacent the stern of the boat slightly forward of the propeller 12, which is to be protected, through the bores 39 of the support 15, through slots 44 of the guide 17, terminating finally within plate member 33, through the open end of which they project.

Intermediate rods 14 are preferably somewhat shorter than outermost rods 14, as a result of the disposition of head 17 within the member 33.

Central rod 14 is substantially rectilinear, i. e. the anterior and posterior portions thereof are in alinement. The posterior and anterior portions, 14' and 14'', of the other weed deflecting rods 14, are severally bent relative to each other, as clearly shown in Figs. 4 and 7. The relationship between the angles of bend or bent rods 14 and the angles of inclination of inclined slots 44 is such that when lever 30 is in its uppermost position, i. e. when anterior portions 14' are at the top of slots 44, these portions 14' are mutually parallel (Fig. 7) while portions 14'' are lowered and in the expanded or spread out operative weed-deflecting position (Figs. 1 and 7). On the other hand, when the lever 30 is lowered, depressing the spindle 26, plate member 33 and portions 14', the latter are positioned adjacent the lower ends of slots 44 and, as a result of the downwardly flared arrangement of the latter, portions 14' are spread apart, while portions 14'' assume the raised and parallel inoperative position, as shown in Fig. 8 and in dotted lines in Fig. 1.

Bores 39 are provided with proper clearance to enable the rods 14 to move freely during movement thereof. The extent of movement of the rods is, of course, limited by the extent and position of the slots 44.

The operation of the device is deemed to be obvious from the foregoing description thereof. The action of the weed deflecting rod portions 14'', when in their lowered and operative position, is clearly illustrated in Fig. 1 of the drawings, it being evident that they will clear a proper channel for the propeller 12 through weeds and other vegetative growth W, thus preventing entanglement of the propeller in such growth and avoiding possible injury thereto. It is also clear that the rod portions 14'' offer little or no resistance to forward movement of the boat when they are in the raised or inoperative position shown in broken lines in Fig. 1.

From the foregoing it is believed that the construction, operation and advantages of the invention may be readily understood, and it is apparent that changes may be made in the details disclosed, without departing from the spirit of the invention, as expressed in the claims.

What I claim and desire to secure by Letters Patent is:

1. In combination with a boat having a propeller at the stern thereof, means for clearing a channel through vegetative growth for said propeller, said means comprising a plurality of weed deflecting rods normally arranged adjacent the bottom of the boat in advance of said propeller, and means for lowering said rods independently of said propeller into weed deflecting position.

2. In combination with a boat having a pro-

peller at the stern thereof, means for clearing a channel through vegetative growth for said propeller, said means comprising a plurality of weed deflecting rods normally arranged adjacent the bottom of the boat in advance of said propeller, and manually operated means for lowering said rods independently of said propeller into weed deflecting position.

3. In combination with a boat having a propeller at the stern thereof, means for clearing a channel through vegetative growth for said propeller, said means comprising a plurality of weed deflecting rods normally arranged adjacent the bottom of the boat in advance of said propeller, means for lowering said rods independently of said propeller into weed deflecting position, and guide means for controlling the direction and extent of such downward movement of the rods.

4. In combination with a boat having a propeller at the stern thereof, means for clearing a channel through vegetative growth for said propeller, said means comprising a plurality of weed deflecting rods normally arranged adjacent the bottom of the boat in advance of said propeller, means for lowering said rods into weed deflecting position, the last mentioned means including a spindle loosely connected to said rods, and a lever secured to the spindle for moving the latter upwardly or downwardly.

5. In combination with a boat having a propeller at the stern thereof, means for clearing a channel through vegetative growth for said propeller, said means comprising a plurality of weed deflecting rods normally arranged adjacent the bottom of the boat in advance of said propeller, means for lowering said rods into weed deflecting position, the last mentioned means including a sleeve having a cam slot, a spindle slidable in said sleeve and loosely connected to said rods, and a lever secured to said spindle and slidable in said slot.

6. In combination with a boat having a propeller at the stern thereof, means for clearing a channel through vegetative growth for said propeller, said means comprising a plurality of weed deflecting rods normally arranged adjacent the bottom of the boat in advance of said propeller, means for lowering said rods into weed deflecting position, the last mentioned means including a pair of sleeves secured to the bottom of said boat, a spindle passing through said sleeves and loosely connected to one end of said rods, one of said sleeves having a cam slot, and a lever projecting laterally from said spindle and slidable in said slot.

7. Weed deflecting mechanism adapted to be mounted on the bottom of a boat or the like, said mechanism comprising a plurality of weed deflecting rods normally arranged in parallel inoperative position, supporting means for said rods, means operable from within the boat for spreading said rods into operative position, and guide means for controlling the extent of such movement.

8. Weed deflecting mechanism including a casing adapted to be mounted on the bottom of a boat or the like, said mechanism comprising a plurality of weed deflecting rods, means journaled in said casing and supporting said rods, means operable from within the boat for moving said rods from operative to inoperative position and vice-versa, and guide means for controlling the direction and extent of such movement.

9. Weed deflecting mechanism adapted to be mounted on the bottom of a boat or the like, said mechanism comprising a plurality of weed deflecting rods, supporting means for said rods, means operable from within the boat for moving said rods from operative to inoperative position and vice-versa, and a guide plate depending from the bottom of said boat and having spaced inclined slots for controlling the direction and extent of such movement of said rods.

10. In a weed deflecting apparatus of the character described, including a casing adapted to be mounted on the bottom of a boat or the like, said casing having an open end and provided at its other end with an upwardly inclined bottom and side walls, a plurality of weed deflecting rods arranged in said casing and projecting outwardly through the open end thereof, means journaled in said casing and supporting said rods, and means projecting upwardly from said casing through the bottom of said boat for raising or lowering said rods.

11. In a weed deflecting apparatus of the character described, including a casing adapted to be mounted on the bottom of a boat or the like, said casing having an open end and provided at its other end with an upwardly inclined bottom and side walls, a plurality of weed deflecting rods arranged in said casing and projecting outwardly through the open end thereof, means journaled in said casing and supporting said rods, means projecting upwardly from said casing through the bottom of said boat for raising or lowering said rods, and guide means within said casing for controlling the direction and extent of such movement of said rods.

12. In a weed deflecting apparatus of the character described, including a casing adapted to be mounted on the bottom of a boat or the like, said casing having an open end and provided at its other end with an upwardly inclined bottom and side walls, a plurality of weed deflecting rods arranged in said casing and projecting outwardly through the open end thereof, means journaled in said casing and supporting said rods, means projecting upwardly from said casing through the bottom of said boat for raising or lowering said rods, and guide means within said casing and interposed between said last mentioned means and said supporting means for controlling the direction and extent of such movement of said rods.

13. In a weed deflecting apparatus of the character described, including a casing adapted to be mounted on the bottom of a boat or the like, said casing having an open end and provided at its other end with an upwardly inclined bottom and side walls, a plurality of weed deflecting rods arranged in said casing and projecting outwardly through the open end thereof, means journaled in said casing and supporting said rods, means projecting upwardly from said casing through the bottom of said boat for raising or lowering said rods, and guide means within said casing for controlling the direction and extent of such movement of said rods, said last mentioned means including a plate having a plurality of inclined slots through which said rods pass.

14. Weed deflecting apparatus of the character described comprising a plurality of weed deflecting rods normally arranged in inoperative position, means for supporting said rods, and means for moving said rods to operative position and for simultaneously increasing the effective area covered by said rods.

15. In combination with a boat or the like,

weed deflecting mechanism mounted on the boat bottom, said mechanism comprising an expansible and contractible weed deflecting member, means for mounting said member for pivoting movement intermediate the ends thereof, means operable from the interior of the boat for actuating said deflecting member, and means disposed between said mounting means and said actuating means for expanding or contracting said member during movement thereof.

16. In a weed deflecting apparatus of the character described, including a casing adapted to be mounted on the bottom of a boat or the like, said casing having an open end and provided at its other end with an upwardly inclined bottom and side walls, a plurality of weed deflecting rods arranged in said casing and projecting outwardly through the open end thereof, means journaled in said casing and pivotally supporting said rods intermediate the ends thereof, and means projecting upwardly from said casing through the bottom of said boat for actuating said rods.

17. In a weed deflecting apparatus of the character described, including a casing adapted to be mounted on the bottom of a boat or the like, said casing having an open end and provided at its other end with an upwardly inclined bottom and side walls, a plurality of weed deflecting rods arranged in said casing and projecting outwardly through the open end thereof, a supporting member journaled in said casing and having a plurality of apertures adapted to receive said rods, means for pivoting said rods in said apertures, means projecting upwardly from said casing through the bottom of said boat for actuating said rods, and a guide plate in said casing arranged between said supporting member and said actuating means for controlling the direction and extent of movement of said rods.

18. A weed deflecting apparatus adapted to be mounted on the bottom of a boat or the like, comprising a plurality of weed deflecting rods, means for pivotally supporting said rods intermediate the ends thereof, a plate depending from the bottom of said boat and having a plurality of inclined slots adapted to receive said rods, a spindle projecting upwardly through the bottom of said boat, means at the lower end of said spindle for loosely connecting the latter to one end of said rods, and means at the upper end of said spindle for raising or lowering the latter and thereby actuating said rods, the slots in said depending plate controlling the direction and extent of movement of said rods.

19. Weed deflecting mechanism adapted to be maintained on the bottom of a boat or the like, said mechanism comprising a plurality of weed deflecting rods normally arranged in parallel inoperative position adjacent the bottom of said boat, supporting means for said rods, and means operable from within the boat for spreading said rods into operative position.

WILLIAM A. WALTHERS.