United States Patent [19]

Rava et al.

[11] **3,773,160**

[45] **Nov. 20, 1973**

[54] **OBLITERATING SIGN TYPE CARRIER FOR TYPEWRITING OR SIMILAR MACHINES**

[75] Inventors: **Sergio Rava,** Crema; **Arturo Rolfo,** Murisengo, both of Italy

[73] Assignee: **Ing. C. Olivetti & C., S.p.A,** Torino, Italy

[22] Filed: **Jan. 19, 1971**

[21] Appl. No.: **107,714**

[30] **Foreign Application Priority Data**

Jan. 21, 1970 Italy 67159 A/70

[52] **U.S. Cl.** **197/36,** 197/181, 101/398

[51] **Int. Cl.** **B41j 1/04**

[58] **Field of Search** 197/36, 37, 180, 197/181; 101/396, 397, 398, 399, 400, 401, 401.1, 401.2, 401.3, 401.4, 401.5, 401.6

[56] **References Cited**

UNITED STATES PATENTS

2,142,761	1/1939	Quinn	197/181
2,258,189	10/1941	Meisner	197/36 X
2,662,455	12/1953	Freund	101/399 X
3,006,317	10/1961	Showalter	101/401 X
3,166,008	1/1965	Lewandoski	101/397 X
3,202,257	8/1965	Rihm	197/36
1,878,516	9/1932	Heene	101/398 X
2,506,746	5/1950	Simms	101/399 X
2,317,170	4/1943	Bastow et al.	197/36
525,754	9/1894	Weaver	101/399
640,254	1/1900	Anderson	197/181 X
935,519	9/1909	Kavle	101/399
1,402,935	1/1922	Hutson et al.	101/401.1 X
1,718,921	6/1929	Freund	101/401.2 X
1,814,758	7/1931	McCarthy	101/401.1
1,905,118	4/1933	Nadell	197/181
1,961,644	6/1934	Sampson	101/399 UX

Primary Examiner—Ernest T. Wright, Jr.
Attorney—Birch, Swindler, McKie & Beckett

[57] **ABSTRACT**

A type carrier for typewriters is provided with a printing surface for printing an obliterating sign formed of an edge zone having a constant width and adjacent to the external edge of the printing surface and an inner zone. Both zones are knurled by means of parallel and equidistant grooves perpendicular to the longer edge of the printing surface.

4 Claims, 5 Drawing Figures

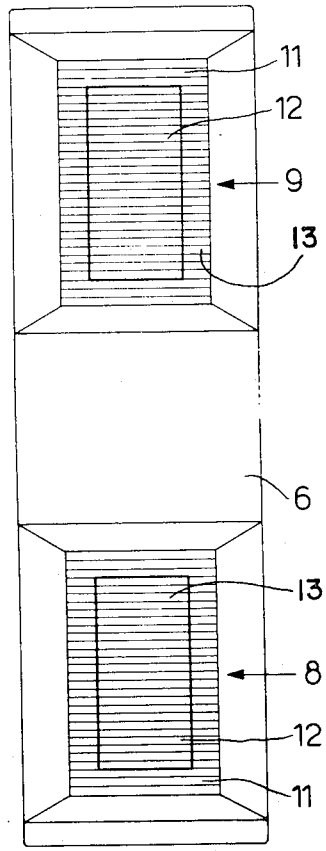

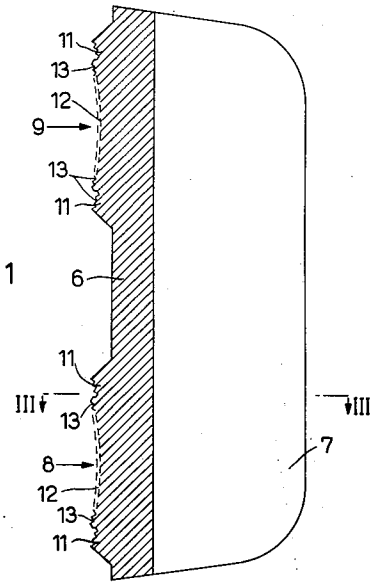

Fig. 1

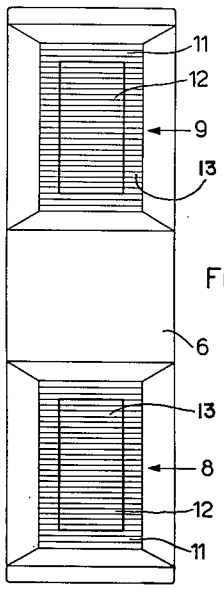

Fig. 2

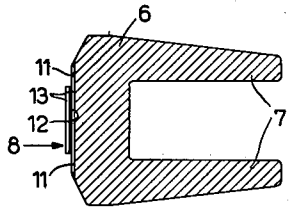

Fig. 3

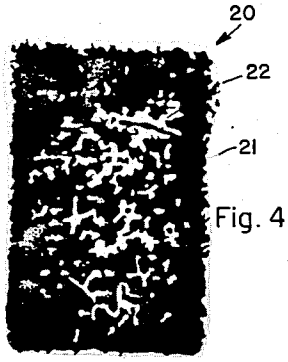

Fig. 4

PRIOR ART

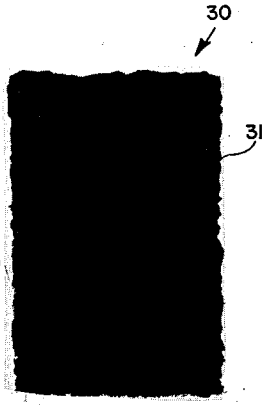

Fig. 5

INVENTORS
SERGIO RAVA
ARTURO ROLFO
BY BIRCH, SWINDLER, McKIE & BECKETT ATTORNEYS

OBLITERATING SIGN TYPE CARRIER FOR TYPEWRITING OR SIMILAR MACHINES

BACKGROUND OF THE INVENTION

1. Field of the Invention

This invention relates to a type carrier for typewriting or similar machines, particularly to type carriers for printing an obliterating sign having a relatively large printing surface.

The printing quality of a character on the paper is becoming more and more important for typewriters as well as for other kinds of office printing machines, in view of the development of the automatic character recognition, and particularly of the optical character recognition.

The apparatuses for optical character recognition require that characters to be read have both a clear edge, and a predetermined minimum coverage coefficient, that is the percentage of the surface covered by ink with respect to the entire surface of the character. Therefore both requirements indicate substantially the printing quality, which in any case improve as the portions of the sign covered by ink increase.

Where the character is formed of thin lines, a satisfactory printing quality can be reached by choosing a platen rubber having a suitable hardness, and a suitable impact force intensity, and/or by choosing the most appropriate kind of paper and ink ribbon. However, when an obliterating character is formed, thick lines or zones must be used in order to cover any type of character, for instance the boldface or extrabold characters as well as some type fonts for character recognition, and in such cases the inner portion of the sign often has large areas not covered by ink.

2. Description of the Prior Art

Present in the prior art is a type carrier for bold face printing, where the edges of each line of a character project with respect to the inner part of the printing surface. Even if this type carrier is able to print obliterating signs having satisfactory edges, it is unable to produce signs having a sufficient coverage coefficient.

It is also known to use type carriers having a printing surface generally roughened as, by striking it against sand paper or by means of other sanding treatment, in order to increase the friction coefficient thereof. Even if this provision increases to some extent the coverage coefficient, this type carrier is not able to produce a completely satisfactory printing quality, particularly in the case of characters formed of very thick lines.

SUMMARY OF THE INVENTION

The main object of the invention is to provide a type carrier for typewriting or similar machines that print by means of ink or carbon ribbon, which is capable of producing printed obliterating signs having very clear edges and a very high coverage coefficient.

According to the invention we now provide a character obliterating type carrier for typewriting or similar machines, having a relatively large printing surface, wherein the improvement comprises knurling at least a part of said printing surface to provide a set of parallel and equidistant grooves having a depth less than 0.05 mm and a pitch less than 0.05 mm.

A preferred embodiment of the invention is now described by way of example and not in a limiting sense.

DESCRIPTION OF THE DRAWING

FIG. 1 is a longitudinal section of a typewriter type carrier according to the invention, in a very enlarged scale;

FIG. 2 is a front view of the type carrier of FIG. 1;

FIG. 3 is a sectional view taken along line III—III of FIG. 1;

FIG. 4 is an enlarged view of a character printed with a conventional type carrier according to the prior art having a smooth printing surface;

FIG. 5 is a similar view of the same character printed with a type carrier having type face according to the invention.

DESCRIPTION OF THE PREFERRED EMBODIMENT

The invention is disclosed as embodied in a type carrier adapted to be mounted on a type bar of a conventional typewriter. The character to be printed is the conventional obliteration sign included in a conventional type font for optical character recognition. This sign is of a rectangular shape designed to fully cover any other character of the type font.

It is intended that the type face according to the invention can be embodied in any kind of type carrier, for instance, typewheels, type sectors, type drums, spherical type carriers, etc.

With reference to FIG. 1 of the drawing, the numeral **6** generically indicates a conventional type carrier, which is provided with a pair of wings **7** adapted to be secured, for instance by soldering, to a type bar of a typewriter, not shown in the drawing. The type carrier **6** is provided with a pair of type faces **8** and **9**, in correspondence with the lower case position and the upper case position respectively. In the embodiment now disclosed the two type faces **8** and **9** (FIG. **2**) are similar and each will present an obliterating sign **30** of a type font for optical character recognition. Each of the type faces **8** and **9** is intended to print a completely filled rectangular area, that will cover any other character erroneously printed.

As it is known, the printing surface of a conventional type is normally formed by coining a block of soft steel. The printing surface of each sign of the conventional type carrier is cylindrical and has a curving radius equal to the radius of the roll platen, where it has to impact for printing. In any case the so formed type face is normally smooth.

The printing done by a conventional smooth type face produces a sign **20**, which in an enlarged scale is substantially like that shown in FIG. **4.** It should be noted that the edge **21** of the sign **20** is very indistinct, cut out and discontinuous. Some inked portions are even completely separated from the main part of the sign **20.** Furthermore it should be noted that at a certain distance from the edges **21** of the sign **20** there are large zones **22** uncovered by the ink. It has been found that it is impossible to eliminate the uncovered zones **22** by simply changing the roller platen or the ribbon or the paper, or by increasing the intensity of the impact force.

According to the invention, type faces **8** and **9** are coined so as to form an edge zone **11** (FIG. **2**) having a constant width and an inner zone **12** surrounded by the edge zone **11.** The edge zone **11** is depressed with respect to the inner zone **12** a distance of about 0.015

mm. Therefore, the edge zone **11** appears as a rectangular frame around the inner zone **12.**

The width of the edge zone **11** is no more than one-fourth of the width of the obliterating sign **30** and corressponds to the part of the sign **20** of FIG. **4,** where the uncovered portions **22** are rather reduced or absent, whereas the inner zone **12** (FIG. **2**) corresponds to the part of the sign **20** of FIG. **4** where the uncovered portions **22** are crowded. Preferably the width of edge zone **11** (FIG. **2**) is substantially equal to one-fifth of the width of the sign **30.**

After the coining, the type carrier **6** is hardened in a known manner. Subsequently, before soldering the type carrier **6** to the type bar, (not shown) both the edge zone **11** and the inner zone **12** are knurled, for example by means of a suitable milling tool. The knurling provides a set of lines or grooves **13** (FIG. **1**) mutually parallel and equidistant. The grooves **13** are preferably perpendicular to the length of the sign **30.**

As far the size of grooves **13** is concerned, it has been found that a high printing quality can be obtained if the grooves **13** have both a depth and a pitch less than 0.05 mm. In the present case, shown in the drawing, the grooves **13** have a depth of about 0.01 mm and a pitch of 0.015 mm.

The so knurled type faces **8** or **9** when tested under the same conditions as the prior art device which produced sign **20,** produced a sign **20** which in an enlarged scale is shown in FIG. **5.** It should be noted that the edges **31** of the sign **30** are much more distinct than edges **21** of sign **20** and that no uncovered portions **22** are produced. It should also be noted that a very high uniformity of coverage by ink, or colour intensity, between the peripheral portion and the central portion of the sign **30,** has been obtained. Therefore, an apparatus for optical character recognition cannot recognize the character obliterated by the sign **30** of FIG. **5.**

It is intended that modification and improvement can be made to the described type faces **8** and **9** without departing from the scope of the invention.

What we claim is:

1. A character obliterating type carrier for optical character recognition typewriting or similar machines that print on a paper sheet by striking an ink ribbon, said type carrier having a substantially rectangular printing surface for fully covering with ink any other previously printed character, wherein the improvement comprises:

a. an edge zone of constant width adjacent to and inside the entire perimeter of said printing surface, said edge zone lying in a first plane,

b. an inner zone surrounded by said edge zone, said inner zone lying in a second plane spaced from said first plane a constant distance so that said edge zone is depressed with respect to said inner zone by said constant distance around the entire perimeter of said inner zone,

c. a set of similar grooves mutually equidistant from one another provided on both said edge zone and said inner zone, said grooves being parallel to the shortest side of said rectangular printing surface.

2. A type carrier according to claim **1,** wherein said equidistant grooves have a depth and a pitch both less than 0.05 mm.

3. A type carrier according to claim **1,** wherein said equidistant grooves have a depth of substantially 0.01 mm and a pitch of substantially 0.015 mm.

4. A type carrier according to claim **1,** wherein the width of said edge zone is more than the depth of said grooves and less than one-fourth of the width of said printing surface.

* * * * *