(12) INTERNATIONAL APPLICATION PUBLISHED UNDER THE PATENT COOPERATION TREATY (PCT)

(19) World Intellectual Property Organization
International Bureau

(43) International Publication Date
7 March 2013 (07.03.2013)

WIPO | PCT

(10) International Publication Number
WO 2013/029165 A1

(51) International Patent Classification:
B62D 55/00 (2006.01) *E02F 9/16* (2006.01)

(21) International Application Number:
PCT/CA2012/000815

(22) International Filing Date:
30 August 2012 (30.08.2012)

(25) Filing Language: English

(26) Publication Language: English

(30) Priority Data:
61/529,639 31 August 2011 (31.08.2011) US
61/542,551 3 October 2011 (03.10.2011) US

(71) Applicant *(for all designated States except US)*: **ROLIC INVEST SARL** [LU/LU]; 41, Boulevard Henri, L-1724 Luxembourg (LU).

(72) Inventors; and
(75) Inventors/Applicants *(for US only)*: **STEBEN, Eric** [CA/CA]; 723 Dunlavey, Bromont, Québec J2L 0J5 (CA). **MARLEAU, Benoît** [CA/CA]; 1280 Sainte-Catherine, St-Hyacinthe, Québec J2S 5Z4 (CA).

(74) Agent: **SMART & BIGGAR**; 1000 de la Gauchetière Street West, Suite 3300, Montréal, Québec H3B 4W5 (CA).

(81) Designated States *(unless otherwise indicated, for every kind of national protection available)*: AE, AG, AL, AM, AO, AT, AU, AZ, BA, BB, BG, BH, BN, BR, BW, BY, BZ, CA, CH, CL, CN, CO, CR, CU, CZ, DE, DK, DM, DO, DZ, EC, EE, EG, ES, FI, GB, GD, GE, GH, GM, GT, HN, HR, HU, ID, IL, IN, IS, JP, KE, KG, KM, KN, KP, KR, KZ, LA, LC, LK, LR, LS, LT, LU, LY, MA, MD, ME, MG, MK, MN, MW, MX, MY, MZ, NA, NG, NI, NO, NZ, OM, PE, PG, PH, PL, PT, QA, RO, RS, RU, RW, SC, SD, SE, SG, SK, SL, SM, ST, SV, SY, TH, TJ, TM, TN, TR, TT, TZ, UA, UG, US, UZ, VC, VN, ZA, ZM, ZW.

(84) Designated States *(unless otherwise indicated, for every kind of regional protection available)*: ARIPO (BW, GH, GM, KE, LR, LS, MW, MZ, NA, RW, SD, SL, SZ, TZ, UG, ZM, ZW), Eurasian (AM, AZ, BY, KG, KZ, RU, TJ, TM), European (AL, AT, BE, BG, CH, CY, CZ, DE, DK, EE, ES, FI, FR, GB, GR, HR, HU, IE, IS, IT, LT, LU, LV, MC, MK, MT, NL, NO, PL, PT, RO, RS, SE, SI, SK, SM, TR), OAPI (BF, BJ, CF, CG, CI, CM, GA, GN, GQ, GW, ML, MR, NE, SN, TD, TG).

Published:

— *with international search report (Art. 21(3))*

— *before the expiration of the time limit for amending the claims and to be republished in the event of receipt of amendments (Rule 48.2(h))*

(54) **Title**: TRACKED VEHICLE

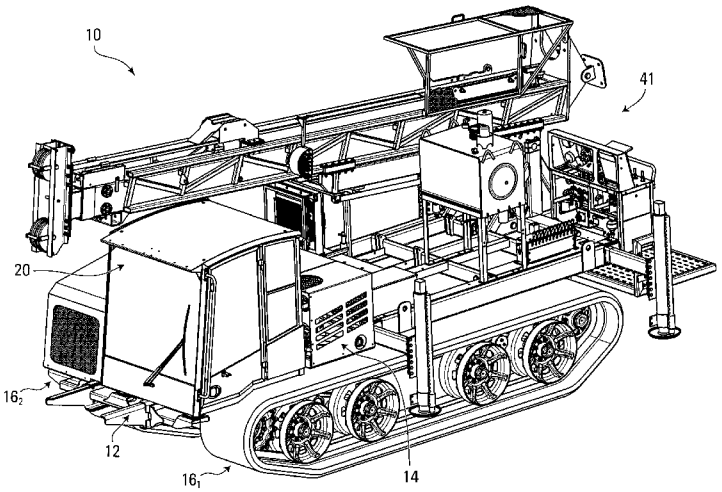

FIG. 1

(57) **Abstract**: A tracked vehicle, such as tracked carrier to carry and enable use of work equipment (e.g., a crane, an aerial work platform, a drill rig, etc.) on various terrains, is provided. The tracked vehicle may comprise a frame comprising an equipment mounting area for mounting work equipment above the frame. The frame may comprise a pair of side rails that have a spacing in a widthwise direction of the tracked vehicle which corresponds to a standard truck frame side rail spacing (e.g., 34 inches). An operator cabin comprises a seating area which may comprise a single seat for an operator or a first seat for the operator and a second seat for a second person next to the operator. At least part of a power plant of the tracked vehicle may be mounted above the frame and behind the operator cabin. The tracked vehicle comprises a plurality of track assemblies for traction of the tracked vehicle.

WO 2013/029165 A1

TRACKED VEHICLE

CROSS-REFERENCE TO RELATED APPLICATIONS

This application claims priority from U.S. Provisional Patent Application No. 61/529,639 filed on August 31, 2011 and U.S. Provisional Patent Application No. 61/542,551 filed on October 3, 2011, both of which are hereby incorporated by reference herein.

FIELD OF THE INVENTION

The invention relates to tracked vehicles designed to travel on various terrains, including rugged terrain, and, in particular, to tracked utility vehicles carrying work equipment.

BACKGROUND

One type of tracked vehicle is a tracked utility vehicle, sometimes referred to as a "tracked carrier" or "tracked equipment carrier" vehicle, which carries and enables use of work equipment, such as a crane, an aerial device, a drill rig, a digger derrick, and/or any other industrial apparatus, on various terrains, including rugged terrain (e.g., with mud, steep hills, swamps, rocks, mud, and/or snow).

It is often desirable for a tracked utility vehicle to have a carrying capacity as large as possible but yet be sized such that the vehicle can fit a public road infrastructure. For example, it may be desirable that the vehicle be low enough to fit below an underpass or otherwise respect a vehicle height limit of the public road infrastructure (e.g., when transported on a truck's deck trailer). This typically imposes certain limitations on components of the vehicle. For instance, this may

limit a size of an operator cabin of the vehicle, to avoid interference with the work equipment carried by the vehicle.

The work equipment carried by a tracked utility vehicle is normally mounted to the vehicle's frame. This can often present issues or challenges. For example, the work equipment is often designed to be installed on a truck's frame. Since the tracked utility vehicle's frame is typically very different from a truck's frame, the work equipment cannot be mounted as readily to the tracked utility vehicle's frame than to a truck's frame. Rather, modifications may have to be made to the work equipment and/or to the tracked utility vehicle to allow the work equipment to be installed on the tracked utility vehicle's frame. For instance, in some cases, an intermediate support structure may need to be installed between the work equipment and the tracked utility vehicle's frame to support and anchor the work equipment.

Each track assembly of a tracked utility vehicle comprises an endless track disposed around a set of wheels and engaging the ground to generate traction. Installing the endless track around the set of wheels can sometimes be difficult. For instance, in some case, the endless track's inner side may have guide projections which may interfere with some of the wheels during installation of the track around the set of wheels. Also, tension in the endless track may be maintained by an independent tensioner (e.g., a hydraulic accumulator and cylinder or a spring-loaded actuator) which may cause certain issues (e.g., difficulties in maintaining constant tension over displacement of the cylinder or actuator).

Challenges similar to those discussed above in respect of a tracked utility vehicle may be encountered in other types of industrial tracked vehicles.

Accordingly, there is a need for improvements in tracked utility vehicles and other tracked vehicles.

SUMMARY OF THE INVENTION

In accordance with an aspect of the invention, there is provided a tracked vehicle. The tracked vehicle comprises a chassis comprising a frame extending along a longitudinal direction of the tracked vehicle. The frame comprises an equipment mounting area for mounting work equipment above the frame. The tracked vehicle comprises an operator cabin mounted to the frame. The tracked vehicle also comprises a power plant mounted to the frame and comprising a prime mover. At least part of the power plant is mounted above the frame and behind the operator cabin. The tracked vehicle comprises a plurality of track assemblies for traction of the tracked vehicle. A first one of the track assemblies is on a first lateral side of the tracked vehicle and a second one of the track assemblies is on a second lateral side of the tracked vehicle. Each track assembly of the plurality of track assemblies is mounted to the frame and comprises: (i) a plurality of wheels including: a drive wheel; an end wheel spaced apart from the drive wheel in the longitudinal direction of the tracked vehicle; and a plurality of support wheels arranged in an inline configuration between the drive wheel and the end wheel; and (ii) an endless track disposed around the plurality of wheels for engaging the ground. The endless track comprises a top run extending between the drive wheel and the end wheel over the support wheels and a ground-engaging bottom run extending under the support wheels. The drive wheel is in driving engagement with the endless track to impart motion to the endless track.

In accordance with another aspect of the invention, there is provided a tracked vehicle. The tracked vehicle comprises a chassis comprising a frame extending along a longitudinal direction of the tracked vehicle. The frame comprises an equipment mounting area for mounting work equipment above the frame. The tracked vehicle comprises an operator cabin mounted to the frame. The operator cabin comprises a seating area for allowing an operator to sit. The seating area

defines a first seat position and a second seat position along a widthwise direction of the tracked vehicle. The tracked vehicle also comprises a power plant mounted to the frame and comprising a prime mover. The tracked vehicle comprises a plurality of track assemblies for traction of the tracked vehicle. A first one of the track assemblies is on a first lateral side of the tracked vehicle and a second one of the track assemblies is on a second lateral side of the tracked vehicle. Each track assembly of the plurality of track assemblies is mounted to the frame and comprises: (i) a plurality of wheels including: a drive wheel; an end wheel spaced apart from the drive wheel in the longitudinal direction of the tracked vehicle; and a plurality of support wheels arranged in an inline configuration between the drive wheel and the end wheel; and (ii) an endless track disposed around the plurality of wheels for engaging the ground. The endless track comprises a top run extending between the drive wheel and the end wheel over the support wheels and a ground-engaging bottom run extending under the support wheels. The drive wheel is in driving engagement with the endless track to impart motion to the endless track. The tracked vehicle, with the work equipment mounted to the frame, respects a vehicle height limit for travel on a public road infrastructure.

In accordance with another aspect of the invention, there is provided a tracked vehicle. The tracked vehicle comprises a chassis comprising a frame extending along a longitudinal direction of the tracked vehicle. The frame comprises an equipment mounting area for mounting work equipment above the frame. The tracked vehicle comprises an operator cabin mounted to the frame. The operator cabin comprises a first seat for allowing an operator to sit and a second seat for allowing a second person to sit next to the operator in a widthwise direction of the tracked vehicle. The tracked vehicle also comprises a power plant mounted to the frame and comprising a prime mover. The tracked vehicle comprises a plurality of track assemblies for traction of the tracked vehicle. A first one of the track assemblies is on a first lateral side of the tracked vehicle and a second one of the track assemblies is on a second lateral side of the tracked vehicle. Each

track assembly of the plurality of track assemblies is mounted to the frame and comprises: (i) a plurality of wheels including: a drive wheel; an end wheel spaced apart from the drive wheel in the longitudinal direction of the tracked vehicle; and a plurality of support wheels arranged in an inline configuration between the drive wheel and the end wheel; and (ii) an endless track disposed around the plurality of wheels for engaging the ground. The endless track comprises a top run extending between the drive wheel and the end wheel over the support wheels and a ground-engaging bottom run extending under the support wheels. The drive wheel is in driving engagement with the endless track to impart motion to the endless track.

In accordance with another aspect of the invention, there is provided a tracked vehicle. The tracked vehicle comprises a chassis comprising a frame extending along a longitudinal direction of the tracked vehicle. The frame comprises an equipment mounting area for mounting work equipment above the frame. The tracked vehicle comprises an operator cabin mounted to the frame. The operator cabin comprises a seating area for allowing an operator to sit. The seating area defines a first seat position and a second seat position along a widthwise direction of the tracked vehicle. The operator cabin comprises a roof defining a height of the tracked vehicle. The height of the tracked vehicle is no more than 2.8 m. The tracked vehicle also comprises a power plant mounted to the frame and comprising a prime mover. The tracked vehicle comprises a plurality of track assemblies for traction of the tracked vehicle. A first one of the track assemblies is on a first lateral side of the tracked vehicle and a second one of the track assemblies is on a second lateral side of the tracked vehicle. Each track assembly of the plurality of track assemblies is mounted to the frame and comprises: (i) a plurality of wheels including: a drive wheel; an end wheel spaced apart from the drive wheel in the longitudinal direction of the tracked vehicle; and a plurality of support wheels arranged in an inline configuration between the drive wheel and the end wheel; and (ii) an endless track disposed around the plurality of wheels for engaging the ground. The endless track comprises a top run

extending between the drive wheel and the end wheel over the support wheels and a ground-engaging bottom run extending under the support wheels. The drive wheel is in driving engagement with the endless track to impart motion to the endless track.

In accordance with another aspect of the invention, there is provided a tracked vehicle. The tracked vehicle comprises a chassis comprising a frame extending along a longitudinal direction of the tracked vehicle. The frame comprises an equipment mounting area for mounting work equipment above the frame. The tracked vehicle comprises an operator cabin mounted to the frame. The operator cabin comprises a seating area for allowing an operator to sit and a user interface for enabling the operator to control the tracked vehicle. The user interface comprises an accelerator for controlling a speed of the tracked vehicle and a steering device for steering the tracked vehicle. The operator cabin is configurable in a plurality of cabin configurations including: a first cabin configuration in which the operator sits in a first seat position of the seating area along a widthwise direction of the tracked vehicle and the steering device is in a first steering device position along the widthwise direction of the tracked vehicle; and a second cabin configuration in which the operator sits in a second seat position of the seating area along the widthwise direction of the tracked vehicle and the steering device is in a second steering device position along the widthwise direction of the tracked vehicle. The tracked vehicle also comprises a power plant mounted to the frame and comprising a prime mover. The tracked vehicle comprises a plurality of track assemblies for traction of the tracked vehicle. A first one of the track assemblies is on a first lateral side of the tracked vehicle and a second one of the track assemblies is on a second lateral side of the tracked vehicle. Each track assembly of the plurality of track assemblies is mounted to the frame and comprises: (i) a plurality of wheels including: a drive wheel; an end wheel spaced apart from the drive wheel in the longitudinal direction of the tracked vehicle; and a plurality of support wheels arranged in an inline configuration between the drive wheel and the end wheel; and (ii) an

endless track disposed around the plurality of wheels for engaging the ground. The endless track comprises a top run extending between the drive wheel and the end wheel over the support wheels and a ground-engaging bottom run extending under the support wheels. The drive wheel is in driving engagement with the endless track to impart motion to the endless track.

In accordance with another aspect of the invention, there is provided a tracked vehicle. The tracked vehicle comprises a chassis comprising a frame extending along a longitudinal direction of the tracked vehicle. The frame comprises an equipment mounting area for mounting work equipment above the frame. The tracked vehicle comprises an operator cabin mounted to the frame. The operator cabin comprises a seating area for allowing an operator to sit and a user interface for enabling the operator to control the tracked vehicle. The user interface comprises an accelerator for controlling a speed of the tracked vehicle and a steering device for steering the tracked vehicle. The operator cabin is configurable in a plurality of cabin configurations including: a first cabin configuration in which the operator sits in a first seat position of the seating area along a widthwise direction of the tracked vehicle and the steering device is in a first steering device position along the widthwise direction of the tracked vehicle; and a second cabin configuration in which the operator sits in a second seat position of the seating area along the widthwise direction of the tracked vehicle and the steering device is in a second steering device position along the widthwise direction of the tracked vehicle. The tracked vehicle also comprises a power plant mounted to the frame and comprising a prime mover. The tracked vehicle comprises a plurality of track assemblies for traction of the tracked vehicle. A first one of the track assemblies is on a first lateral side of the tracked vehicle and a second one of the track assemblies is on a second lateral side of the tracked vehicle. Each track assembly of the plurality of track assemblies is mounted to the frame and comprises a plurality of wheels including: a drive wheel; an end wheel spaced apart from the drive wheel in the longitudinal direction of the tracked vehicle; and a plurality of support wheels arranged in an

inline configuration between the drive wheel and the end wheel. Each support wheel occupies a majority of a height of the track assembly and comprises a first support wheel member rotatable on an axle of the support wheel and having a circumference of the support wheel and a second support wheel member rotatable on the axle of the support wheel and having the circumference of the support wheel. The second support wheel member is installable in and removable from the track assembly separately from the first support wheel member. The track assembly also comprises an endless track disposed around the plurality of wheels for engaging the ground. The endless track comprises a top run extending between the drive wheel and the end wheel over the support wheels and a ground-engaging bottom run extending under the support wheels. The drive wheel is in driving engagement with the endless track to impart motion to the endless track.

In accordance with another aspect of the invention, there is provided a tracked vehicle. The tracked vehicle comprises a chassis comprising a frame extending along a longitudinal direction of the tracked vehicle. The frame comprises a pair of side rails spaced apart in a widthwise direction of the tracked vehicle for mounting work equipment carried by the tracked vehicle to the side rails. A spacing of the side rails in the widthwise direction of the tracked vehicle corresponds to a standard truck frame side rail spacing. The tracked vehicle comprises an operator cabin mounted to the frame. The tracked vehicle also comprises a power plant mounted to the frame and comprising a prime mover. The tracked vehicle comprises a plurality of track assemblies for traction of the tracked vehicle. A first one of the track assemblies is on a first lateral side of the tracked vehicle and a second one of the track assemblies is on a second lateral side of the tracked vehicle. Each track assembly of the plurality of track assemblies is mounted to the frame and comprises: (i) a plurality of wheels including: a drive wheel; an end wheel spaced apart from the drive wheel in the longitudinal direction of the tracked vehicle; and a plurality of support wheels arranged in an inline configuration between the drive wheel and the end wheel;

and (ii) an endless track disposed around the plurality of wheels for engaging the ground. The endless track comprises a top run extending between the drive wheel and the end wheel over the support wheels and a ground-engaging bottom run extending under the support wheels. The drive wheel is in driving engagement with the endless track to impart motion to the endless track.

In accordance with another aspect of the invention, there is provided a tracked vehicle. The tracked vehicle comprises a chassis comprising a frame extending along a longitudinal direction of the tracked vehicle. The frame comprises a pair of side rails spaced apart in a widthwise direction of the tracked vehicle for mounting work equipment carried by the tracked vehicle to the side rails. A spacing of the side rails in the widthwise direction of the tracked vehicle being no greater than 34 inches. The tracked vehicle also comprises a power plant mounted to the frame and comprising a prime mover. The tracked vehicle comprises an operator cabin mounted to the frame. The tracked vehicle comprises a plurality of track assemblies for traction of the tracked vehicle. A first one of the track assemblies is on a first lateral side of the tracked vehicle and a second one of the track assemblies is on a second lateral side of the tracked vehicle. Each track assembly of the plurality of track assemblies is mounted to the frame and comprises: (i) a plurality of wheels including: a drive wheel; an end wheel spaced apart from the drive wheel in the longitudinal direction of the tracked vehicle; and a plurality of support wheels arranged in an inline configuration between the drive wheel and the end wheel; and (ii) an endless track disposed around the plurality of wheels for engaging the ground. The endless track comprises a top run extending between the drive wheel and the end wheel over the support wheels and a ground-engaging bottom run extending under the support wheels. The drive wheel is in driving engagement with the endless track to impart motion to the endless track.

In accordance with another aspect of the invention, there is provided a tracked vehicle. The tracked vehicle comprises a chassis comprising a frame extending

along a longitudinal direction of the tracked vehicle. The frame comprises an upper frame structure including a pair of side rails spaced apart in a widthwise direction of the tracked vehicle for mounting work equipment carried by the tracked vehicle to the side rails. The frame also comprises a lower frame structure below the upper frame structure. The frame defines a vertical gap between the upper frame structure and the lower frame structure. The tracked vehicle also comprises a power plant mounted to the frame and comprising a prime mover. The tracked vehicle comprises an operator cabin mounted to the frame. The tracked vehicle comprises a plurality of track assemblies for traction of the tracked vehicle. A first one of the track assemblies is on a first lateral side of the tracked vehicle and a second one of the track assemblies is on a second lateral side of the tracked vehicle. Each track assembly of the plurality of track assemblies is mounted to the frame and comprises: (i) a plurality of wheels including: a drive wheel; an end wheel spaced apart from the drive wheel in the longitudinal direction of the tracked vehicle; and a plurality of support wheels arranged in an inline configuration between the drive wheel and the end wheel; and (ii) an endless track disposed around the plurality of wheels for engaging the ground. The endless track comprises a top run extending between the drive wheel and the end wheel over the support wheels and a ground-engaging bottom run extending under the support wheels. The drive wheel is in driving engagement with the endless track to impart motion to the endless track.

In accordance with another aspect of the invention, there is provided a tracked vehicle. The tracked vehicle comprises a chassis comprising a frame extending along a longitudinal direction of the tracked vehicle. The tracked vehicle also comprises a power plant mounted to the frame and comprising a prime mover and a hydraulic drive system connected to the prime mover. The tracked vehicle comprises an operator cabin mounted to the frame. The tracked vehicle comprises a plurality of track assemblies for traction of the tracked vehicle. A first one of the track assemblies is on a first lateral side of the tracked vehicle and a second one of the track assemblies is on a second lateral side of the tracked

vehicle. Each track assembly of the plurality of track assemblies is mounted to the frame and comprises: (i) a plurality of wheels including: a drive wheel; an end wheel spaced apart from the drive wheel in the longitudinal direction of the tracked vehicle; and a plurality of support wheels arranged in an inline configuration between the drive wheel and the end wheel; (ii) an endless track disposed around the plurality of wheels for engaging the ground; and iii) a track tensioner for maintaining tension in the endless track. The track tensioner comprises a hydraulic actuator hydraulically connected to the hydraulic drive system. The endless track comprises a top run extending between the drive wheel and the end wheel over the support wheels and a ground-engaging bottom run extending under the support wheels. The drive wheel is in driving engagement with the endless track to impart motion to the endless track.

In accordance with another aspect of the invention, there is provided a tracked vehicle. The tracked vehicle comprises a chassis comprising a frame extending along a longitudinal direction of the tracked vehicle. The tracked vehicle also comprises a power plant mounted to the frame and comprising a prime mover. The tracked vehicle comprises a plurality of track assemblies for traction of the tracked vehicle. A first one of the track assemblies is on a first lateral side of the tracked vehicle and a second one of the track assemblies is on a second lateral side of the tracked vehicle. Each track assembly of the plurality of track assemblies is mounted to the frame and comprises a plurality of wheels including: a drive wheel; a rear wheel spaced apart from the drive wheel in the longitudinal direction of the tracked vehicle; and a plurality of support wheels arranged in an inline configuration between the drive wheel and the end wheel. The rear wheel and a rearmost one of the support wheels overlap in the longitudinal direction of the tracked vehicle. The track assembly also comprises an endless track disposed around the plurality of wheels for engaging the ground. The endless track comprises a top run extending between the drive wheel and the end wheel over the support wheels and a ground-engaging bottom

run extending under the support wheels. The drive wheel is in driving engagement with the endless track to impart motion to the endless track.

These and other aspects of the invention will now become apparent to those of ordinary skill in the art upon review of the following description of embodiments of the invention in conjunction with the accompanying drawings.

BRIEF DESCRIPTION OF THE DRAWINGS

A detailed description of embodiments of the invention is provided below, by way of example only, with reference to the accompanying drawings, in which:

- Figures 1 to 6 show a first perspective view, a second perspective view, a side view, a front view, a rear view, and a top view of an example of a tracked vehicle equipped with work equipment in accordance with an embodiment of the invention;
- Figures 7 to 13 show a first perspective view, a second perspective view, a side view, a front view, a rear view, a top view, and a bottom view of the tracked vehicle without the work equipment;
- Figures 14 to 18 show a perspective view, a side view, a top view, a front view, and a rear view of a chassis including a frame and track assemblies of the tracked vehicle;
- Figures 19 to 25 show a perspective view, a side view, a top view, a bottom view, a front view, a rear view, and a cross-sectional view of the frame and the track assemblies without endless tracks of the track assemblies;
- Figures 26 to 28 show examples of attachment devices which secure the work equipment to the frame of the tracked vehicle;
- Figures 29 and 30 show a top view of an inner side, and a cross-sectional view, of an endless track in accordance with an embodiment of the invention;

- Figures 31 and 32 show a perspective view of a ground-engaging outer side, and a perspective view of an inner side, of an endless track in accordance with another embodiment of the invention;
- Figures 33 and 34 show front and rear perspective views of a power plant of the tracked vehicle with panels of a housing of the power plant removed;
- Figures 35 and 36 show cross-sectional views of a support wheel of a track assembly with and without the endless track;
- Figures 37 and 38 show a perspective view and a cross-sectional view of a track tensioner in relation to wheels of a track assembly;
- Figures 39 and 40 show a perspective view and a cross-sectional view of a support wheel of a track assembly in accordance with another embodiment of the invention;
- Figure 41 shows an operator cabin of the tracked vehicle configured in a one-person configuration;
- Figure 42 shows the operator cabin in the one-person configuration with a seat and components of a user interface removed;
- Figure 43 shows the operator cabin configured in a two-person configuration;
- Figure 44 shows the operator cabin in the two-person configuration with seats and components of the user interface removed;
- Figure 45 shows components of the user interface connected to other components of the tracked vehicle;
- Figure 46 shows a seat support and part of a user interface support of the operator cabin;
- Figure 47 shows the seat support and the user interface support of the operator cabin; and
- Figures 48 to 50 show track tensioners of the track assemblies hydraulically connected to a hydraulic drive system of the tracked vehicle.

In the drawings, embodiments of the invention are illustrated by way of example. It is to be expressly understood that the description and drawings are only for the purpose of illustrating certain embodiments of the invention and are an aid for understanding. They are not intended to be a definition of the limits of the invention.

DETAILED DESCRIPTION OF EMBODIMENTS

Figures 1 to 13 show an example of a tracked utility vehicle 10 in accordance with an embodiment of the invention. The tracked utility vehicle 10 is designed to carry and enable use of work equipment 41, which includes one or more work implements such as, for example, a crane, a ladder, an aerial device, an aerial work platform, a lift, a drill rig, a digger derrick, a material handler, and/or any other industrial apparatus, on various terrains, including rugged terrain (e.g., with mud, steep hills, swamps, rocks, mud, and/or snow). This type of vehicle can sometimes be referred to as a "tracked carrier" or "tracked equipment carrier" vehicle.

The tracked utility vehicle 10 has a length L_v, a width W_v, and a height H_v (measured without taking into account the work equipment 41). These dimensions may allow the vehicle 10 to have a large payload capacity while being able to be used in a public road infrastructure. For example, in some embodiments, the length L_v may be at least 5 m, such as between 5 m and 10 m, in some cases between 6 m and 9 m, and in some cases between 7 m and 8 m; the width W_v may be at least 2 m, such as between 2 m and 5 m, in some cases between 2.5 m and 4.5 m, and in some cases between 3 m and 4 m; and the height H_v may be no more than 4 m, in some cases no more than 3.5 m, and in some cases no more than 3 m. The length L_v, width W_v, and height H_v may take on various other values in other embodiments.

The tracked utility vehicle 10 has a payload capacity which can be quite large. For example, in some embodiments, the payload capacity of the vehicle 10 may be at least 10000 lbs (about 4536 kg), in some cases at least 15000 lbs (about 6804 kg), in some cases at least 20000 lbs (about 9072 kg), in some cases at least 30000 lbs (about 13608 kg), and in some cases at least 40000 lbs (18144 kg). The payload capacity may take on various other values in other embodiments.

In this embodiment, the tracked utility vehicle 10 comprises a chassis 12, a power plant 14, a plurality of track assemblies 16_1, 16_2, and an operator cabin 20. The vehicle 10 has a longitudinal axis 59 defining a longitudinal direction of the vehicle 10 (i.e., a direction generally parallel to its longitudinal axis 59) and transversal directions (i.e., directions transverse to its longitudinal axis 59), including a widthwise direction (i.e., a lateral direction generally perpendicular to its longitudinal axis 59). The vehicle 10 also has a height direction which is normal to both its longitudinal direction and its widthwise direction.

a) Power plant

The power plant 14 generates power to move the tracked utility vehicle 10. To that end, the power plant 14 comprises a prime mover 17. For example, the prime mover 17 may comprise an internal combustion engine and/or one or more other types of motors (e.g., electric motors, etc.) for generating motive power to move the vehicle 10.

The power plant 14 is in a driving relationship with each of the track assemblies 16_1, 16_2. That is, power derived from the power plant 14 is transmitted to each of the track assemblies 16_1, 16_2 in order to drive the track assemblies 16_1, 16_2. In this embodiment, with additional reference to Figure 33, power from the power plant 14 is transmitted to the track assemblies 16_1, 16_2 via a hydraulic drive system 21. For instance, in this example, the hydraulic drive system 21

comprises, for each of the track assemblies 16_1, 16_2, a hydraulic pump 26 driven by the prime mover 17 and connected to a hydraulic motor (not shown) which drives that track assembly. Power from the power plant 14 may be transmitted to the track assemblies 16_1, 16_2 in various other ways in other embodiments.

In this embodiment, the power plant 14 includes a housing 46 which houses the prime mover 17 and other components of the power plant 14. More particularly, in this embodiment, the housing 46 houses: hydraulic components including each hydraulic pump 26 of the hydraulic drive system 21 and a hydraulic fluid reservoir; a cooling system for cooling the prime mover 17 and hydraulic fluid of the hydraulic drive system 21; batteries; components of an exhaust system; pipes; and cables. Other components of the power plant 14 may be housed in the housing 46 in other embodiments.

The housing 46 and the components of the power plant 14 that it houses are mounted on top of the chassis 12. More particularly, in this embodiment, the housing 46 comprises a back housing portion 47_1 which houses a first portion of the power plant 14 and is located above the chassis 12 behind the operator cabin 20 and a side housing portion 47_2 which houses a second portion of the power plant 14 and is located above the chassis 12 on a right side of the operator cabin 20. Thus, in this embodiment, the housing 46 has a generally L-shaped configuration that extends behind and next to the operator cabin 20, with the back housing portion 47_1 being elongated in the widthwise direction of the vehicle 10 and the side housing portion 47_2 being elongated in the longitudinal direction of the vehicle 10.

Mounting of the housing 46 and the components of the power plant 14 that it houses above the chassis 12 may facilitate installation and servicing of the power plant 14. For example, maintenance or other servicing activities may be performed by accessing components of the power plant 14 without being obstructed by the work equipment 41.

Also, components of the power plant 14, including the prime mover 17, the hydraulic pumps of the hydraulic drive system 21, and the housing 46, may secured to one another to constitute a "power plant module" that can be installed on and removable from the chassis 12 together as a unit. This may allow the tracked utility vehicle 10 to be easily equipped with a particular one of a plurality of different power plant modules during manufacturing of the vehicle 10 depending on an application or environment in which the vehicle 10 will be used. For example, in some embodiments, the plurality of different power plant modules may comprise different types of prime movers. For instance, in some cases, the different types of prime movers may be different types of internal combustion engines, such as different types of engines that conform to requirements of different engine tiers (e.g., an engine conforming to requirements of a T3 engine tier and an engine conforming to requirements of a T4 engine tier). In such examples of implementation, a controller controlling the prime mover 17 (e.g., an engine control unit (ECU) may comprise software that can control the different types of engines and receives an input indicating a particular type of engine to which the prime mover 17 corresponds to control it accordingly.

Furthermore, mounting of the housing 46 and the components of the power plant 14 that it houses above the chassis 12 may allow the height H_v of the tracked utility vehicle 10 to be kept small. This may be beneficial in various cases.

For example, in this embodiment, the operator cabin 20 can seat two individuals (i.e., can comprise two seats) as further discussed later on, and the tracked utility vehicle 10 carrying the work equipment 41 can travel on a public road infrastructure. The vehicle 10 may travel on the public road infrastructure by self-propulsion or by being transported on another vehicle (e.g., on a flatbed truck). The vehicle 10 may therefore respect a vehicle height limit (i.e., a maximum vehicle height allowable) for travel on the public road infrastructure. The vehicle height limit is normally set by a government responsible for the public road

infrastructure. For example, in some cases, the vehicle height limit for travel on the public road infrastructure may be between 13.5 feet (4.1 m) and 14 feet (4.3 m). The vehicle height limit for travel on the public road infrastructure may have any other suitable value in other cases. An overall height H_{v-o} of the vehicle 10, measured with the work equipment 41 in a retracted nonworking state, may thus be designed taking into account the vehicle height limit and a height of a trailer on which the vehicle 10 may be transported on the public road infrastructure. For example, if a trailer having a height of 24 inches is expected to be used for transporting the vehicle 10, the overall height H_{v-o} of the vehicle 10 may be no more than 11.5 feet (3.5 m) if the vehicle height limit is 13.5 feet or no more than 12 feet (3.7 m) if the vehicle height limit is 14 feet. As another example, if a trailer having a height of 18 inches is expected to be used for transporting the vehicle 10, the overall height H_{v-o} of the vehicle 10 may be no more than 12 feet if the vehicle height limit is 13.5 feet or no more than 12.5 feet if the vehicle height limit is 14 feet. Thus, in various examples, the overall height H_{v-o} of the vehicle 10 may be no more than 12.5 feet, in some cases no more than 12 feet, and in some cases no more than 11.5 feet.

More particularly, in this embodiment, when the work equipment 41 is in a retracted nonworking state (i.e., a state in which it is retracted onto the vehicle 10 and not performing any work operation, as opposed to an extended working state in which it is extended outwardly from the vehicle 10 to perform a work operation), the work equipment 41 is arranged such that it extends frontward in the longitudinal direction of the vehicle 10 beyond a rear side 114 of the operator cabin 20. In this example of implementation, the work equipment 41 extends frontward in the longitudinal direction of the vehicle 10 beyond a front side 112 of the operator cabin 20, next to a right side 116_2 of the operator cabin 20, above the side housing portion 47_2. The work equipment 41 also extends above a roof 118 of the operator cabin 20. Mounting part of the power plant 14, including the prime mover 17, on top of the chassis 12 and behind the operator cabin 20 (e.g., as opposed to within an internal space or "tub" defined by the chassis 12) allows

the operator cabin 20, which can comprise two seats, to be low enough for installing the work equipment 41 in this manner. For example, in some embodiments, the height H_v of the vehicle 10 to the roof 118 of the operator cabin 20 may be no more than 2.8 m, in some cases no more than 2.7 m, and in some cases no more than 2.6 m. For instance, in this embodiment, the height H_v of the vehicle 10 may be about 2.5 m.

As another example, the tracked utility vehicle 10, without the work equipment 41 installed thereon, may fit in a closed shipping container for transport (e.g., overseas). For instance, in some examples, a maximum height for a shipping container may be no more than 3 m, in some cases no more than 2.8 m, and in some cases no more than 2.6 m, and the vehicle 10 may fit in that shipping container.

As yet another example, keeping the height H_v of the tracked utility vehicle 10 small may permit a vertical distance between a top of the operator cabin 20 and the chassis 12 to be identical or similar to a corresponding distance in trucks to allow work equipment such as the work equipment 41 possibly designed primarily for mounting on trucks to be easily mountable on the vehicle 10.

In addition to generating motive power to propel the tracked utility vehicle 10, in some embodiments, the power plant 14 may power the work equipment 41 carried by the vehicle 10. For instance, in some cases, the prime mover 17 may be used to supply power to the work equipment 41. In other cases, the power plant 14 may comprise another prime mover for to supply power to the work equipment 41.

b) Track assemblies

The track assemblies 16_1, 16_2 are used to propel the tracked utility vehicle 10 on the ground. The track assembly 16_1 is on a first lateral side of the vehicle 10,

while the track assembly 16_2 is on a second lateral side of the vehicle 10. Each of the track assemblies 16_1, 16_2 supports a portion of a weight of the vehicle 10 in use. In this example, the track assemblies 16_1, 16_2 are similarly configured and are disposed symmetrically relative to the chassis 12 and thus the portion of the weight of the vehicle 10 supported by each of the track assemblies 16_1, 16_2 is about half of the weight of the vehicle 10. In other examples, the portion of the weight of the vehicle 10 supported by each of the track assemblies 16_1, 16_2 may be other than one-half of the weight of the vehicle 10.

With additional reference to Figures 14 to 18, in this embodiment, each track assembly 16_i comprises a plurality of wheels, which includes a drive wheel 24, an idler wheel 23, and a plurality of support wheels 28_1-28_4, and an endless track 22 disposed around the wheels 24, 23, 28_1-28_4. The track assembly 16_i has a length L_{ta}, a width W_{ta}, and a height H_{ta}. A longitudinal direction of the track assembly 16_i is generally parallel to the longitudinal direction of the tracked utility vehicle 10. The track assembly 16_i also has transversal directions, including a widthwise direction which is generally parallel to the widthwise direction of the tracked vehicle 10, and a height direction which is generally parallel to the height direction of the vehicle 10.

The endless track 22 engages the ground to provide traction. The endless track 22 is disposed around the wheels 24, 23, 28_1-28_4 and includes a top run 40 and a bottom run 42. The top run 40 and the bottom run 42 of the endless track 22 are generally parallel to one another and extend along the longitudinal direction of the tracked utility vehicle 10. The top run 40 of the endless track 22 is generally horizontal and has a length that is generally defined by the distance between the drive wheel 24 and the idler wheel 23. The bottom run 42 of the endless track 22 is that portion of the endless track 22 which is beneath the support wheels 28_1-28_4 and which engages the ground. The bottom run 42 of the endless track 22 has a length that is generally defined by the distance between a frontmost one of the support wheel 28_1-28_4, in this case, the support wheel 28_1,

and a rearmost one of the support wheel 28_1-28_4, in this case, the support wheel 28_4.

The drive wheel 24 is in a driven relationship with the power plant 14 to impart movement of the endless track 22 in order to propel the vehicle 10 on the ground. The drive wheel 24 is rotatable about an axis of rotation which is transverse to the longitudinal direction of the vehicle 10 by power derived from the power plant 14 to impart movement of the endless track 22. In this embodiment, the drive wheel 24, which is located in a front region of the chassis 12, comprises a sprocket that engages the endless track 22. The drive wheel 24 may be configured in various other ways in other embodiments.

The idler wheel 23 does not convert power derived from the power plant 14 to motive force for movement of the endless track 22, but rather guides the endless track 22 and maintains it under tension as it is driven by the drive wheel 24. The idler wheel 23 is rotatable about an axis of rotation which is transverse to the longitudinal direction of the tracked utility vehicle 10. In this embodiment, the idler wheel 23, which is located in a rear region of the chassis 12, may comprise a sprocket or any other type of wheel that engages the endless track 22.

The support wheels 28_1-28_4 are arranged in an in-line configuration extending along the longitudinal direction of tracked utility vehicle 10 and roll on the bottom run 42 of the endless track 22 as the vehicle 10 moves on the ground. The support wheels 28_1-28_4 do not convert power derived from the power plant 14 to motive force for movement of the endless track 22, but rather support and distribute onto the ground via the endless track 22 the portion of the weight of the vehicle 10 that is supported by the track assembly 16_i. The support wheels 28_1-28_4 may also maintain the shape and position of the endless track 22, as well as keep the track 22 generally aligned with the general direction of vehicular movement.

Each of the support wheels 28_1-28_4 occupies most of the height H_{ta} of the track assembly 16_i. That is, each of the support wheels 28_1-28_4 has a diameter D_{sw} corresponding to at least half, in some cases at least two-thirds, and in some cases at least three-quarters of the height H_{ta} of the track assembly 16_i. In this case, the diameter D_{sw} of each of the support wheels 28_1-28_4 corresponds to about 65% of the height H_{ta} of the track assembly 16_i. In some embodiments, the diameter D_{sw} of each of the support wheels 28_1-28_4 may be such that the top run 40 of the endless track 22 can contact the support wheels 28_1-28_4 in use. In other embodiments, the support wheels 28_1-28_4 may be made smaller such that there is no contact between the top run 40 of the endless track 22 and the support wheels 28_1-28_4 in use.

The support wheels 28_1-28_4 are carried by a plurality of wheel-carrying assemblies 50_1, 50_2 of the track assembly 16_i. Each of the wheel-carrying assemblies 50_1, 50_2 carries at least two of the support wheels 28_1-28_4 and, since it is an assembly carrying wheels, will be referred to as a "bogie". More particularly, in this embodiment, the bogie 50_1 carries the support wheels 28_1, 28_2 and the bogie 50_2 carries the support wheels 28_3, 28_4.

The bogie 50_1 comprises a link 70 interconnecting the support wheels 28_1, 28_2 and pivotable relative to the chassis 12 about a pivot 71 which defines a pivot axis. The link 70 is a connecting structure that may have any suitable form (e.g., a single member or a plurality of members connected to one another by one or more fasteners, welding, etc.). The support wheels 28_1, 28_2 are rotatably mounted to the link 70 via respective axles which define respective axes of rotation of the support wheels 28_1, 28_2. In this embodiment, the pivot axis of the link 70 lies closer to the axis of rotation of the support wheel 28_1 than that of the support wheel 28_2 and above the axes of rotation of the support wheels 28_1, 28_2. The pivot axis of the link 70 and the axes of rotation of the support wheels 28_1, 28_2 may be positioned differently in relation to one another in other embodiments (e.g., the pivot axis of the link 70 may lie equidistant between the axes of rotation

of the support wheels 28_1, 28_2). The bogie 50_2 is configured similarly to the bogie 50_1 and will thus not be further discussed.

In this embodiment, each support wheel 28_i facilitates installation of the endless track 22. More particularly, in this embodiment, with additional reference to Figures 35 and 36, the support wheel 28_i comprises a first support wheel member 35_1 and a second support wheel member 35_2 which each have a circumference of the support wheel 28_i, are rotatable about the axle of support wheel 28_i, and are installable in and removable from the track assembly 16_i separately from one another. The support wheel member 35_1, which is farthest from a centerline of the vehicle 1, can be viewed as an "outboard" support wheel member while the support wheel member 35_2, which is nearest to the centerline of the vehicle 10, can be viewed as an "inboard" support wheel member. The endless track 22 can be installed while the inboard support wheel member 35_2 is in place but before placement of the outboard support wheel member 31_1, which is put in place after installation of the endless track 22. This makes it easier to install or replace the endless track 22.

More particularly, in this embodiment, the outboard and inboard support wheel members 35_1, 35_2 are secured to a hub 36 by fasteners 48_1-48_F (e.g., bolts and nuts). The hub 36 includes an opening 52 that receives the axle of the support wheel 28_i. In this embodiment, bearings (e.g., tapered bearings) are positioned in the opening 52 of the hub 36 and receive the axle of the support wheel 28_i. A cap 54 covers an end of the axle of the support wheel 28_i. The axle of the support wheel 28_i extends and is fixed to the link 70 of the bogie 50_i. In this case, a fastener 56 (e.g., a bolt) extends transversally to the axle of the support wheel 28_i and through the link 70 to fix the axle to the link 70. The outboard and inboard support wheel members 35_1, 35_2 may be mounted in any other suitable way in other embodiments.

As further discussed later, in this embodiment, the outboard and inboard support wheel members 35_1, 35_2 define in between them a guiding space 38 for receiving a wheel guide of the endless track 22 to guide the endless track 22 as it moves around the wheels 24, 23, 28_1-28_4.

In this embodiment, each support wheel member 35_i comprises a rim portion 57, a hub portion 58, and a radially-extending portion 61 therebetween. The rim portion 57 is in rolling contact with the bottom run 42 of the endless track 22. The hub portion 58 is a central portion of the support wheel member 35_i which receives the axle of the support wheel 28_i. In this example, the hub portion 58 engages the hub 36 and is secured thereto by the fasteners 48_1-48_F. The radially-extending portion 61 extends from the rim portion 57 to the hub portion 58. In this example, the radially-extending portion 61 comprises a plurality of spokes 63_1-63_8 and a plurality of interspoke openings 67_1-67_8 between adjacent ones of the spokes 63_1-63_8.

More particularly, in this embodiment, the rim portion 57, the hub portion 58, and the radially-extending portion 61 are configured such that the support wheel member 35_i is a concave support wheel member defining a concavity 69. Each of the spokes 63_1-63_8 tapers radially towards the hub portion 58. The support wheel member 35_i may have any other suitable shape in other embodiments.

In this example of implementation, the support wheel member 35_i is a metallic support wheel member (e.g., a steel support wheel member) that has been cast into shape. The support wheel member 35_i may be made of any other suitable material and/or using any other suitable manufacturing process in other examples of implementation.

The support wheels 28_1-28_4 may be configured in various other ways in other embodiments. For example, in other embodiments, a support wheel member 35_i of a support wheel 28_i may comprise a rubber or other elastomeric covering on

its rim portion 57 to be in rolling contact with the bottom run 42 of the endless track 22. As another example, in other embodiments, a support wheel 28_i may be a unitary support wheel which does not comprise separate outboard and inboard support wheel members as discussed above. For instance, in some embodiments, as shown in Figures 39 and 40, a support wheel 28_i may be a unitary support wheel which comprises a metallic wheel body 93 on which is mounted a tire 91 that is in rolling contact with the bottom run 42 of the endless track 22.

In this embodiment, as shown in Figures 3, 9, 15 and 20, the idler wheel 23 overlaps the rearmost support wheel 28_4 in the longitudinal direction of the tracked utility vehicle 10. This may be beneficial for stability of the vehicle 10 when the work equipment 41 applies a significant load in a rear end region of the chassis 12 (e.g., when a drill, dump bucket or other piece of equipment is raised in the rear end region of the chassis 12). The longitudinal overlap between the idler wheel 23 and the support wheel 28_4 allows the longitudinal distance between the pivot axis defined by the pivot 71 of the bogie 50_2 and the rear end region of the chassis 12 to be less than if there was no longitudinal overlap between the idler wheel 23 and the support wheel 28_4. This smaller longitudinal distance results in a smaller moment arm and, consequently, a smaller moment associated with the load applied by the work equipment 41 in the rear end region of the chassis 12.

More particularly, in this embodiment, the idler wheel 23 longitudinally overlaps the support wheel 28_4 by being located in the guiding space 38 between the inboard and outboard wheel members 35_1, 35_2 of the support wheel 28_4. The longitudinal overlap between the idler wheel 23 and the support wheel 28_4 may be achieved in various ways in other embodiments. For example, in embodiments in which the support wheel 28_4 is a unitary support wheel which does not comprise separate outboard and inboard support wheel members (e.g., as shown in Figures 39 and 40), the idler wheel 23 may comprise an inboard

idler wheel member and an outboard idler wheel member that define a space therebetween in which the support wheel 28_4 may be located such that the idler wheel 23 and the support wheel 28_4 longitudinally overlap.

The endless track 22 engages the ground to provide traction to the tracked utility vehicle 10. More particularly, as the drive wheel 24 is rotated by power derived from the power plant 14, the drive wheel 24 imparts motion to the endless track 22 for traction of the vehicle 10 on the ground. The endless track 22 has an inner side 32 facing the wheels 24, 23, 28_1-28_4 and a ground-engaging outer side 33, opposite the inner side 32, for engaging the ground.

In this embodiment, as shown in Figures 29 and 30, the endless track 22 comprises an elastomeric body 37 underlying its inner side 32 and its ground-engaging outer side 33. The body 37 is elastomeric in that it comprises elastomeric material which allows the track 22 to elastically change in shape as it is in motion around the wheels 24, 23, 28_1-28_4. The elastomeric material of the body 37 can be any polymeric material with suitable elasticity. In this embodiment, the elastomeric material includes rubber. Various rubber compounds may be used and, in some cases, different rubber compounds may be present in different areas of the track 22. In other embodiments, the elastomeric material may include another elastomer in addition to or instead of rubber (e.g., polyurethane elastomer).

A plurality of cores 21_1-21_C are embedded in the elastomeric material of the body 37 of the endless track 22, spaced apart along the longitudinal direction of the track 22, and extending transversally to the longitudinal direction of the track 22 to impart transverse rigidity to the track 22. The cores 21_1-21_C are made of rigid material. For instance, in this embodiment, the cores 21_1-21_C are metallic (e.g., steel) cores. This type of track can thus sometimes be referred to as a "metal-embedded rubber track" (MERT).

The cores 21_1-21_C interact with the wheels 24, 23, 28_1-28_4 to impart and/or guide motion of the endless track 22. For example, in this embodiment, the track 22 has a plurality of drive openings 19_1-19_O for receiving teeth of the drive wheel 24 such that the drive wheel 24 can engage parts of the track 22 where are located individual ones of the cores 21_1-21_C in order to apply motive force to the track 22. The cores 21_1-21_C also guide motion of the track 22 as it is driven by the drive wheel 24. More particularly, each core 21_i comprises a pair of wings 29_1, 29_2 and a wheel guide 25 between the wings 29_1, 29_2. The wheel guide 25 comprises at least one, in this case, two guide projections 36_1, 36_2 projecting on the inner side 32 of the endless track 22. In this embodiment, when its teeth enter the drive openings 19_1-19_O of the track 22, the drive wheel 24 engages the wheel guide 25 of the core 21_i between the guide projections 36_1, 36_2 to drive the track 22, while the guide projections 36_1, 36_2 pass in the guiding space 38 defined by each of the support wheels 28_1-28_4 in order to guide the track 22 relative to the support wheels 28_1-28_4.

One or more reinforcements may be embedded in the elastomeric material of the body 37 of the endless track 22. For instance, a reinforcement may be a layer of reinforcing cables 43_1-43_R that are adjacent to one another and that extend in the longitudinal direction of the track 22 to enhance strength in tension of the track 22 along its longitudinal direction. In some cases, a reinforcing cable 43_i may be a cord or wire rope including a plurality of strands or wires. In other cases, a reinforcing cable 43_i may be another type of cable and may be made of any material suitably flexible longitudinally (e.g., fibers or wires of metal, plastic or composite material). Various other types of reinforcements may be provided in other embodiments.

The ground-engaging outer side 33 of the endless track 22 comprises a tread pattern to enhance traction on the ground. The tread pattern comprises a plurality of traction projections 49_1-49_T, which can be referred to as “traction lugs”, spaced

apart along the longitudinal direction of the track 22 and engaging the ground to enhance traction.

The inner side 32 of the endless track 22 comprises the guide projections 36_1, 36_2 of each of the cores 21_1-21_C. In addition, the inner side 32 of the track 22 comprises rolling surfaces 39_1, 39_2 on which the support wheels 28_1-28_4 roll to apply the track 22 onto the ground.

The endless track 22 may be configured in various other ways in other embodiments.

For example, in some embodiments, as shown in Figures 31 and 32, the endless track 22 may comprise a pair of belts 30_1, 30_2 spaced apart to accommodate the wheels 24, 23, 28_1-28_4 and a series of cross-links 31_1-31_N distributed longitudinally along the track 22 and extending transversally to interconnect the belts 30_1, 30_2.

Each belt 30_i is elastomeric in that it comprises rubber and/or other elastomeric material. The belt 30_i may comprise one or more reinforcements such as a layer of cables embedded in its rubber and/or other elastomeric material. In this case, the belt 30_i is made up of a series of belt sections connected to one another. In other cases, the belt 30_i may be a one-piece belt.

The cross-links 31_1-31_N interconnect the belts 30_1, 30_2 and interact with the wheels 24, 23, 28_1-28_4 as the endless track 22 moves around these wheels. For example, in this embodiment, as the drive wheel 24 rotates, individual ones of the cross-links 31_1-31_N engage recesses between the teeth of the drive wheel 24, thereby causing the track 22 to be driven. Also, the cross-links 31_1-31_N help to guide motion of the track 22 by contacting the support wheels 28_1-28_4. More particularly, each cross-link 31_i comprises a wheel guide 44 including a pair of guide projections 45_1, 45_2 projecting on the inner side 32 of the endless track 22.

In this embodiment, when its teeth enter gaps between the cross-links 31_1-31_N, the drive wheel 24 engages the wheel guide 44 of the cross-links 28_1-28_4 between the guide projections 45_1, 45_2 to drive the track 22, while the support wheels 28_1-28_4 pass between the guide projections 45_1, 45_2 in order to guide the track 22 relative to the support wheels 28_1-28_4. In such embodiments, each of the support wheels 28_1-28_4 may be a unitary support wheel as shown in Figures 39 and 40.

Each cross-link 31_i comprises an elongated member 73 extending transversally to the longitudinal direction of the endless track 22 to interconnect the belts 30_1, 30_2. The elongated member 73 is made of rigid material, in this case metallic material (e.g., steel). The elongated member 73 is secured to the belts 30_1, 30_2 by fasteners which extend through the elongated member 73, the belts 30_1, 30_2, and backing plates 75_1, 75_2 disposed on the inner side 32 of the track 22. In this embodiment, the cross-link 31_1 comprises a polymeric sole 77 mounted to the elongated member 73. The polymeric sole 77 can be used when the vehicle 10 is to travel on a hard surface (e.g., a paved surface) in order to minimize an impact of the cross-link 31_i on that surface. In other embodiments, the cross-link 31_i may not include any polymeric sole.

As another example, in some embodiments, the endless track 22 may comprises an endless elastomeric body underlying its inner side 32 and its ground-engaging outer side 33, similar to the elastomeric body 37 discussed above in respect of Figures 29 and 30, but without cores embedded in the elastomeric body (e.g., an "all-rubber" track).

In this embodiment, the track assembly 16_i comprises a plurality of wheel mounting structures for mounting the wheels 24, 23, 28_1-28_4 to the chassis 12, including a drive wheel mounting structure 88_1, a pair of support wheel mounting structures 88_2, 88_3, and an idler wheel mounting structure 88_4, which are secured to the chassis 12 and spaced apart in the longitudinal direction of the tracked

utility vehicle 10. Each of the wheel mounting structures 88_1-88_4 supports at least one of the wheels 24, 23, 28_1-28_4. Specifically, in this case, the drive wheel mounting structure 88_1 supports the drive wheel 24, the support wheel mounting structures 88_2, 88_3 support the bogies 50_1, 50_2 carrying the support wheels 28_1-28_4, and the idler wheel mounting structure 88_4 supports the idler wheel 23.

The track assembly 16_i comprises a track tensioner 85 for maintaining tension of the endless track 22. In this embodiment, the track tensioner 85 is connected between the support wheel mounting structure 88_3 and axle of the idler wheel 23 to urge the idler wheel 23 in a direction to maintain the tension of the endless track 22. Also, in this embodiment, the track tensioner 68 is a fluidic tensioning system, e.g., a hydraulic or pneumatic tensioning system, which comprises a piston-cylinder tensioning actuator 79 connected to a fluid reservoir. In this example of implementation, the tensioning actuator 79 is a hydraulic piston-cylinder actuator.

More particularly, in this embodiment, with additional reference to Figures 37 and 38, the tensioning actuator 79 is connected to the support wheel mounting structure 88_3 and to an idler wheel support arm 83 which is pivotable about an axle 89 that is fixed to the idler wheel mounting structure 88_4. The axle of the idler wheel 23 is fixed to the idler wheel support arm 83. The tensioning actuator 79 can apply the tension in the track 22 by extending or retracting to turn the idler wheel support arm 83 about the axle 89 and thus move the idler wheel 23 further or closer to the drive wheel 24.

In this embodiment, the track tensioner 85 becomes active when the tracked utility vehicle 10 is started. That is, the track tensioner 85 applies a force to generate the tension in the endless track 22 when the prime mover 17 of the vehicle 10 is started.

With additional reference to Figure 48, in this embodiment, the track tensioner 85 is hydraulically connected to the hydraulic drive system 21 of the vehicle 10 such that the tension in the endless track 22 is generated by the hydraulic fluid of the hydraulic drive system 21. The tensioning actuator 79 is in hydraulic communication with the hydraulic drive system 21 such that, when the prime mover 17 is started and starts to power the hydraulic drive system 21, the hydraulic fluid of the hydraulic drive system 21 acts on the tensioning actuator 79, which applies a force to generate the tension in the endless track 22.

More particularly, as shown in Figure 49, in this embodiment, the hydraulic drive system 21 comprises a charge pump 27 hydraulically connected to the tensioning actuator 79 via a track tensioner hydraulic circuit 13.

The charge pump 27 is operative to maintain a minimum pressure in the hydraulic drive system 21 when the vehicle 10 is turned on. For example, in some embodiments, the minimum pressure may be at least 300 psi, in some cases at least 325 psi, and in some cases at least 350 psi. For instance, in this embodiment, the minimum pressure is about 375 psi. The minimum pressure in the hydraulic drive system 21 may have any other suitable value in other embodiments. In this example of implementation, the charge pump 27 is a fixed displacement pump. For instance, the charge pump 27 may be a gear pump, a gerotor pump or any other suitable type of pump.

The hydraulic fluid from the charge pump 27 causes the tensioning actuator 79 to apply a force to generate the tension in the endless track 22. This force corresponds to the pressure of the hydraulic fluid in the tensioning actuator 79 multiplied by a cross-sectional area of the piston-cylinder arrangement of the tensioning actuator 79. For example, in some embodiments, the force may be at least 5000 pounds, in some cases at least 6000 pounds, in some cases at least 7000 pounds, and in some cases even more (e.g., up to 10000 pounds). For instance, in this embodiment, the piston-cylinder arrangement of the tensioning

actuator 79 may have an internal diameter of 5 inches such that its internal cross-sectional area is approximately 19.6 square inches and, at the minimum pressure of 375 psi, the force applied by the tensioning actuator 79 is about 7363 pounds. The force may have any other value in other embodiments.

The track tensioner hydraulic circuit 13 regulates flow of hydraulic fluid between the charge pump 27 and the tensioning actuator 79. For example, in this embodiment, the track tensioner hydraulic circuit 13 limits a maximum pressure that is applicable to the tensioning actuator 79. This may be useful, for instance, to prevent situations (e.g., hard debris becoming stuck between the drive wheel 24 and the endless track 22) where the tension in the endless track 22 would become too high. More particularly, with additional reference to Figure 50, in this embodiment, the track tensioner hydraulic circuit 13 comprises a pressure limiter 98 to limit the maximum pressure that is applicable to the tensioning actuator 79. In this example of implementation, the pressure limiter 79 comprises a valve 97 (e.g., a relief valve) which opens at a preset pressure which corresponds to the maximum pressure that is not to be exceeded in the tensioning actuator 97. For example, in some embodiments, the preset pressure at which the valve 97 opens, which corresponds to the maximum pressure allowable in the tensioning actuator 79, may be at least 1000 psi, in some cases at least 1200 psi, in some cases at least 1400 psi, and in some cases even more. For instance, in this embodiment, the preset pressure at which the valve 97 opens is 1400 psi such that the pressure in the tensioning actuator 79 can vary between 375 psi and 1400 psi. The maximum pressure may have any other suitable value in other embodiments

In this embodiment, the track tensioner hydraulic circuit 13 is arranged such that, if the vehicle 10 is momentarily turned off (e.g., for a few minutes) the tension in the endless track 22 is maintained by the tensioning cylinder 79. For example, in this embodiment, the track tensioner hydraulic circuit 13 comprises a check valve 123 arranged for that purpose.

Although in this embodiment the track tensioner 85 is hydraulically connected to the hydraulic drive system 21 of the vehicle 10 via the charge pump 27 such that the tension in the endless track 22 is generated when the prime mover 17 is started and starts to power the hydraulic drive system 21, the track tensioner 85 may be connected in other ways such that it would become active when the vehicle 10 is started (e.g., there may be a dedicated pump for the track tensioner 85).

The track assembly 16_i may be configured in various other ways in other embodiments. For example, although in this embodiment it comprises four (4) support wheels 28_1-28_4, the track assembly 16_i may comprise more than four support wheels (e.g., five (5) support wheels) in other embodiments. As another example, while in this embodiment the drive wheel 24 is located in a front region of the chassis 12 and the idler wheel 23 is located in a rear region of the chassis 12, this may be reversed in other embodiments such that the drive wheel 24 is located in a rear region of the chassis 12 and the idler wheel 23 of the track assembly 16_i is located in a front region of the chassis 12. As yet another example, while in this embodiment the idler wheel 23 is not in a driven relationship with the power plant 14, in other embodiments, the idler wheel 23 may be replaced by another drive wheel that is in a driven relationship with the power plant 14.

c) Operator cabin

The operator cabin 20 is where an operator sits and controls the tracked utility vehicle 10. In this embodiment, the operator cabin 20 comprises a front side 112, a rear side 114, a pair of lateral sides 116_1, 116_2, a roof 118, and a floor 120. The lateral side 116_1 of the operator cabin 20 defines an access opening 122 that can be closed by a door 124 and that allows the operator to enter or exit the operator

cabin 20. A plurality of windows 126_1-126_W are provided to allow the operator to see outside of the vehicle 10.

With additional reference to Figure 41, the operator cabin 20 comprises a seating area 132 and a user interface 130. As further discussed later on, in this embodiment, the operator cabin 20 is configurable in a plurality of cabin configurations in which the seating area 132 and the user interface 130 are configured differently.

The user interface 130 enables the operator to interact with the tracked utility vehicle 10. For example, the user interface 130 comprises controls allowing the operator to move the tracked utility vehicle 10 on the ground. In some cases, the user interface 130 may also include controls for controlling the work equipment 41 carried by the vehicle 10. The user interface 130 comprises an input portion to allow the operator to input commands for execution by the vehicle 10 and an output portion to convey information to the operator.

In this embodiment, the input portion of the user interface 130 comprises an accelerator 133, a steering device 134, a transmission state selector 135, a starter switch 137, and a control lever 138. More particularly:

- The accelerator 133 allows the operator to control a speed of the vehicle 10 on the ground. In this example, the accelerator 133 comprises a speed pedal operated by a foot of the operator. The accelerator 133 may be implemented in other ways in other examples (e.g., a hand-operated accelerator).

- The steering device 134 allows the operator to steer the vehicle 10 on the ground. In this example, the steering device 134 comprises a steering wheel that is rotatable relative to a steering column 144 about a steering axis. In addition to the steering wheel 134, in this example of implementation, the steering column 144 supports the transmission state selector 135, the starter

switch 137, and the control lever 138. The steering device 134 may be implemented in other ways in other embodiments (e.g., a joystick).

- The transmission state selector 135 allows the operator to control a state of power transmission to the track assemblies 16_1, 16_2. For instance, in this example, the transmission state selector 135 comprises a proportional front-neutral-reverse selector to control whether power is transmitted to the track assemblies 16_1, 16_2 to move in a forward or reverse direction or not transmitted to the track assemblies 16_1, 16_2. The transmission state selector 135 may be implemented in other ways in other embodiments.

- The starter switch 137 allows the operator to start the prime mover 17 of the vehicle 10. For instance, in this example, the starter switch 137 comprises a key-receiving unit to receive a key to start the prime mover 17 of the vehicle 10. The starter switch 137 may be implemented in other ways in other embodiments (e.g., a start button, a code entry device, a biometric authentication device, etc.).

- The control lever 138 allows the operator to control various devices of the vehicle 10. For instance, in this example, the control lever 138 includes a wiper control which allows the operator to control a wiper 140 of the front window 126_1 of the operator cabin 20, a washer fluid control which allows the operator to control outflow of washer fluid from a washer fluid nozzle onto the front window 126_1, and a turning indicator 141 control which allows the operator to control a turning indicator of the vehicle 10. The control lever 138 may include any other suitable control in other examples.

The input portion of the user interface 130 may comprise any other input device (e.g., a set of buttons, a joystick, a trackball, etc.) in other embodiments.

87167-35

In this embodiment, the output portion of the user interface 130 comprises a display 140 to visually convey information to the operator. The display 140 may be any suitable type of electronic display (e.g., a liquid-crystal display (LCD), etc.). Various information can be conveyed to the operator on the display 140. For example, in some embodiments, the display 140 may implement an instrument panel that provides: a speedometer indicator which conveys information indicative of the speed at which the vehicle 10 is moving as measured by a speedometer of the vehicle 10; a tachometer indicator which conveys information indicative of the speed at which the prime mover 17 is running as measured by a tachometer of the vehicle 10; an odometer indicator which conveys information indicative of a distance traveled by the vehicle 10 as measured by an odometer of the vehicle 10; a fuel gauge indicator which conveys information indicative of a quantity of fuel remaining in the vehicle 10; and/or any other indicator conveying information to the user. Each of the speedometer indicator, the tachometer indicator, the odometer indicator, and/or other indicators may comprise a digital numerical reading, a digital dial, a digital bar graph, a digital symbol, and/or any other element displayable on the display 140 to convey information to the operator.

The output portion of the user interface 130 may comprise any other output device (e.g., one or more mechanical dials (e.g., a speedometer dial, a fuel gauge dial, etc.) or other mechanical indicators (e.g., a mechanical odometer); one or more light indicators (e.g., low fuel light indicator, etc.); a speaker; etc.) in other embodiments.

The user interface 130 is connected to other components of the tracked utility vehicle 10 to cause execution of commands provided by the operator and to present information to the operator. More particularly, in this embodiment, there are a plurality of connections 142_1-142_C between the user interface 130 and other components of the vehicle 10. These connections 142_1-142_C may comprise one or more mechanical links, wires, cables, wireless links, and/or other

connecting elements depending on how the user interface 130 is connected to other components of the vehicle 10 (e.g., via mechanical control systems and/or via electromechanical systems (e.g., "drive-by-wire" systems)). For example, with additional reference to Figure 45, in this embodiment:

- The connection 142_1 is between the speed pedal 133 and the prime mover 17. For instance, in this embodiment, the connection 142_1 may comprise a wire connected to a pedal position sensor (e.g., comprising a potentiometer) for sensing a position of the speed pedal 133 and transmitting a signal indicative of this position to a powertrain controller 147 controlling the prime mover 17 (e.g., an engine control unit (ECU)). In other embodiments, the connection 142_1 may comprise a mechanical link between the speed pedal 133 and a throttle for the prime mover 17.

- The connection 142_2 is between the steering wheel 134 and a steering controller 143 which controls a steering direction of the vehicle 10 by controlling the hydraulic motors of the hydraulic drive system 21 to cause the endless track 22 of one of the track assemblies 16_1, 16_2 to move faster than the endless track 22 of the other one of the track assemblies 16_1, 16_2 when the vehicle 10 turns. For instance, in this embodiment, the connection 142_2 comprises a steering device angle sensor for sensing an angle in which the steering wheel 134 is positioned and transmitting a signal indicative of this angle to the steering controller 143.

- The connection 142_3 is between the proportional front-neutral-reverse selector 135 and the powertrain controller 147. For instance, in this embodiment, the connection 142_3 may comprise a wire transmitting a signal indicative of the state of the selector 135 to the powertrain controller 147.

- The connection 142_4 is between the starter switch 137 and the prime mover 17. For instance, in this embodiment, the connection 142_4 may comprise a wire between the starter switch 137 and the powertrain controller 147.

- The connections 142_5-142_C are between the control lever 138 and the wiper 140, the washer fluid nozzle, the turning indicator 141 and/or any other device of the vehicle 10 which can be controlled via inputs at the control lever 138. For instance, in this embodiment, the connections 142_6-142_N may comprise wires between the control lever 138 and an outside functionality controller 149 of the vehicle 10 which sends signals to these devices of the vehicle 10 to control these devices. In other embodiments, the connections 142_6-142_N may comprise wires directly connected to these devices.

Controllers of the tracked utility vehicle 10, such as the powertrain controller 147, the steering controller 143 and the outside functionality controller 149, with which the user interface 130 may interact may be implemented in various manners. A controller comprises suitable hardware and/or software (e.g., firmware) implementing: an interface for receiving and transmitting signals to other components of the vehicle 10 to which it is connected; a processing portion comprising one or more processors for performing processing operations, where a processor may be a general-purpose processor executing program code stored in the controller or a specific-purpose processor comprising one or more preprogrammed hardware or firmware elements (e.g., application-specific integrated circuits (ASICs), electrically erasable programmable read-only memories (EEPROMs), etc.); and a memory portion comprising one or more memories for storing program code executed by the processing portion and/or data used during operation of the processing portion, where a memory may be a semiconductor memory (e.g., read-only memory (ROM) and/or random-access memory (RAM)), a magnetic storage medium, an optical storage medium, and/or any other suitable type of memory. In some embodiments, two (2) or more (e.g., all) controllers of the vehicle 10 may be physically distinct from one another and

may be connected to one another via a bus (e.g., a controller-area network (CAN) bus or other suitable bus). In other embodiments, two (2) or more (e.g., all) controllers of the vehicle 10 may be functional entities of a single physical control unit (e.g., a vehicle controller).

The seating area 132 comprises a seat 150 for the operator of the tracked utility vehicle 10. The seat 150, which will be referred to as an "operator seat", is positioned relative to the user interface 130 to allow the operator to easily interact with the user interface 130.

As mentioned previously, in this embodiment, the operator cabin 20 is configurable into a plurality of cabin configurations in which the seating area 132 and the user interface 130 are configured differently. More particularly, in this embodiment, the plurality of cabin configurations in which the operator cabin can be configured includes a first cabin configuration, which is shown in Figures 41 and 42 and will be referred to as a "one-person cabin configuration", and a second cabin configuration, which will be referred to as a "two-person cabin configuration" and is shown in Figures 43 and 44.

As shown in Figure 41, the operator cabin 20 can be configured in the one-person cabin configuration when only the operator is to sit therein. More particularly, in this embodiment, the operator seat 150 is a sole seat of the seating area 132 and is located in an operator seat position 176 which, in this example, is generally in a center of a width of an interior of the operator cabin 20. Various devices of the user interface 130, including the steering wheel 134 and its steering column 144, the speed pedal 133, the front-neutral reverse selector 135, the starter switch 137, and the control lever 138, are also located in respective user device positions which, in this example, are generally in the center of the width of the interior of the operator cabin 20.

As shown in Figure 43, the operator cabin 20 can be configured in the two-person cabin configuration when the operator and a second person are to sit therein. More particularly, in this embodiment, the operator cabin 20 is sized such that it allows the second person, who will be referred to as a "passenger", to sit in the seating area 132 with the operator. To that end, the seating area 132 allows a second seat 152 to be provided for the passenger. The seat 152, which will be referred to as a "passenger seat", is located adjacent to the operator seat 150 such that the operator and the passenger sit side-by-side.

The seating area 132 and the user interface 130 in the one-person cabin configuration are configured differently than in the two-person cabin configuration. More particularly, in this embodiment, the operator seat 150 and devices of the user interface 130 in the two-person cabin configuration are located in respective positions that are different from those in which they are located in the one-person cabin configuration.

An operator seat position 177 of the operator seat 150 in the two-person cabin configuration is different from the operator seat position 176 of the operator seat 150 in the one-person cabin configuration. In this example, the operator seat position 177 of the operator seat 150 in the two-person cabin configuration is displaced in the widthwise direction of the vehicle 10 such that the operator seat 150 is closer to the right side 116_2 of the operator cabin 20 in the two-person cabin configuration than in the one-person cabin configuration. The passenger seat 152 is located at a passenger seat position 178 that is between the left side 116_1 of the operator cabin 20 than the operator seat 150.

The seating area 132 thus defines a plurality of seat positions along the widthwise direction of the vehicle 10, including the operator seat position 176 in the one-person cabin configuration, the operator seat position 177 in the two-person cabin configuration, and the passenger seat position 178 in the two-person cabin configuration. In this embodiment, the seating area 132 comprises

a seat support 151 for mounting the operator seat 150 in its operator seat positions 176, 177 in the one-person cabin configuration and the two-person cabin configuration and for mounting the passenger seat 152 in its passenger seat position 178 adjacent to the operator seat 150 in the two-person cabin configuration. More particularly, in this embodiment, the seat support 151 comprises mounting holes 154_1-154_H in the floor 120 of the operator cabin 20 to receive fasteners (e.g., bolts) for mounting the operator seat 150 or the passenger seat 152 to the seat support 151 (e.g., four bolts in four corners of the seat's base). In other embodiments, the seat support 151 may comprise mounting projections, mounting brackets, and/or other mounting structures to mount the operator seat 150 or the passenger seat 152 to the seat support 151. Also, in this embodiment, a seatbelt for the operator seat 150 remains the same in the one-person cabin configuration and the two-person cabin configuration, while an additional seatbelt is installed on the passenger's side in the two-person cabin configuration.

User device positions of devices of the user interface 130, including the steering wheel 134 and its steering column 144, the speed pedal 133, the front-neutral reverse selector 135, the starter switch 137, and the control lever 138, in the two-person cabin configuration are different from the user device positions of these devices in the one-person cabin configuration. In this example, the positions of the steering wheel 134 and its steering column 144, the speed pedal 133, the front-neutral reverse selector 135, the starter switch 137, and the control lever 138 in the two-person cabin configuration are displaced in the widthwise direction of the vehicle 10 such that these devices are closer to right side 116_2 of the operator cabin 20 in the two-person cabin configuration than in the one-person cabin configuration.

The operator cabin 20 comprises a user interface support 160 for mounting devices of the user interface 130, including the steering wheel 134 and its steering column 144, the speed pedal 133, the front-neutral reverse selector 135,

the starter switch 137, and the control lever 138, such that these devices are movable between the one-person cabin configuration and the two-person cabin configuration. More particularly, in this embodiment, the speed pedal 133 and the steering column 144, which supports the steering wheel 134, the front-neutral reverse selector 135, the starter switch 137, and the control lever 138, are mounted to the user interface support 160 such that they are movable in the widthwise direction of the vehicle 10 to change the operator cabin 20 between the one-person cabin configuration and the two-person cabin configuration.

The user interface support 160 defines a plurality of steering device positions for the steering wheel 134 and its steering column 144 along the widthwise direction of the vehicle 10, including a central steering device position 161 in the one-person cabin configuration and a side steering device position 162 in the two-person cabin configuration. The user interface support 160 also defines a plurality of accelerator positions for the speed pedal 133 along the widthwise direction of the vehicle 10, including a central accelerator position 163 in the one-person cabin configuration and a side accelerator position 164 in the two-person cabin configuration. In this embodiment, with additional reference to Figure 46, the user interface support 160 comprises mounting holes 167_1-167_{20} for receiving fasteners (e.g., bolts) to fasten the steering column 144 and the speed pedal 133 to the user interface support 160 in respective ones of their central and side steering device positions 161, 162 and central and side accelerator positions 163, 164 in the one-person cabin configuration and the two-person cabin configuration. In other embodiments, the user interface support 160 may comprise mounting projections, mounting brackets, and/or other mounting structures to mount the steering column 144 and the speed pedal 133 to the user interface support 160.

More particularly, in this embodiment, the user interface support 160 comprises a fixed support structure 165 and a movable support structure 166 that can be moved relative to the fixed support structure 165. The support structures 165,

166 define respective ones of the mounting holes 167_1-167_{20} which can be aligned with one another to receive fasteners.

In this example of implementation, the fixed support structure 165 comprises a fixed plate 169 which extends obliquely to a horizontal surface of the floor 120 and another fixed plate 170 which also extends obliquely to the horizontal surface of the floor 120 but at a lesser angle than the fixed plate 169. The fixed plates 169, 170 define the mounting holes 167_1-167_{15}. The movable support structure 166 comprises a movable plate 171 and another movable plate 173 which respectively overlap the fixed plates 169, 170 and define the mounting holes 167_{16}-167_{20}. The movable plate 171 also comprises a steering column opening 172 through which wires from the steering column 144 extend and mounting holes 175_1-175_4 to receive fasteners fastening the steering column 144 to the user interface support 160.

The steering column 144 can be moved from its central steering device position 161 in the one-person cabin configuration to its side steering device position 162 in the two-person cabin configuration by: releasing fasteners (e.g., unscrewing bolts) received in the mounting holes 167_1, 167_2, 167_4, 167_6, 167_7 of the fixed plates 169, 170 and the mounting holes 167_{16}-167_{20} of the movable plates 171, 173; moving the movable support structure 166 relative to the fixed support structure 165 in the widthwise direction of the vehicle 10 toward the right such that the mounting holes 167_{16}-167_{20} of the movable support structure 166 align with the mounting holes 167_3, 167_4, 167_5, 167_{11}, 167_{12} of the fixed support structure 165; and using fasteners in these aligned ones of the mounting holes 167_1-167_{20} to re-fasten the movable support structure 166 to the fixed support structure 165. Wires from the steering column 144 can be disconnected, moved, and reconnected to move the steering column 144 between its central steering device position and side steering device position.

The speed pedal 133 can be moved from its central accelerator position 163 in the one-person cabin configuration to its side accelerator position 164 in the two-person cabin configuration by: releasing fasteners (e.g., unscrewing bolts) received in the mounting holes 167_8-167_{10} of the fixed plate 170 and holes of the speed pedal 133; moving the speed pedal 133 relative to the fixed support structure 165 in the widthwise direction of the vehicle 10 toward the right such that the holes of the speed pedal 133 align with the mounting holes 167_{13}- 167_{15} of the fixed support structure 165; and using fasteners in these aligned holes to re-fasten the speed pedal 133 to the fixed support structure 165.

The steering column 144 and the speed pedal 133 can be moved from their side steering device position 162 and side accelerator position 164 in the two-person cabin configuration to their central steering device position 161 and central accelerator position 163 in the one-person cabin configuration using a procedure that is reverse to that described above.

The seat support 151 and/or the user interface support 160 may be constructed in various other ways in other embodiments to provide the different seat positions 176, 177, 178, steering device positions 161, 162, and/or accelerator positions 163, 164. For example, in other embodiments, the seat support 151 and/or the user interface support 160 may provide the different seat positions 176, 177, 178, steering device positions 161, 162, and/or accelerator positions 163, 164 by allowing the operator seat 150, the steering column 144, and/or the speed pedal 133 to be moved between such different positions without having to untighten bolts or other fasteners (e.g., a rail mechanism which allows the steering column 144 and/or the speed pedal 133 to be unlocked, slid on a rail to a desired position, and locked in place; an electromechanical system comprising an actuator that can be activated to cause the steering column 144 and/or the speed pedal 133 to automatically move to a desired position; etc.).

The operator cabin 20 thus allows a user of the tracked utility vehicle 10, who may be the operator or another user (e.g., an owner of the vehicle 10 or an employee of an entity owning the vehicle 10), to select a desired one of the one-person cabin configuration and the two-person cabin configuration and readily configure the operator cabin 20 in that selected configuration. This can enhance a versatility of the vehicle 10 depending on an application or environment in which it is used.

While in this embodiment the plurality of cabin configurations in which the operator cabin 20 can be configured include the one-person cabin configuration and the two-person cabin configuration, in other embodiments, the plurality of cabin configurations in which the operator cabin 20 can be configured may include any number of different cabin configurations. For example, in other embodiments, the plurality of cabin configurations in which the operator cabin 20 can be configured may include two (2) or more one-person cabin configurations that are different from one another, and may or may not include a two-person cabin configuration. For instance, in some embodiments, the operator cabin 20 may be configured in a first one-person cabin configuration in which the operator seat 150 is in a first operator seat position (e.g., the operator seat position 176 in the cabin configuration shown in Figure 41) and in a second one-person cabin configuration in which the operator seat 150 is in a second operator seat position different from the first operator seat position (e.g., the operator seat position 177 in the cabin configuration shown in Figure 43), without including the passenger seat 152. This may allow the operator of the vehicle 10 to sit and operate the vehicle 10 in different positions in the operator cabin 20 depending on a need or preference of the operator and/or an application or environment in which the vehicle 10 is used.

The operator cabin 20, including the user interface 130 and the seating area 132, may be constructed in various other ways in other embodiments. For example, in other embodiments, the operator cabin 20 may not be configurable in different

cabin configurations, but may rather have only a single cabin configuration. For instance, in some cases, the operator cabin 20 may always comprise only the operator seat 150, i.e., always have a one-person cabin configuration, or both the operator seat 150 and the passenger seat 152, i.e., always have a two-person cabin configuration.

d) Chassis

The chassis 12 comprises a frame 15 extending along the longitudinal axis 59 of the tracked utility vehicle 10 and supporting various components of the vehicle 10, including the power plant 14, the track assemblies 16_1, 16_2, and the operator cabin 20. The frame 15 also supports the work equipment 41 carried by the vehicle 10.

As further discussed below, in this embodiment, the frame 15 is "truck-like" in that at least part of it is configured like a truck frame. This enables the work equipment 41 to be mounted to the frame 15 like on a truck frame. In particular, the frame 15 is configured such that the work equipment 41 can be supported on an area like that standardly supporting such work equipment in truck frames and can be secured to the frame 15 using attachment devices (e.g., attachment plates or attachment threaded rod assemblies) standardly used for securing such work equipment to truck frames. As a result, work equipment such as the work equipment 41 may be as easily installable on the tracked utility vehicle 10 as on trucks. Work equipment such as the work equipment 41 which may be primarily designed for trucks due to a potentially larger market for trucks can therefore also be easily installed on the tracked utility vehicle 10.

With additional reference to Figures 19 to 25, in this embodiment, the frame 15 comprises an upper frame structure 60 and a lower frame structure 62.

The upper frame structure 60 is that portion of the frame 15 on which rests and to which is secured the work equipment 41 carried by the tracked utility vehicle 10. To that end, the upper frame structure 60 includes an equipment mounting area 99 for mounting the work equipment 41 above the frame 15. In this embodiment, the upper frame structure 60 comprises a pair of side rails 64_1, 64_2 extending along the longitudinal direction of the vehicle 10 and spaced apart in the widthwise direction of the vehicle 10. The upper frame structure 60 also comprises a plurality of crossmembers 66_1, 66_2 extending transversally to the longitudinal direction of the vehicle 10 between the side rails 64_1, 64_2. The upper frame structure 60 can thus be viewed as being a type of "ladder frame" construction.

In this embodiment, each side rail 64_i is a C-shaped channel including a web 68 extending between a top flange 70_1 and a bottom flange 70_2. The side rail 64_i is made of metallic material, in this case steel. The side rail 64_i is dimensioned such that the side rails 64_1, 64_2 are able to support the work equipment 41. For example, in some examples of implementation: the web 68 may have a height H_w of at least 10 inches, in some cases at least 14 inches, and in some cases at least 18 inches and/or a thickness T_w of at least 1/4 inches, in some cases at least 5/8 inches, and in some cases at least 1 inch; and/or each of the flanges 70_1, 70_2 may have a width W_f of at least 2 inches, in some cases at least 5 inches, and in some cases at least 8 inches and/or a thickness T_f of at least 1/4 inches, in some cases at least 5/8 inches, and in some cases at least 1 inch. In this example, the side rail 64_i is made by bending a metallic plate to give it its C-shape cross-section. Dimensions of the side rails 64_1, 64_2 may take on various other values in other embodiments.

The side rails 64_1, 64_2 may be configured in various other ways in other embodiments. For example, in some embodiments, each of the side rails 64_1, 64_2 may be: a channel having a cross-sectional shape other than a C-shape (e.g., a U-shape); a hollow beam (e.g., a rectangular box beam); or any other suitable

elongated structural member. As another example, in some embodiments, the side rails 64_1, 64_2 may be made of material other than steel.

The crossmembers 66_1, 66_2 are secured to the side rails 64_1, 64_2 to interconnect the side rails 64_1, 64_2. More particularly, in this embodiment, fasteners (e.g., bolts and/or rivets) secure the crossmembers 66_1, 66_2 to the side rails 64_1, 64_2. In other embodiments, the crossmembers 66_1, 66_2 may be secured to the side rails 64_1, 64_2 in other ways (e.g., by welding). Also, in this embodiment, the crossmember 66_1 is connected to the side rails 64_1, 64_2, while the crossmember 66_2 is connected to extension rail members 65_1, 65_2 that are secured to the side rails 64_1, 64_2. In this case, the extension rail members 65_1, 65_2 are C-shape channels fitted within the C-shape channels 64_1, 64_2.

In this embodiment, each crossmember 66_i is a channel-like elongated structural member including a web 72 extending between a top flange 74_1, a bottom flange 74_2, and opposite end flanges 74_3, 74_4. The crossmember 66_i is made of metallic material, in this case steel. A plurality of openings 76_1-76_5 are provided in the web 72 for passing cables (e.g., hydraulic cables and/or electric cables) connected to components of the vehicle 10 and/or the work equipment 41.

The crossmembers 66_1, 66_2 may be configured in various other ways in other embodiments. For example, in some embodiments, each of the crossmembers 66_1, 66_2 may be a hollow beam (e.g., a rectangular box beam) or any other suitable elongated structural member. As another example, in some embodiments, the crossmembers 66_1, 66_2 may be made of material other than steel.

A spacing S_r of the side rails 64_1, 64_2 in the widthwise direction of the tracked utility vehicle 10 may take on various values. In this embodiment, the spacing S_r of the side rails 64_1, 64_2 corresponds to a standard truck frame side rail spacing. The "standard truck frame side rail spacing" refers to an industry-standard

spacing of side rails of a frame of a truck chassis for trucks with a gross vehicle weight rating (GVWR) over 14000 lbs (6351 kg). A truck's GVWR corresponds to a curb weight of the truck plus a cargo and passenger weight capacity of the truck. In the United States., a GVWR over 14000 lbs would be a class 4 or higher class according to the U.S. Department of Transportation's truck classification. A truck frame side rail spacing is considered to be "standard" if a majority of truck models with a GVWR rating over 14000 lbs sold by truck manufacturers in a given year in the country where the tracked utility vehicle 10 is manufactured and/or used have that truck frame side rail spacing.

For example, in this embodiment, the standard truck frame side rail spacing is 34 inches and thus the spacing S_r of the side rails 64_1, 64_2 is 34 inches. This may useful, for instance, in cases where the vehicle 10 is manufactured or used in the United States. The standard truck frame side rail spacing, and thus the spacing S_r of the side rails 64_1, 64_2, may take on other values in other embodiments (e.g., 30 inches in Europe).

In other embodiments, the spacing S_r of the side rails 64_1, 64_2 may not correspond to a standard truck frame side rail spacing, but may be selected taking into account truck frame side rail spacings. For example, in some embodiments, the spacing S_r of the side rails 64_1, 64_2 may be no greater than 34 inches (about 0.86 m). For instance, in some embodiments, the spacing S_r of the side rails 64_1, 64_2 may be between 30 inches and 34 inches, in some cases between 32 inches and 34 inches, and in some cases between 33 inches and 34 inches.

In yet other embodiments, the spacing S_r of the side rails 64_1, 64_2 may be selected without considering any truck frame side rail spacing, and can thus have any suitable value.

The lower frame structure 62 is disposed below the upper frame structure 60 and provides a main structure for supporting the track assemblies 16_1, 16_2. In this embodiment, the lower frame structure 62 is more rigid than the upper frame structure 60. In this case, the lower frame structure 62 is the most rigid portion of the frame 15 and provides torsional ridigity. In this embodiment, the lower frame structure 62 comprises a pair of side beams 80_1, 80_2 extending along the longitudinal direction of the tracked utility vehicle 10 and spaced apart in the widthwise direction of the vehicle 10. The lower frame structure 62 also comprises a plurality of crossmembers 82_1-82_5 extending transversally to the longitudinal direction of the vehicle 10 between the side beams 80_1, 80_2. The lower frame structure 62 can thus also be viewed as being a type of "ladder frame" construction. The lower frame structure 62 also comprises a base plate 81 extending between the side beams 80_1, 80_2 to protect a fuel tank. The lower frame structure 62 also comprises a front drawbar 87_1 and a rear drawbar 87_2.

In this embodiment, each of the side beams 80_1, 80_2 is a rectangular box beam made of metallic material, in this case steel. The side beams 80_1, 80_2 may be configured in various other ways in other embodiments. For example, in some embodiments, each of the side beams 80_1, 80_2 may be: a hollow beam having a cross-sectional shape other than rectangular (e.g., circular or otherwise curved); a channel having a C-shape, U-shape or other suitable shape; or any other suitable elongated structural member. As another example, in some embodiments, the side beams 80_1, 80_2 may be made of material other than steel.

The crossmembers 82_1-82_5 are secured to the side beams 80_1, 80_2 to interconnect the side beams 80_1, 80_2. More particularly, in this embodiment, the crossmembers 82_1-82_5 are secured to the side beams 80_1, 80_2 by welding. The crossmembers 82_1-82_5 may be secured to the side beams 80_1, 80_2 in other ways in other embodiments (e.g., by fasteners such as bolts and/or rivets).

In this embodiment, the frame 15 defines an internal space 86. This internal space 86, which will be referred to as a "tub", can be used to receive components of the tracked utility vehicle 10 and/or part of the work equipment 41 carried by the tracked utility vehicle 10 (e.g., the vehicle's fuel tank, pipes, cables, a dump box's hydraulic cylinder, a crane's torque box, etc.).

As shown in Figure 20, in this embodiment, the frame 15 defines a vertical gap 78 between the upper frame structure 60 and the lower frame structure 62. The vertical gap 78 may facilitate use of attachment threaded rod assemblies or other attachment devices for attaching the work equipment 41 to the frame 15, as further discussed later on. For example, in some embodiments, the vertical gap 78 may have a height H_9 in the height direction of the tracked utility vehicle 10 of at least 0.5 inches, in some cases at least 0.75 inches, in some cases at least 1 inch, in some cases 1.25 inches, and even more in some cases (e.g., 2 inches or more). In other embodiments, the upper frame structure 60 and the lower frame structure 62 may be contiguous such that there is no such vertical gap between them.

The track assemblies 16_1, 16_2 are mounted to the frame 15. In this embodiment, the track assemblies 16_1, 16_2 are mounted to both the lower frame structure 62 and the upper frame structure 60. More particularly, in this embodiment, each of the wheel mounting structures 88_1-88_4 is secured to both the lower frame structure 62 and the upper frame structure 60. In this case, each of the wheel mounting structures 88_1-88_4 is welded to the side beams 80_1, 80_2 of the lower frame structure 62 and fastened to the side rails 64_1, 64_2 of the upper frame structure 60 by fasteners (e.g., bolts and/or rivets). In other cases, each of the wheel mounting structures 88_1-88_4 may be fastened to the side beams 80_1, 80_2 of the lower frame structure 62 by fasteners (e.g., bolts and/or rivets) and/or welded to the side rails 64_1, 64_2 of the upper frame structure 60. In this embodiment, the support wheel mounting structures 88_2, 88_3 are also welded to the crossmembers 82_1, 82_4.

The work equipment 41 is mounted to the frame 15. In this embodiment, the work equipment 41 is mounted to the upper frame structure 60. More particularly, in this embodiment, the work equipment 41 rests on and is secured to the side rails 64_1, 64_2. Since the side rails 64_1, 64_2 are C-shape channels standardly used in truck frames and since the spacing S_r of the side rails 64_1, 64_2 corresponds to the standard truck frame side rail spacing, work equipment such as the work equipment 41 may be as easily installable on the tracked utility vehicle 10 as on trucks, even if it was primarily designed for trucks.

With additional reference to Figures 26 to 28, in this embodiment, a base 90 of the work equipment 41 rests on the side rails 64_1, 64_2 of the frame 15. The base 90 of the work equipment 41 is secured to the side rails 64_1, 64_2 by a plurality of attachment devices 92_1-92_R, 94_1-94_P. For example, in this embodiment, each of the attachment devices 92_1-92_R includes an attachment threaded rod assembly, and each of the attachment devices 94_1-94_P includes an attachment plate. Such attachment threaded rod assemblies and attachment plates are standardly used for securing work equipment such as the work equipment 41 to trucks.

Each attachment threaded rod assembly 92_i includes a pair of threaded rods 95_1, 95_2 and a bottom link 96 disposed around the side rail 64_i. The side rail 64_1 is located between the threaded rods 95_1, 95_2 which are secured to the bottom link 96 and an attachment part 95 of the base 90 of the work equipment 41 with fasteners (e.g., nuts) to clamp the side rail 64_i. In this embodiment, the vertical gap 78 between the side rail 64_i and the side beam 80_1 facilitates installation of the attachment threaded rod assembly 92_i. In particular, the gap 78 facilitates positioning of the bottom link 96 beneath the side rail 64_i and tightening of the fasteners on the threaded rods 95_1, 95_2.

Each attachment plate 94_i is secured to the side rail 64_i and to the base 90 of the work equipment 41. More particularly, in this embodiment, the attachment plate

94_i is fastened to the web 68 of the side rail 64_i by fasteners (e.g., bolts and/or rivets) and welded to the base 90 of the work equipment 41. This type of attachment plate can sometimes be referred to as a "fish plate". The attachment plate 94_i may be secured to the side rail 64_i and to the base 90 of the work equipment 41 in other ways in other embodiments (e.g., by being fastened to the base 90 of the work equipment and/or welded to the side rail 64_i).

In this example of implementation, the attachment plate 94_i includes a generally rectangular lower part 51 fastened to the side rail 64_i and a curved, in this case generally semicircular, upper part 53 welded to the base 90 of the work equipment 41. The upper part 53 of the attachment plate 94_i includes an opening 55, which may allow a greater length of weld bead when the attachment plate 94_i is welded to the base 90 of the work equipment 41. The attachment plate 94_i may have various other shapes in other examples of implementation.

Although in this embodiment the attachment devices 92_1-92_R, 94_1-94_P securing the work equipment 41 to the frame 15 are attachment threaded rod assemblies and attachment plates, various other types of attachment devices may be used in other embodiments.

While in embodiments considered above the tracked vehicle 10 is a tracked carrier vehicle carrying work equipment, in other embodiments, certain features (e.g., the track tensioner 85 connected to the hydraulic drive system 21) of the tracked vehicle 10 may be implemented in other types of industrial tracked vehicles, such as an agricultural vehicle (e.g., a tractor, a harvester, etc.) or a construction vehicle (e.g., a loader, a bulldozer, an excavator, etc.).

Any feature of any embodiment discussed herein may be combined with any feature of any other embodiment discussed herein in some examples of implementation.

Although various embodiments have been illustrated, this was for the purpose of describing, but not limiting, the invention. Various modifications will become apparent to those skilled in the art and are within the scope of this invention, which is defined by the following claims.

CLAIMS

1. A tracked vehicle comprising:
   a) a chassis comprising a frame extending along a longitudinal direction of the tracked vehicle, the frame comprising an equipment mounting area for mounting work equipment above the frame;
   b) an operator cabin mounted to the frame;
   c) a power plant mounted to the frame and comprising a prime mover, at least part of the power plant being mounted above the frame and behind the operator cabin; and
   d) a plurality of track assemblies for traction of the tracked vehicle, a first one of the track assemblies being on a first lateral side of the tracked vehicle, a second one of the track assemblies being on a second lateral side of the tracked vehicle, each track assembly of the plurality of track assemblies being mounted to the frame and comprising:
      i) a plurality of wheels including:
         - a drive wheel;
         - an end wheel spaced apart from the drive wheel in the longitudinal direction of the tracked vehicle; and
         - a plurality of support wheels arranged in an inline configuration between the drive wheel and the end wheel;

      and
      ii) an endless track disposed around the plurality of wheels for engaging the ground, the endless track comprising:
         I. a top run extending between the drive wheel and the end wheel over the support wheels; and
         II. a ground-engaging bottom run extending under the support wheels,

      the drive wheel being in driving engagement with the endless track to impart motion to the endless track.

2. The tracked vehicle of claim 1, wherein the prime mover is mounted above the frame and behind the operator cabin.

3. The tracked vehicle of any one of claims 1 and 2, wherein the power plant comprises a hydraulic pump connected to the prime mover and mounted above the frame and behind the operator cabin.

4. The tracked vehicle of claim 3, wherein the power plant comprises a housing which houses the prime mover and the hydraulic pump, the housing, the prime mover and the hydraulic pump being installable on and removable from the frame together as a unit.

5. The tracked vehicle of any one of claims 1 to 4, wherein at least part of the power plant is mounted above the frame and on a lateral side of the operator cabin.

6. The tracked vehicle of any one of claims 1 to 5, wherein the operator cabin comprises a seating area for allowing an operator to sit, the seating area defining a first seat position and a second seat position along a widthwise direction of the tracked vehicle.

7. The tracked vehicle of claim 6, wherein the operator cabin comprises a user interface for enabling the operator to control the tracked vehicle, the user interface comprising an accelerator for controlling a speed of the tracked vehicle and a steering device for steering the tracked vehicle, the operator cabin being configurable in a plurality of cabin configurations including:

- a first cabin configuration in which the operator sits in the first seat position of the seating area and the steering device is in a first steering device position along the widthwise direction of the tracked vehicle; and

- a second cabin configuration in which the operator sits in the second seat position of the seating area and the steering device is in a second steering device position along the widthwise direction of the tracked vehicle.

8. The tracked vehicle of claim 7, wherein: the first cabin configuration is a one-person cabin configuration in which the seating area has a single seat, the single seat being located at the first seat position; and the second cabin configuration is a two-person cabin configuration in which the seating area has a first seat for the operator and a second seat for a second person, the first seat being located at the second seat position.

9. The tracked vehicle of any one of claims 7 and 8, wherein the accelerator is in a first accelerator position along the widthwise direction of the tracked vehicle in the first cabin configuration and in a second accelerator position along the widthwise direction of the tracked vehicle in the second cabin configuration.

10. The tracked vehicle of any one of claims 7 to 9, wherein the operator cabin comprises a user interface support for mounting the accelerator and the steering device such that the accelerator and the steering device are movable in the widthwise direction of the tracked vehicle between the first cabin configuration and the second cabin configuration.

11. The tracked vehicle of claim 10, wherein the user interface support comprises a fixed support structure and a movable support structure that can be moved relative to the fixed support structure in the widthwise direction of the tracked vehicle.

12. The tracked vehicle of any one of claims 1 to 5, wherein the operator cabin comprises a seating area for allowing an operator to sit, the seating area

comprising a first seat and a second seat adjacent to one another along a widthwise direction of the tracked vehicle.

13. The tracked vehicle of any one of claims 1 to 12, wherein the tracked vehicle, with the work equipment mounted to the frame, respects a vehicle height limit for travel on a public road infrastructure.

14. The tracked vehicle of claim 13, wherein the vehicle height limit for travel on the public road infrastructure is between 13.5 feet and 14 feet.

15. The tracked vehicle of any one of claims 1 to 14, wherein an overall height of the tracked vehicle, measured with the work equipment in a retracted nonworking state, is no more than 12.5 feet.

16. The tracked vehicle of any one of claims 1 to 14, wherein an overall height of the tracked vehicle, measured with the work equipment in a retracted nonworking state, is no more than 12 feet.

17. The tracked vehicle of any one of claim 1 to 16, wherein the tracked vehicle is configured such that, when the work equipment is in a retracted nonworking state, the work equipment extends frontward in the longitudinal direction of the tracked vehicle beyond a rear side of the operator cabin.

18. The tracked vehicle of claim 17, wherein the tracked vehicle is configured such that, when the work equipment is in the retracted nonworking state, the work equipment extends frontward in the longitudinal direction of the tracked vehicle beyond a front side of the operator cabin.

19. The tracked vehicle of any one of claims 1 to 18, wherein the operator cabin comprises a roof defining a height of the tracked vehicle, the height of the tracked vehicle to the roof being no more than 2.8 m.

20. The tracked vehicle of claim 19, wherein the height of the tracked vehicle to the roof is no more than 2.6 m.

21. The tracked vehicle of any one of claims 1 to 20, wherein the frame comprises a pair of side rails spaced apart in a widthwise direction of the tracked vehicle for mounting the work equipment to the side rails, a spacing of the side rails in the widthwise direction of the tracked vehicle corresponding to a standard truck frame side rail spacing.

22. The tracked vehicle of claim 21, wherein the standard truck frame side rail spacing is 34 inches such that the spacing of the side rails in the widthwise direction of the tracked vehicle is 34 inches.

23. The tracked vehicle of any one of claims 1 to 20, wherein the frame comprises a pair of side rails spaced apart in a widthwise direction of the tracked vehicle for mounting the work equipment to the side rails, a spacing of the side rails in the widthwise direction of the tracked vehicle being no greater than 34 inches.

24. The tracked vehicle of any one of claims 21 to 23, wherein the frame comprises (i) an upper frame structure including the pair of side rails and (ii) a lower frame structure below the upper frame structure, the frame defining a vertical gap between the upper frame structure and the lower frame structure.

25. The tracked vehicle of claim 24, wherein the track assembly comprises a plurality of wheel mounting structures secured to the frame and spaced apart in the longitudinal direction of the tracked vehicle, each wheel mounting structure of the plurality of wheel mounting structures supporting at least one of the plurality of wheels of the track assembly, the wheel

mounting structure being secured to both (i) a given one of the side rails and (ii) the lower frame structure.

26. The tracked vehicle of any one of claims 24 and 25, wherein the lower frame structure is more rigid than the upper frame structure.

27. The tracked vehicle of any one of claims 24 to 26, wherein the vertical gap has a height in a height direction of the tracked vehicle of at least 0.5 inches.

28. The tracked vehicle of claim 27, wherein the height of the vertical gap is at least 1 inch.

29. The tracked vehicle of any one of claims 24 to 28, wherein the vertical gap facilitates installation of an attachment threaded rod assembly for attaching the work equipment to the side rails.

30. The tracked vehicle of any one of claims 24 to 29, wherein the lower frame structure comprises a pair of hollow beams spaced apart in the widthwise direction of the tracked vehicle.

31. The tracked vehicle of any one of claims 21 to 30, wherein each side rail of the pair of side rails includes a C-shape channel.

32. The tracked vehicle of any one of claims 21 to 31, wherein the frame comprises a plurality of crossmembers extending transversally to the longitudinal direction of the tracked vehicle and interconnecting the side rails.

33. The tracked vehicle of any one of claims 1 to 32, wherein each support wheel of the plurality of support wheels occupies a majority of a height of the track assembly.

34. The tracked vehicle of claim 33, wherein the support wheel comprises: a first support wheel member rotatable on an axle of the support wheel and having a circumference of the support wheel; and a second support wheel member rotatable on the axle of the support wheel and having the circumference of the support wheel, the second support wheel member being installable in and removable from the track assembly separately from the first support wheel member.

35. The tracked vehicle of claim 34, wherein the first support wheel member and the second support wheel member define a guiding space therebetween for receiving a wheel guide on an inner side of the endless track.

36. The tracked vehicle of any one of claims 1 to 35, wherein the end wheel is a rear wheel, the rear wheel and a rearmost one of the support wheels overlapping in the longitudinal direction of the tracked vehicle.

37. The tracked vehicle of any one of claims 1 to 36, wherein the power plant comprises a hydraulic drive system connected to the prime mover, the track assembly comprising a track tensioner for maintaining tension in the endless track, the track tensioner comprising a hydraulic actuator hydraulically connected to the hydraulic drive system.

38. The tracked vehicle of claim 37, wherein the hydraulic drive system comprises a charge pump, the hydraulic actuator being hydraulically connected to the charge pump.

39. The tracked vehicle of any one of claims 37 and 38, comprising a pressure limiter hydraulically connected between the hydraulic actuator and the hydraulic drive system to limit a maximum pressure applicable to the hydraulic actuator.

40. The tracked vehicle of claim 39, wherein the pressure limiter comprises a valve arranged to change state at the maximum pressure.

41. The tracked vehicle of claim 39, wherein the maximum pressure is at least 1000 psi.

42. The tracked vehicle of any one of claims 37 to 41, wherein the track tensioner becomes active when the tracked vehicle is started.

43. The tracked vehicle of claim 42, wherein the hydraulic actuator is in hydraulic communication with the hydraulic drive system such that, when the prime mover is started and starts to power the hydraulic drive system, hydraulic fluid of the hydraulic drive system acts on the hydraulic actuator which applies a force to generate tension in the endless track.

44. The tracked vehicle of claim 43, wherein the track tensioner is arranged such that, if the tracked vehicle is momentarily turned off, the tension in the endless track is maintained by the hydraulic actuator.

45. The tracked vehicle of claim 44, wherein the track tensioner comprises a valve arranged to maintain the tension in the endless track if the tracked vehicle is momentarily turned off.

46. The tracked vehicle of any one of claims 1 to 45, wherein the tracked vehicle has a length of at least 5 m, a width of at least 2 m, and a height of no more than 4 m.

47. The tracked vehicle of any one of claim 1 to 46, wherein the tracked vehicle has a payload capacity of at least 10000 lbs.

48. A tracked vehicle comprising:

a) a chassis comprising a frame extending along a longitudinal direction of the tracked vehicle, the frame comprising an equipment mounting area for mounting work equipment above the frame;

b) an operator cabin mounted to the frame, the operator cabin comprising a seating area for allowing an operator to sit, the seating area defining a first seat position and a second seat position along a widthwise direction of the tracked vehicle;

c) a power plant mounted to the frame and comprising a prime mover; and

d) a plurality of track assemblies for traction of the tracked vehicle, a first one of the track assemblies being on a first lateral side of the tracked vehicle, a second one of the track assemblies being on a second lateral side of the tracked vehicle, each track assembly of the plurality of track assemblies being mounted to the frame and comprising:

i) a plurality of wheels including:

- a drive wheel;
- an end wheel spaced apart from the drive wheel in the longitudinal direction of the tracked vehicle; and
- a plurality of support wheels arranged in an inline configuration between the drive wheel and the end wheel;

and

ii) an endless track disposed around the plurality of wheels for engaging the ground, the endless track comprising:

I. a top run extending between the drive wheel and the end wheel over the support wheels; and

II. a ground-engaging bottom run extending under the support wheels,

the drive wheel being in driving engagement with the endless track to impart motion to the endless track,

wherein the tracked vehicle, with the work equipment mounted to the frame, respects a vehicle height limit for travel on a public road infrastructure.

49. A tracked vehicle comprising:

a) a chassis comprising a frame extending along a longitudinal direction of the tracked vehicle, the frame comprising an equipment mounting area for mounting work equipment above the frame;

b) an operator cabin mounted to the frame, the operator cabin comprising a first seat for allowing an operator to sit and a second seat for allowing a second person to sit next to the operator in a widthwise direction of the tracked vehicle;

c) a power plant mounted to the frame and comprising a prime mover; and

d) a plurality of track assemblies for traction of the tracked vehicle, a first one of the track assemblies being on a first lateral side of the tracked vehicle, a second one of the track assemblies being on a second lateral side of the tracked vehicle, each track assembly of the plurality of track assemblies being mounted to the frame and comprising:

i) a plurality of wheels including:

- a drive wheel;
- an end wheel spaced apart from the drive wheel in the longitudinal direction of the tracked vehicle; and
- a plurality of support wheels arranged in an inline configuration between the drive wheel and the end wheel;

and

ii) an endless track disposed around the plurality of wheels for engaging the ground, the endless track comprising:

I. a top run extending between the drive wheel and the end wheel over the support wheels; and

II. a ground-engaging bottom run extending under the support wheels,

the drive wheel being in driving engagement with the endless track to impart motion to the endless track.

50. A tracked vehicle comprising:

a) a chassis comprising a frame extending along a longitudinal direction of the tracked vehicle, the frame comprising an equipment mounting area for mounting work equipment above the frame;

b) an operator cabin mounted to the frame, the operator cabin comprising a seating area for allowing an operator to sit, the seating area defining a first seat position and a second seat position along a widthwise direction of the tracked vehicle, the operator cabin comprising a roof defining a height of the tracked vehicle, the height of the tracked vehicle being no more than 2.8 m;

c) a power plant mounted to the frame and comprising a prime mover; and

d) a plurality of track assemblies for traction of the tracked vehicle, a first one of the track assemblies being on a first lateral side of the tracked vehicle, a second one of the track assemblies being on a second lateral side of the tracked vehicle, each track assembly of the plurality of track assemblies being mounted to the frame and comprising:

i) a plurality of wheels including:

- a drive wheel;
- an end wheel spaced apart from the drive wheel in the longitudinal direction of the tracked vehicle; and
- a plurality of support wheels arranged in an inline configuration between the drive wheel and the end wheel;

and

ii) an endless track disposed around the plurality of wheels for engaging the ground, the endless track comprising:

I. a top run extending between the drive wheel and the end wheel over the support wheels; and

II. a ground-engaging bottom run extending under the support wheels,

the drive wheel being in driving engagement with the endless track to impart motion to the endless track.

51. A tracked vehicle comprising:

a) a chassis comprising a frame extending along a longitudinal direction of the tracked vehicle, the frame comprising an equipment mounting area for mounting work equipment above the frame;

b) an operator cabin mounted to the frame, the operator cabin comprising:

i) a seating area for allowing an operator to sit; and

ii) a user interface for enabling the operator to control the tracked vehicle, the user interface comprising an accelerator for controlling a speed of the tracked vehicle and a steering device for steering the tracked vehicle;

the operator cabin being configurable in a plurality of cabin configurations including:

- a first cabin configuration in which the operator sits in a first seat position of the seating area along a widthwise direction of the track assembly and the steering device is in a first steering device position along the widthwise direction of the track assembly; and
- a second cabin configuration in which the operator sits in a second seat position of the seating area along the widthwise direction of the track assembly and the steering device is in a second steering device position along the widthwise direction of the track assembly,

c) a power plant mounted to the frame and comprising a prime mover; and

d) a plurality of track assemblies for traction of the tracked vehicle, a first one of the track assemblies being on a first lateral side of the tracked vehicle, a second one of the track assemblies being on a second lateral

side of the tracked vehicle, each track assembly of the plurality of track assemblies being mounted to the frame and comprising:

i) a plurality of wheels including:

- a drive wheel;
- an end wheel spaced apart from the drive wheel in the longitudinal direction of the tracked vehicle; and
- a plurality of support wheels arranged in an inline configuration between the drive wheel and the end wheel;

and

ii) an endless track disposed around the plurality of wheels for engaging the ground, the endless track comprising:

I. a top run extending between the drive wheel and the end wheel over the support wheels; and

II. a ground-engaging bottom run extending under the support wheels,

the drive wheel being in driving engagement with the endless track to impart motion to the endless track.

52. A tracked vehicle comprising:

a) a chassis comprising a frame extending along a longitudinal direction of the tracked vehicle, the frame comprising an equipment mounting area for mounting work equipment above the frame;

b) an operator cabin mounted to the frame;

c) a power plant mounted to the frame and comprising a prime mover; and

d) a plurality of track assemblies for traction of the tracked vehicle, a first one of the track assemblies being on a first lateral side of the tracked vehicle, a second one of the track assemblies being on a second lateral side of the tracked vehicle, each track assembly of the plurality of track assemblies being mounted to the frame and comprising:

i) a plurality of wheels including:

- a drive wheel;

- an end wheel spaced apart from the drive wheel in the longitudinal direction of the tracked vehicle; and
- a plurality of support wheels arranged in an inline configuration between the drive wheel and the end wheel, each support wheel occupying a majority of a height of the track assembly and comprising:
  - a first support wheel member rotatable on an axle of the support wheel and having a circumference of the support wheel; and
  - a second support wheel member rotatable on the axle of the support wheel and having the circumference of the support wheel, the second support wheel member being installable in and removable from the track assembly separately from the first support wheel member;

and

ii) an endless track disposed around the plurality of wheels for engaging the ground, the endless track comprising:

I. a top run extending between the drive wheel and the end wheel over the support wheels; and

II. a ground-engaging bottom run extending under the support wheels,

the drive wheel being in driving engagement with the endless track to impart motion to the endless track.

53. A tracked vehicle comprising:

a) a chassis comprising a frame extending along a longitudinal direction of the tracked vehicle, the frame comprising a pair of side rails spaced apart in a widthwise direction of the tracked vehicle for mounting work equipment carried by the tracked vehicle to the side rails, a spacing of the side rails in the widthwise direction of the tracked vehicle corresponding to a standard truck frame side rail spacing;

b) an operator cabin mounted to the frame;

c) a power plant mounted to the frame and comprising a prime mover; and

d) a plurality of track assemblies for traction of the tracked vehicle, a first one of the track assemblies being on a first side of the tracked vehicle, a second one of the track assemblies being on a second side of the tracked vehicle, each track assembly of the plurality of track assemblies being mounted to the frame and comprising:

i) a plurality of wheels including:

- a drive wheel;
- an end wheel spaced apart from the drive wheel in the longitudinal direction of the tracked vehicle; and
- a plurality of support wheels arranged in an inline configuration between the drive wheel and the end wheel;

and

ii) an endless track disposed around the plurality of wheels for engaging the ground, the endless track comprising:

I. a top run extending between the drive wheel and the end wheel over the support wheels; and

II. a ground-engaging bottom run extending under the support wheels,

the drive wheel being in driving engagement with the endless track to impart motion to the endless track.

54. A tracked vehicle comprising:

a) a chassis comprising a frame extending along a longitudinal direction of the tracked vehicle, the frame comprising a pair of side rails spaced apart in a widthwise direction of the tracked vehicle for mounting work equipment carried by the tracked vehicle to the side rails, a spacing of the side rails in the widthwise direction of the tracked vehicle being no greater than 34 inches;

b) an operator cabin mounted to the frame;

c) a power plant mounted to the frame and comprising a prime mover; and

d) a plurality of track assemblies for traction of the tracked vehicle, a first one of the track assemblies being on a first side of the tracked vehicle, a second one of the track assemblies being on a second side of the tracked vehicle, each track assembly of the plurality of track assemblies being mounted to the frame and comprising:

i) a plurality of wheels including:

- a drive wheel;
- an end wheel spaced apart from the drive wheel in the longitudinal direction of the tracked vehicle; and
- a plurality of support wheels arranged in an inline configuration between the drive wheel and the end wheel;

and

ii) an endless track disposed around the plurality of wheels for engaging the ground, the endless track comprising:

I. a top run extending between the drive wheel and the end wheel over the support wheels; and

II. a ground-engaging bottom run extending under the support wheels,

the drive wheel being in driving engagement with the endless track to impart motion to the endless track.

55. A tracked vehicle comprising:

a) a chassis comprising a frame extending along a longitudinal direction of the tracked vehicle, the frame comprising:

i) an upper frame structure including a pair of side rails spaced apart in a widthwise direction of the tracked vehicle for mounting work equipment carried by the tracked vehicle to the side rails; and

ii) a lower frame structure below the upper frame structure;

the frame defining a vertical gap between the upper frame structure and the lower frame structure; and

b) an operator cabin mounted to the frame;

c) a power plant mounted to the frame and comprising a prime mover; and

d) a plurality of track assemblies for traction of the tracked vehicle, a first one of the track assemblies being on a first side of the tracked vehicle, a second one of the track assemblies being on a second side of the tracked vehicle, each track assembly of the plurality of track assemblies being mounted to the frame and comprising:

i) a plurality of wheels including:

- a drive wheel;
- an end wheel spaced apart from the drive wheel in the longitudinal direction of the tracked vehicle; and
- a plurality of support wheels arranged in an inline configuration between the drive wheel and the end wheel;

and

ii) an endless track disposed around the plurality of wheels for engaging the ground, the endless track comprising:

I. a top run extending between the drive wheel and the end wheel over the support wheels; and

II. a ground-engaging bottom run extending under the support wheels,

the drive wheel being in driving engagement with the endless track to impart motion to the endless track.

56. A tracked vehicle comprising:

a) a chassis comprising a frame extending along a longitudinal direction of the tracked vehicle;

b) an operator cabin mounted to the frame;

c) a power plant mounted to the frame, the power plant comprising a prime mover and a hydraulic drive system connected to the prime mover; and

d) a plurality of track assemblies for traction of the tracked vehicle, a first one of the track assemblies being on a first lateral side of the tracked

vehicle, a second one of the track assemblies being on a second lateral side of the tracked vehicle, each track assembly being mounted to the frame and comprising:

i) a plurality of wheels including:
   - a drive wheel; and
   - an end wheel spaced apart from the drive wheel in the longitudinal direction of the tracked vehicle;

ii) an endless track disposed around the plurality of wheels for engaging the ground, the endless track comprising:
   I. a top run extending over the plurality of wheels; and
   II. a ground-engaging bottom run extending under the plurality of wheels,

   the drive wheel being in driving engagement with the endless track to impart motion to the endless track;
   and

iii) a track tensioner for maintaining tension in the endless track, the track tensioner comprising a hydraulic actuator hydraulically connected to the hydraulic drive system.

57. A tracked vehicle comprising:

a) a chassis comprising a frame extending along a longitudinal direction of the tracked vehicle;

b) an operator cabin mounted to the frame;

c) a power plant mounted to the frame and comprising a prime mover; and

d) a plurality of track assemblies for traction of the tracked vehicle, a first one of the track assemblies being on a first side of the tracked vehicle, a second one of the track assemblies being on a second side of the tracked vehicle, each track assembly of the plurality of track assemblies being mounted to the frame and comprising:

   i) a plurality of wheels including:
      - a drive wheel;

- a rear wheel spaced apart from the drive wheel in the longitudinal direction of the tracked vehicle; and
- a plurality of support wheels arranged in an inline configuration between the drive wheel and the rear wheel;

the rear wheel and a rearmost one of the support wheels overlapping in the longitudinal direction of the tracked vehicle; and

ii) an endless track disposed around the plurality of wheels for engaging the ground, the endless track comprising:

I. a top run extending between the drive wheel and the rear wheel over the support wheels; and

II. a ground-engaging bottom run extending under the support wheels,

the drive wheel being in driving engagement with the endless track to impart motion to the endless track.

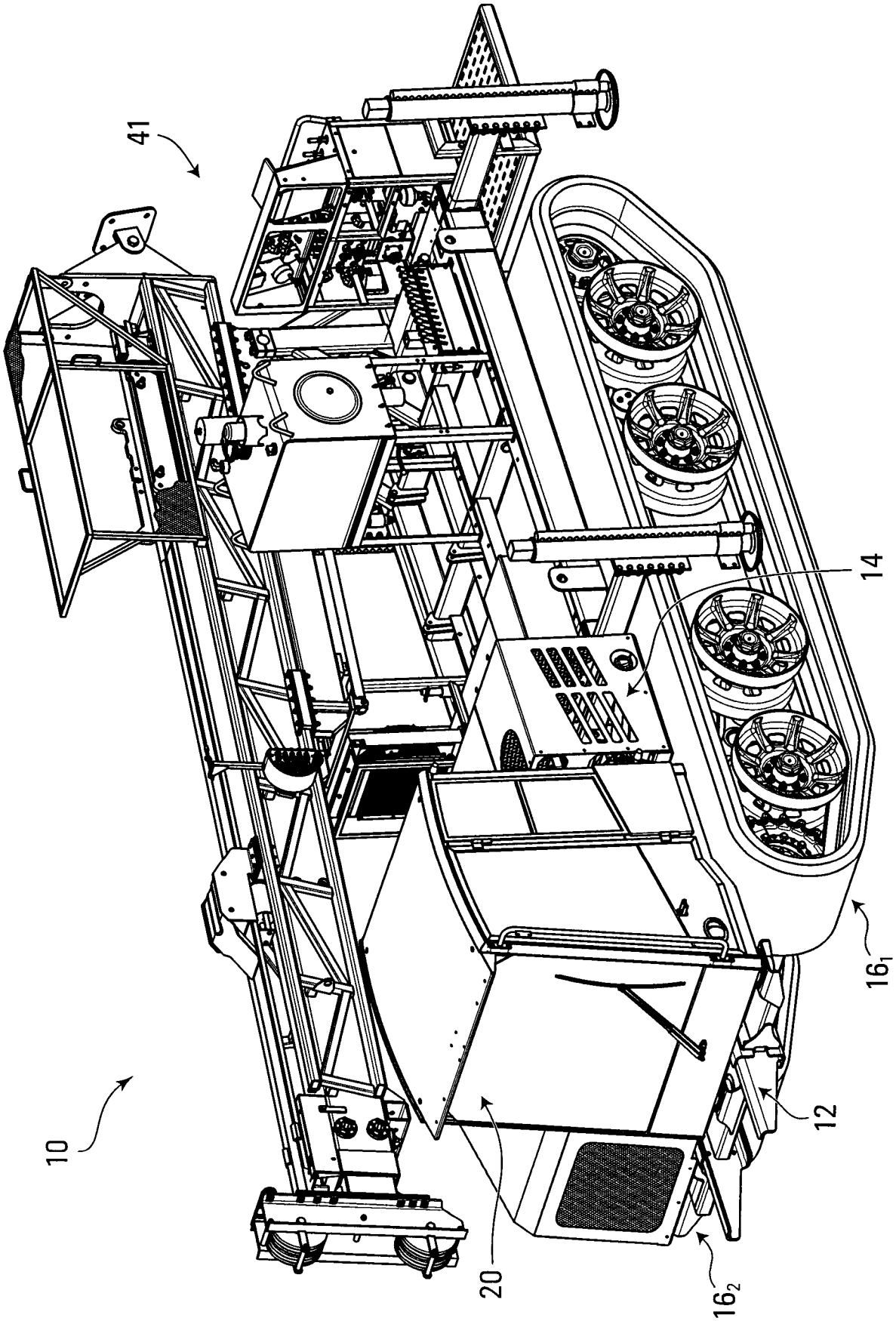

FIG. 1

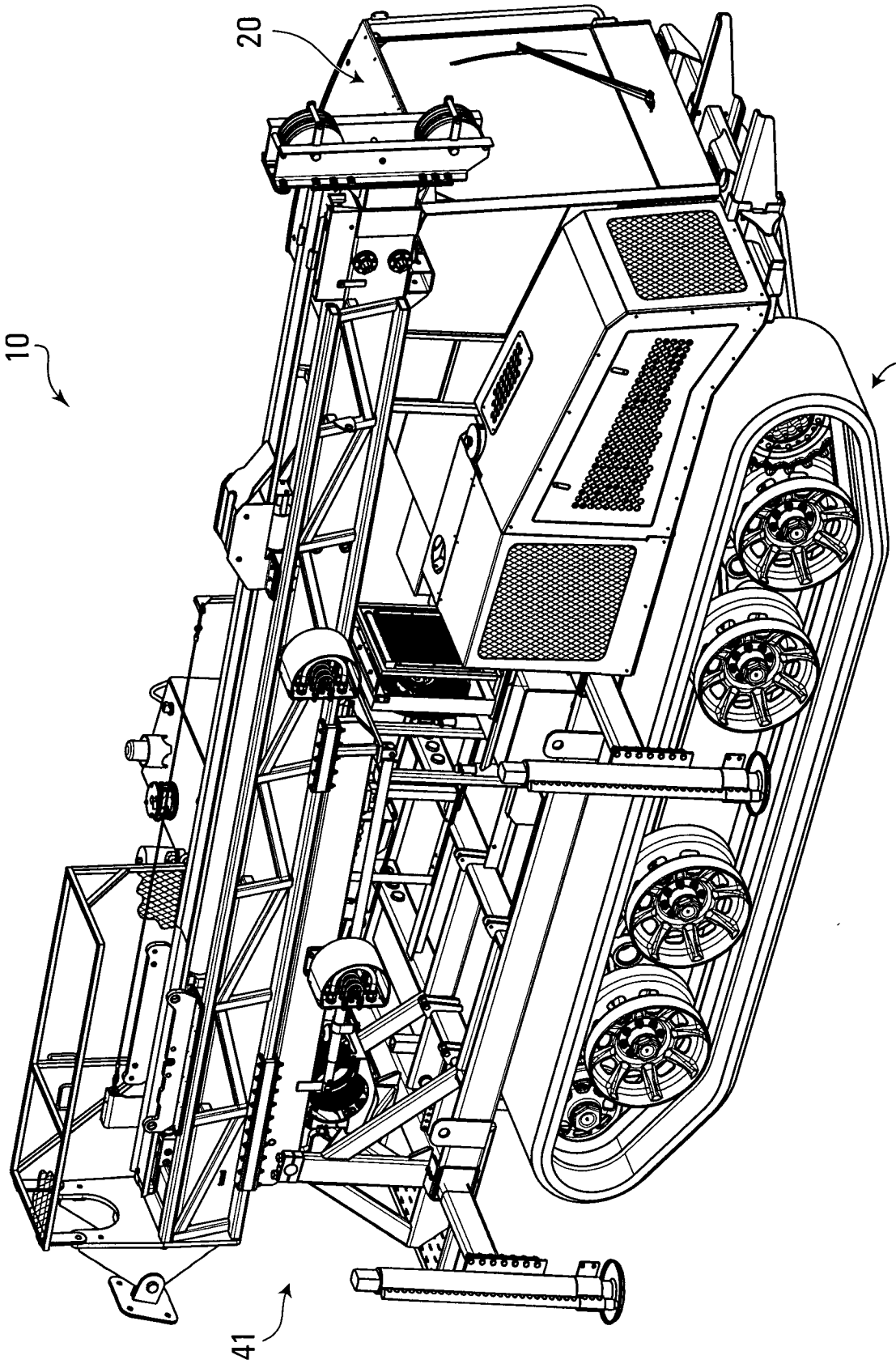

FIG. 2

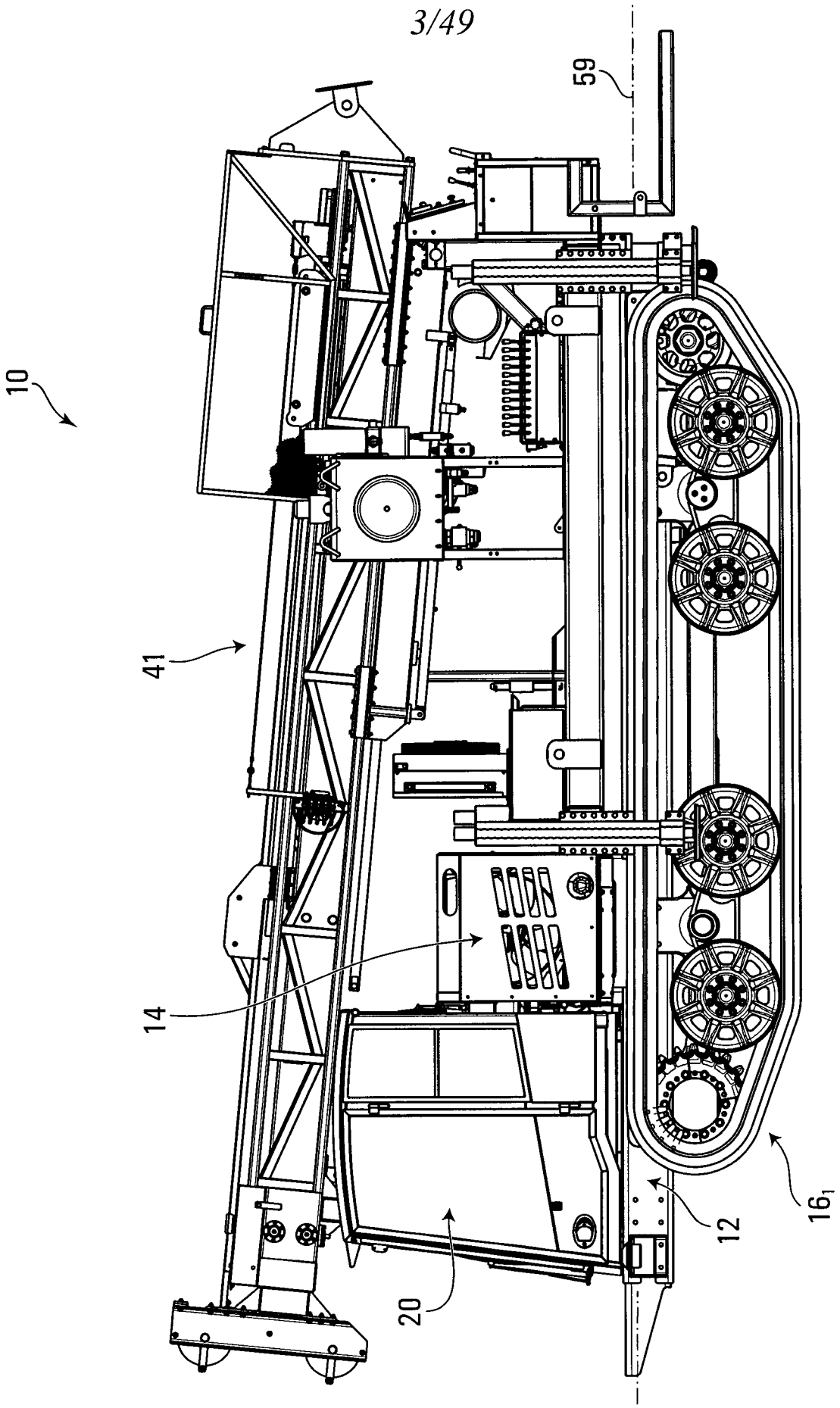

FIG. 3

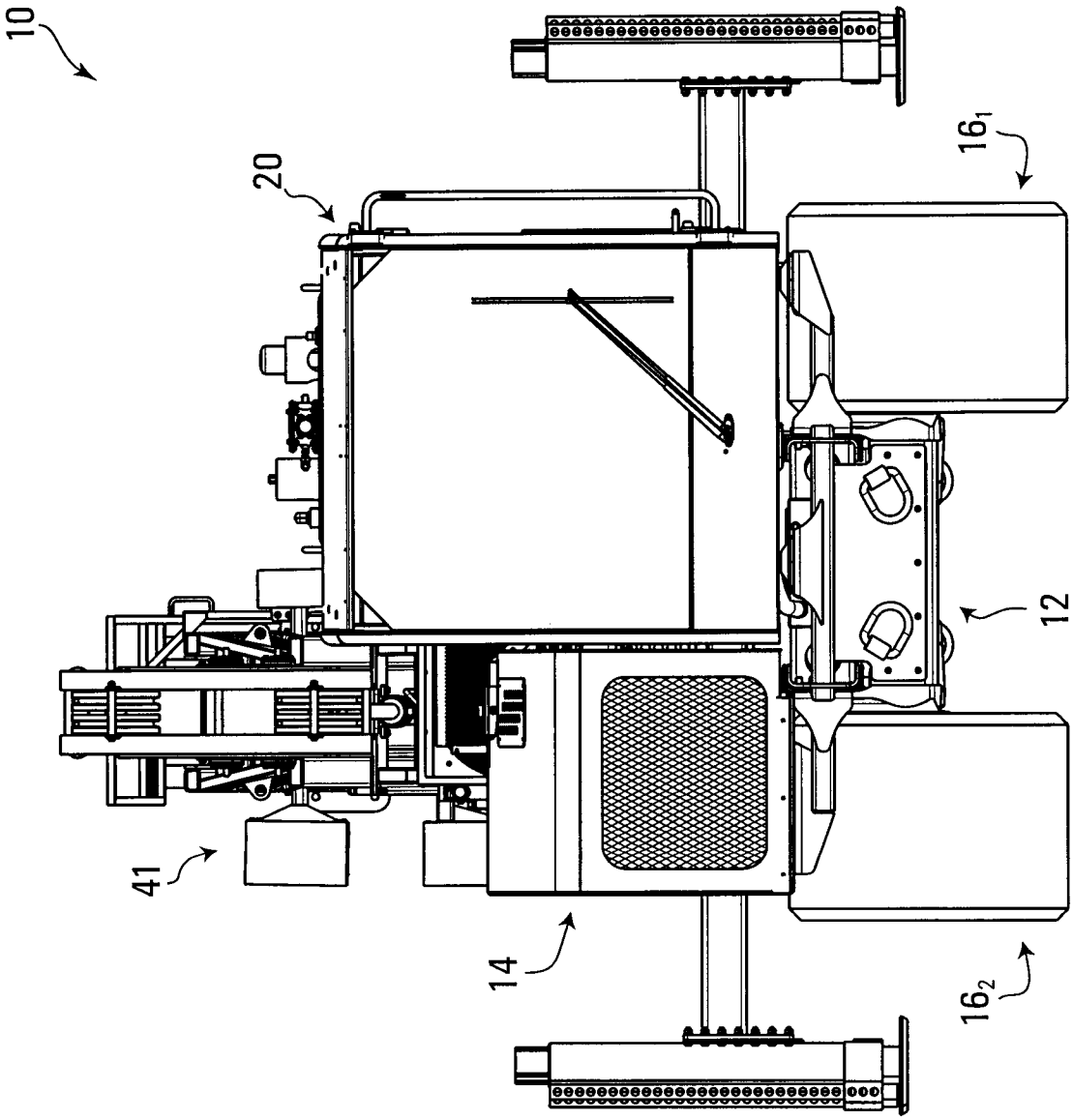

FIG. 4

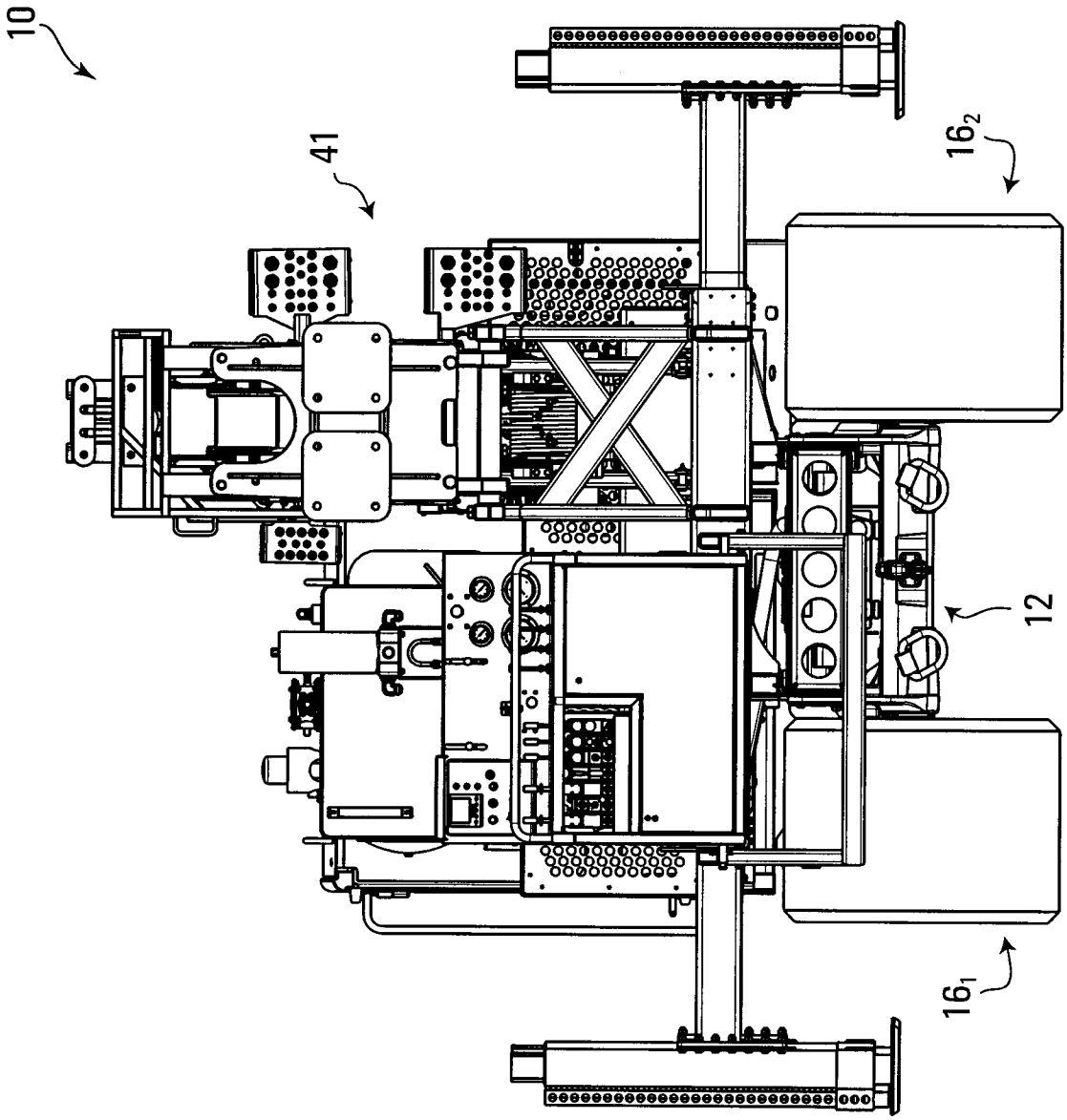

FIG. 5

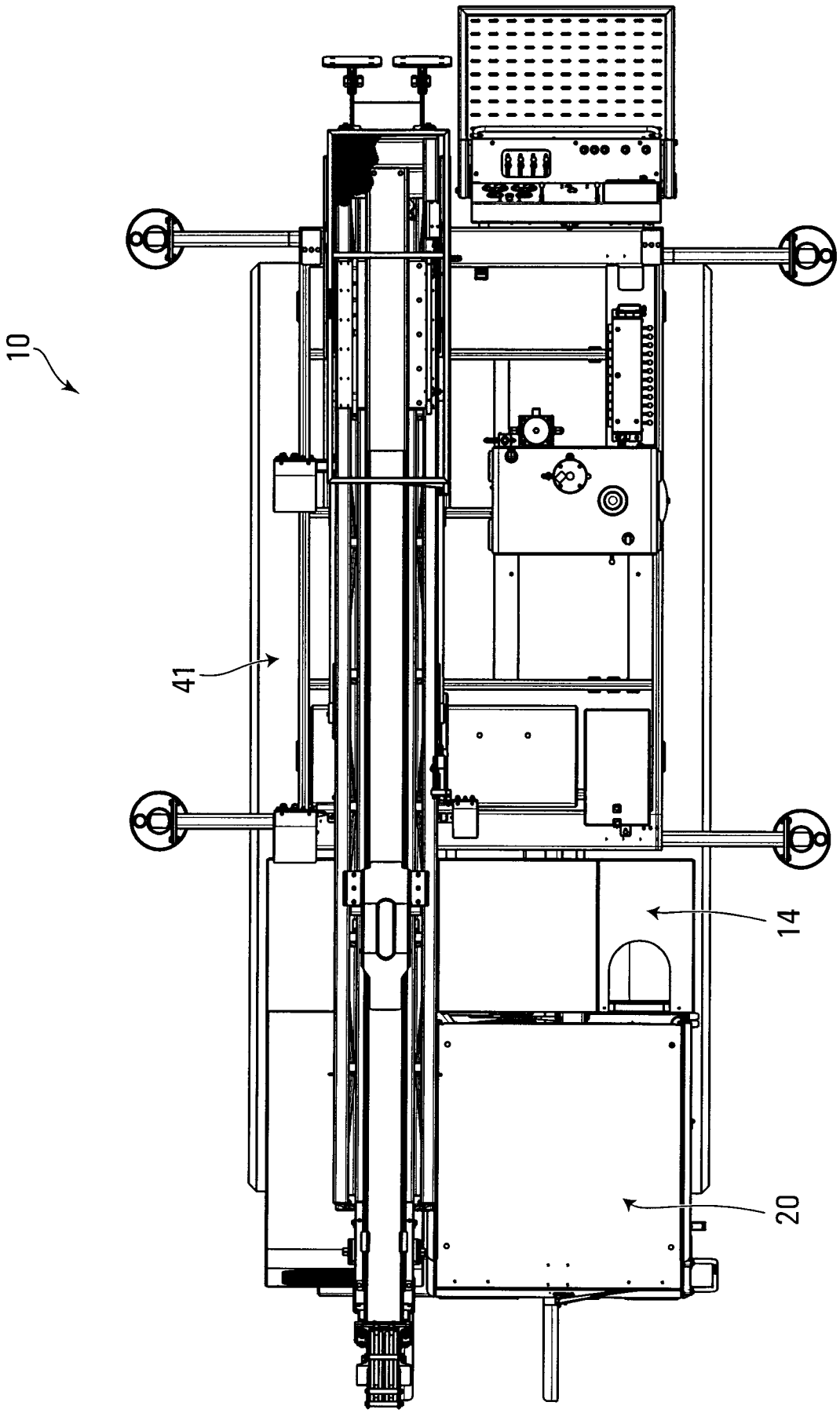

FIG. 6

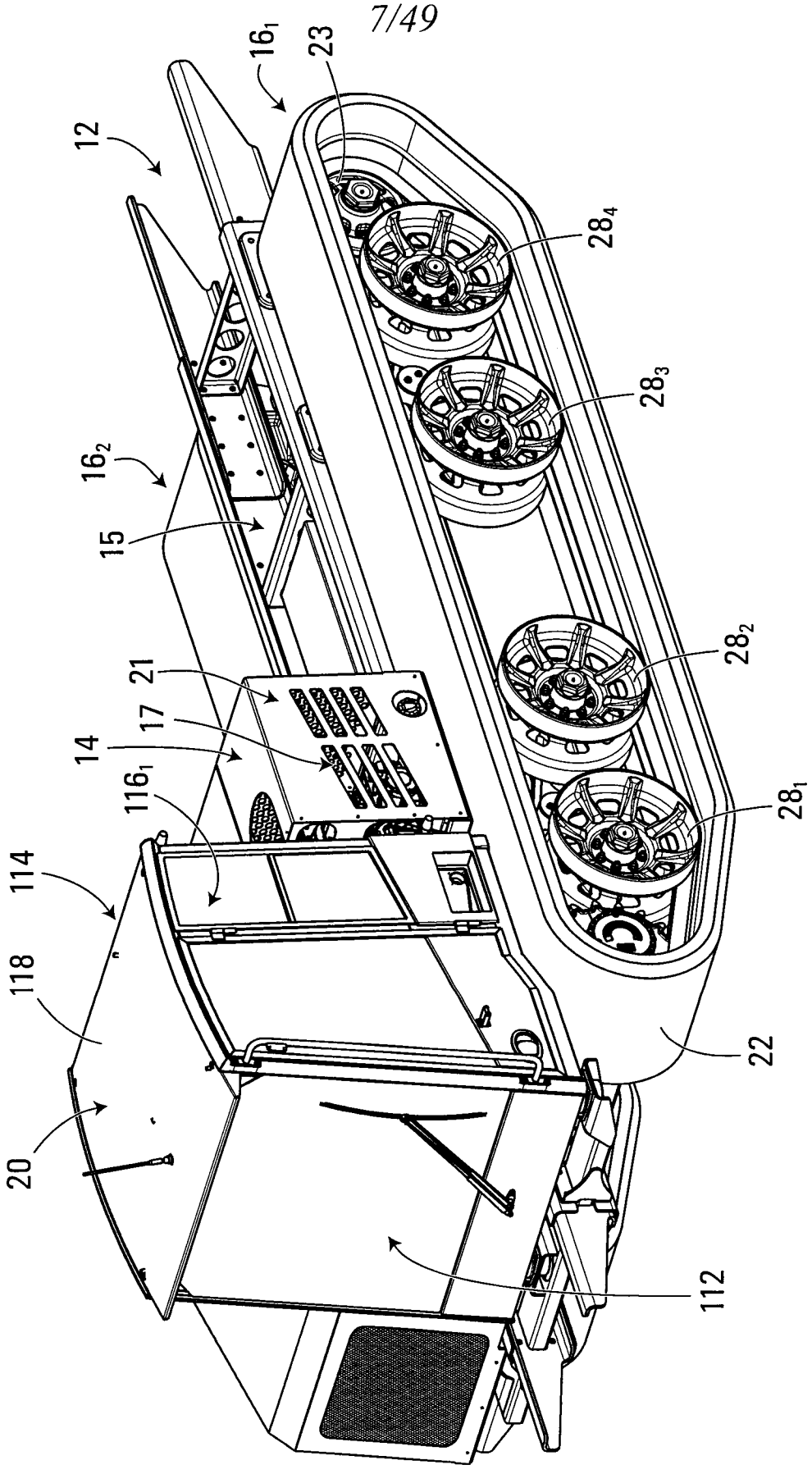

FIG. 7

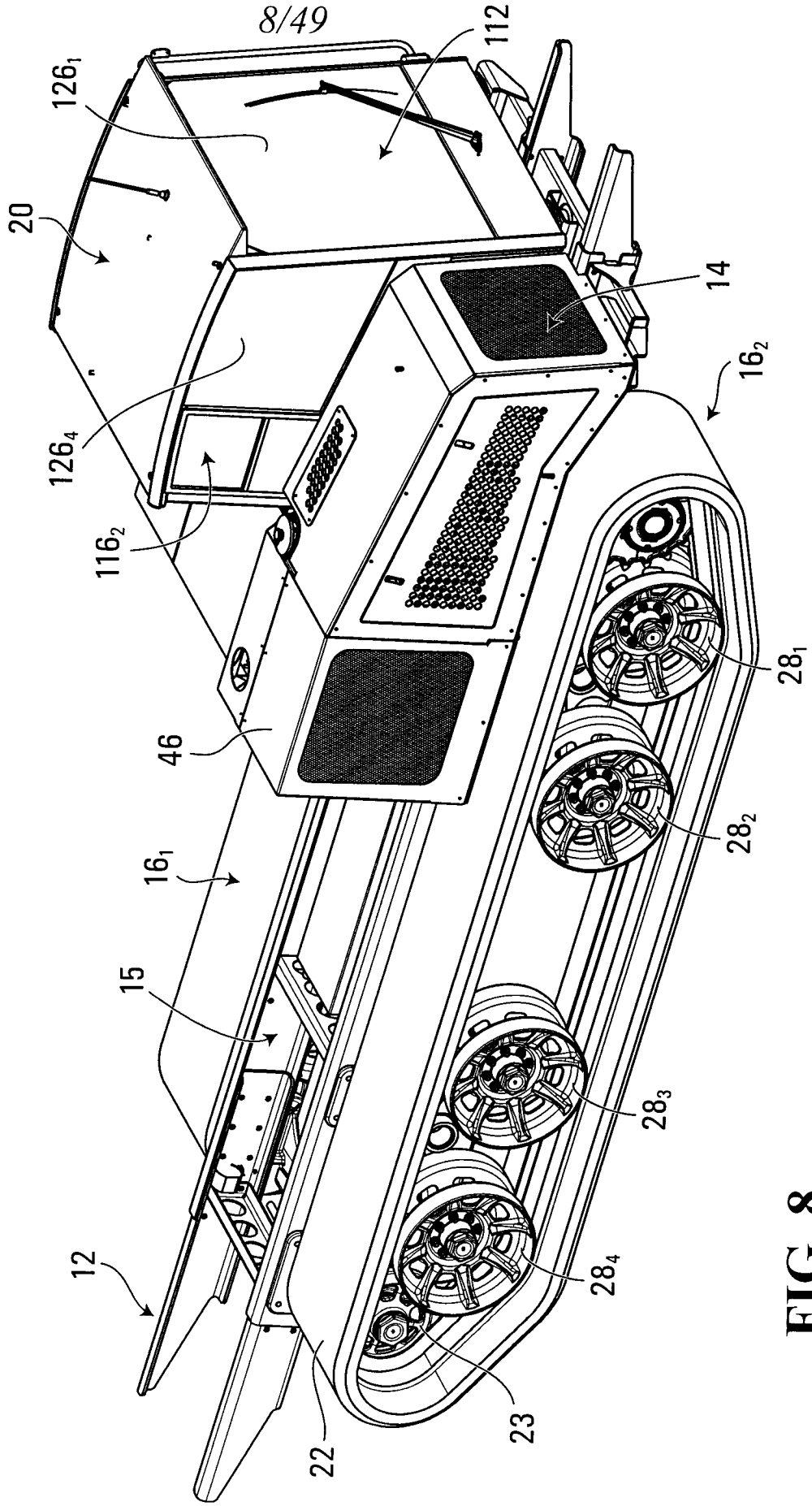

FIG. 8

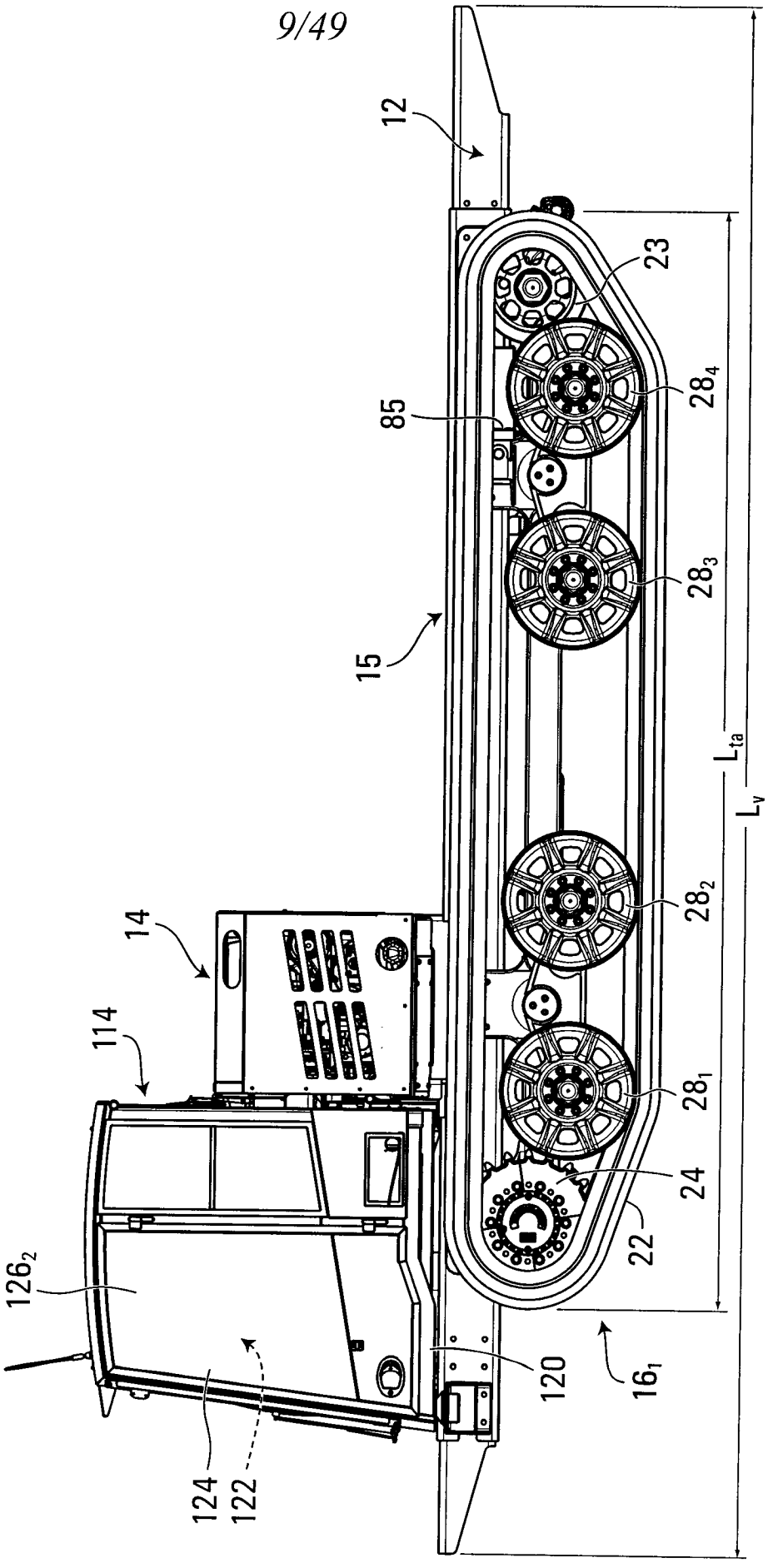
12
23
28_4
85
28_3
15
28_2
28_1
24
22
16_1
120
126_2
14
114
124
122
L_{ta}
L_v

FIG. 9

FIG. 10

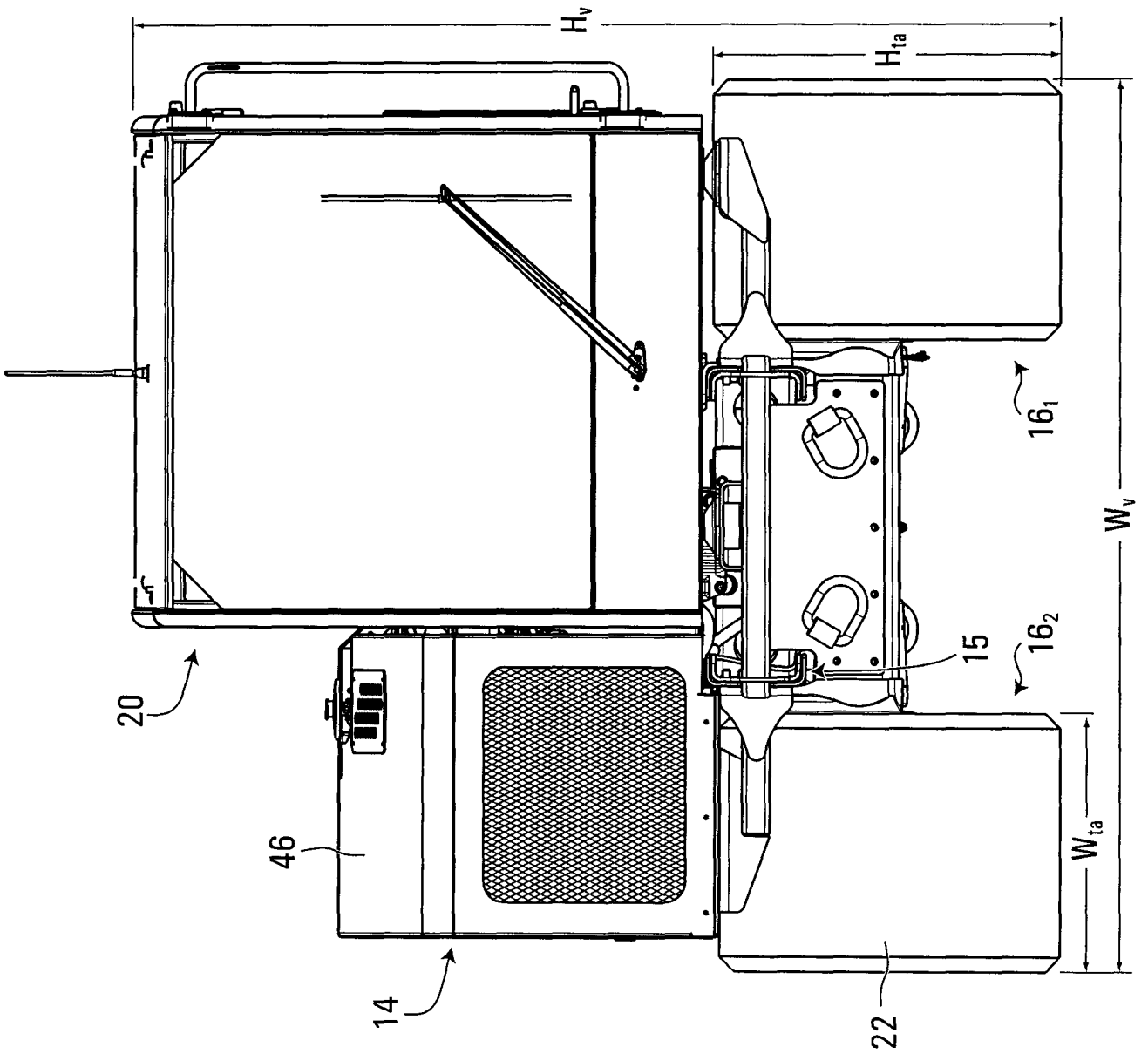

FIG. 11

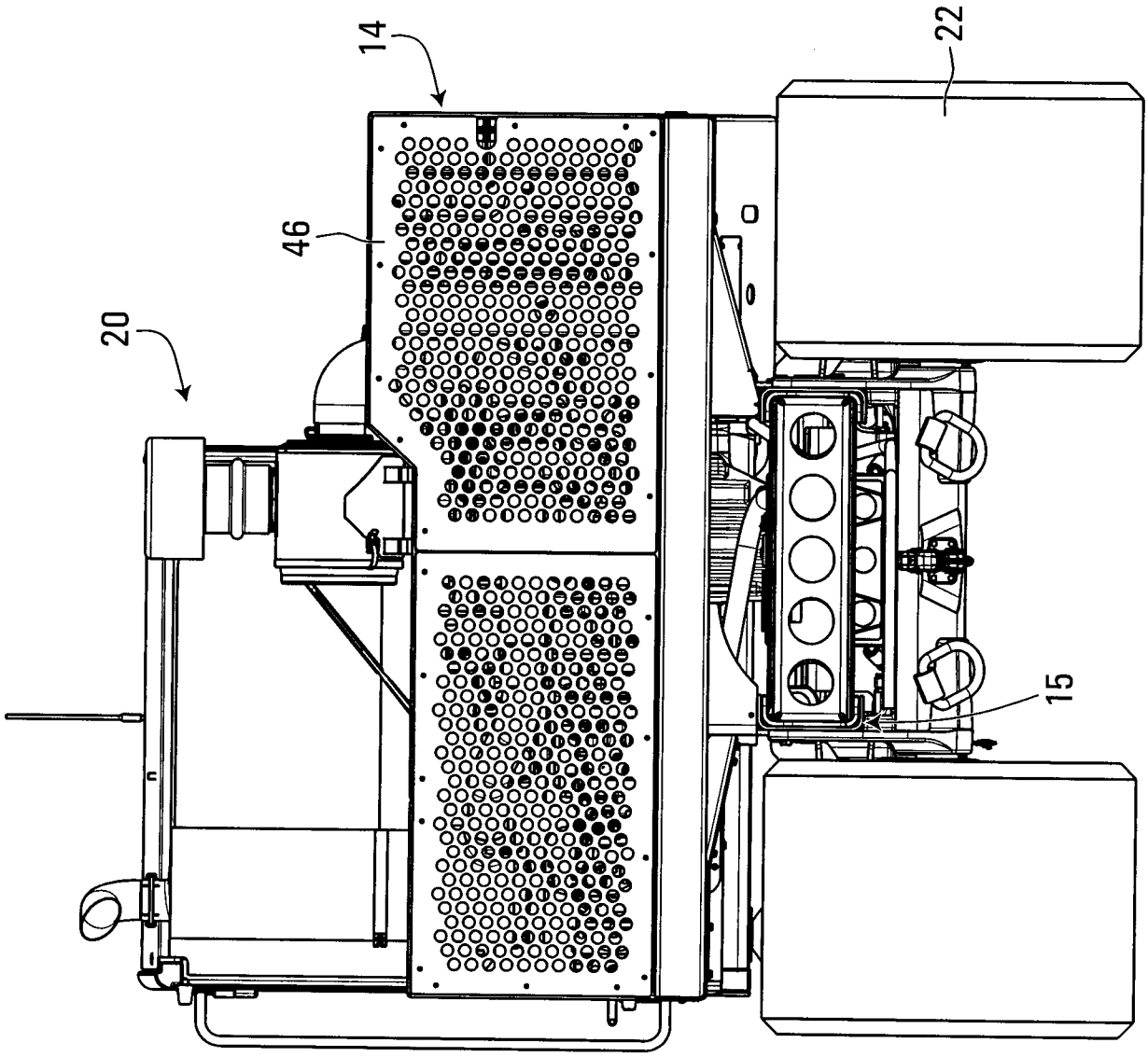

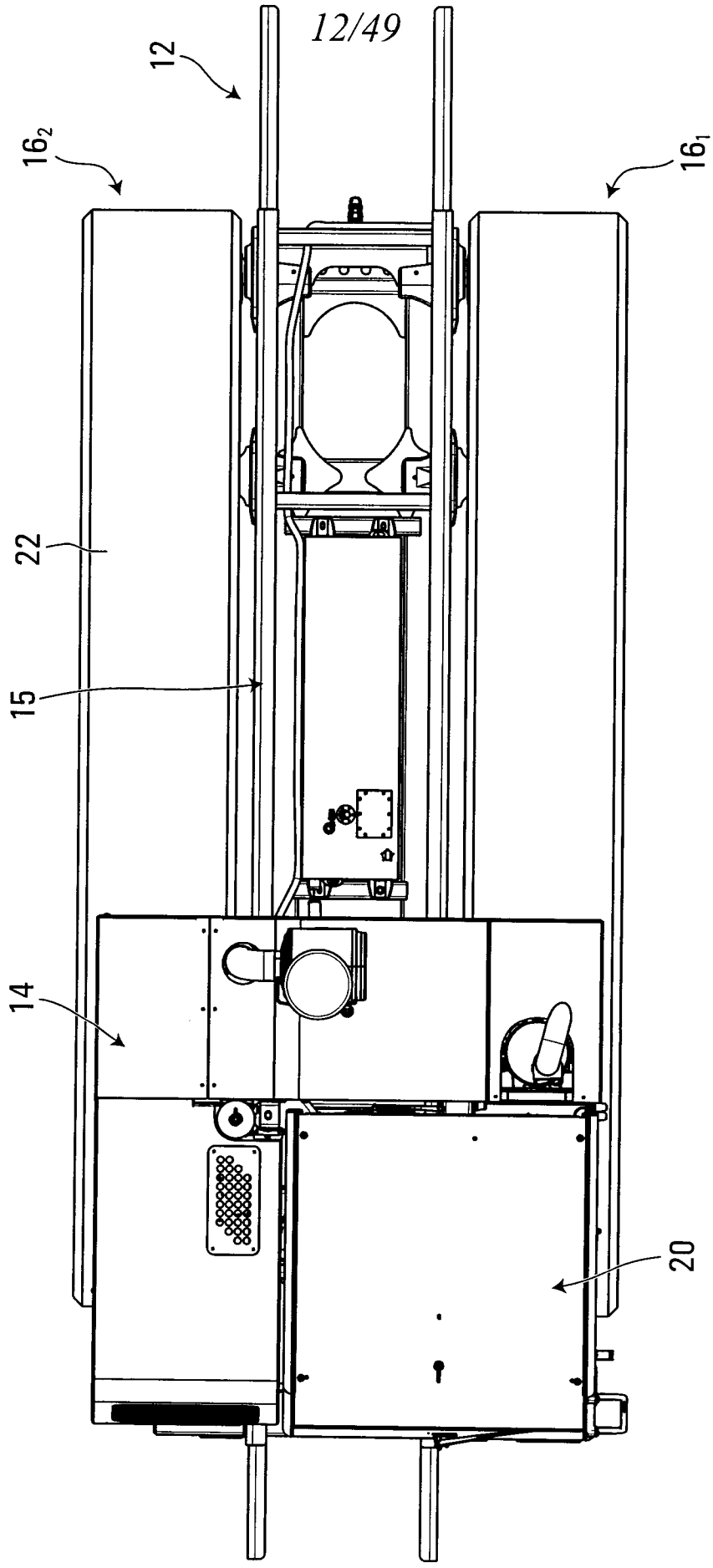

FIG. 12

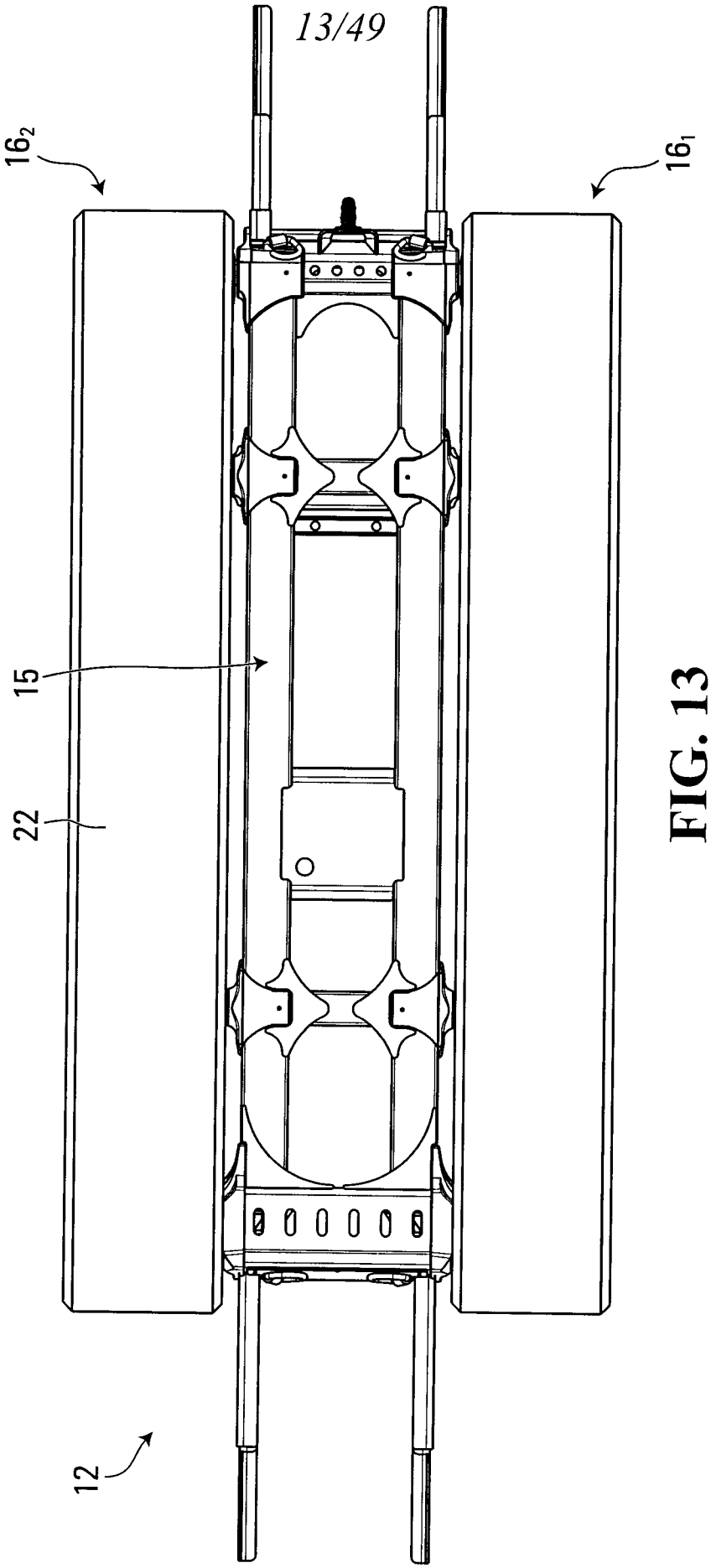

FIG. 13

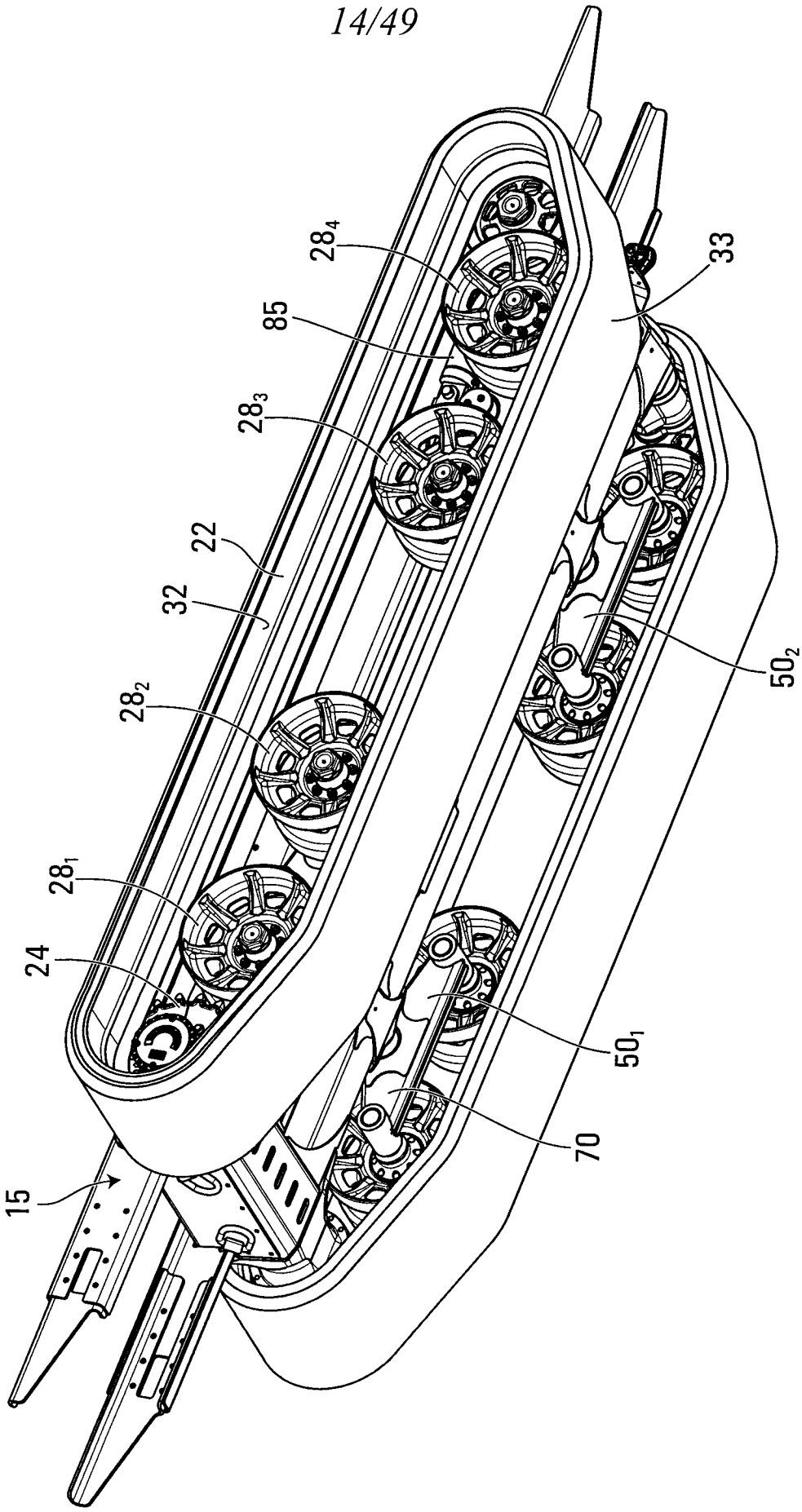

FIG. 14

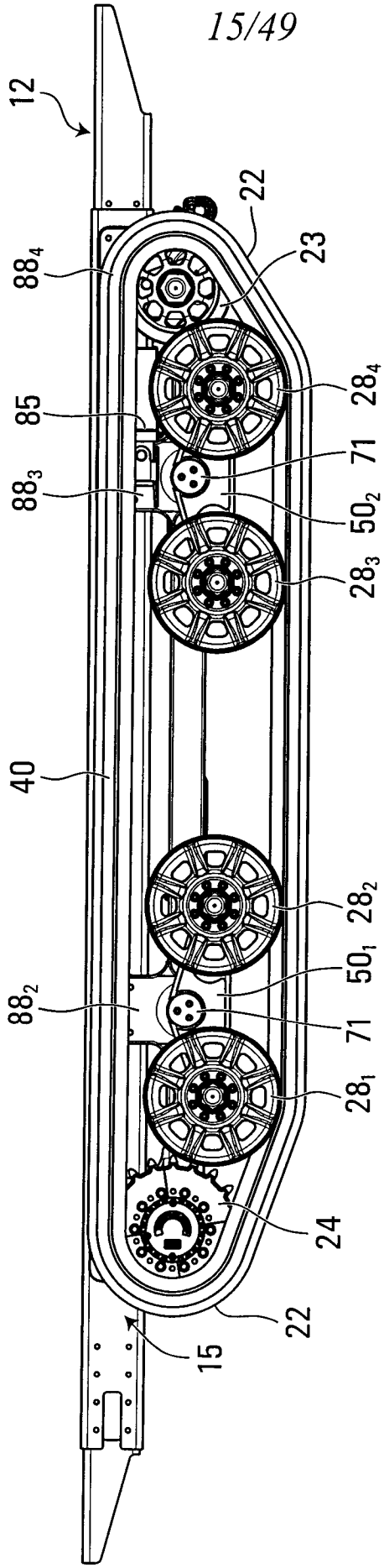

FIG. 15

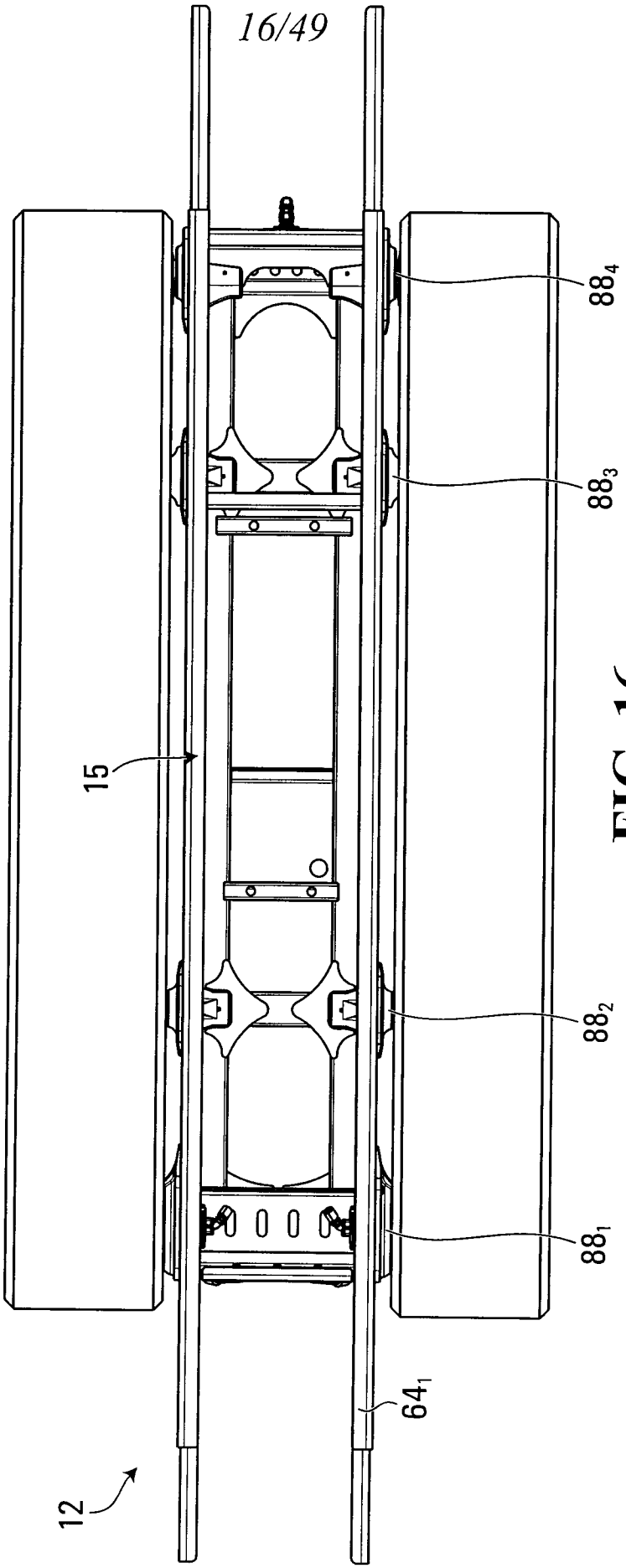

FIG. 16

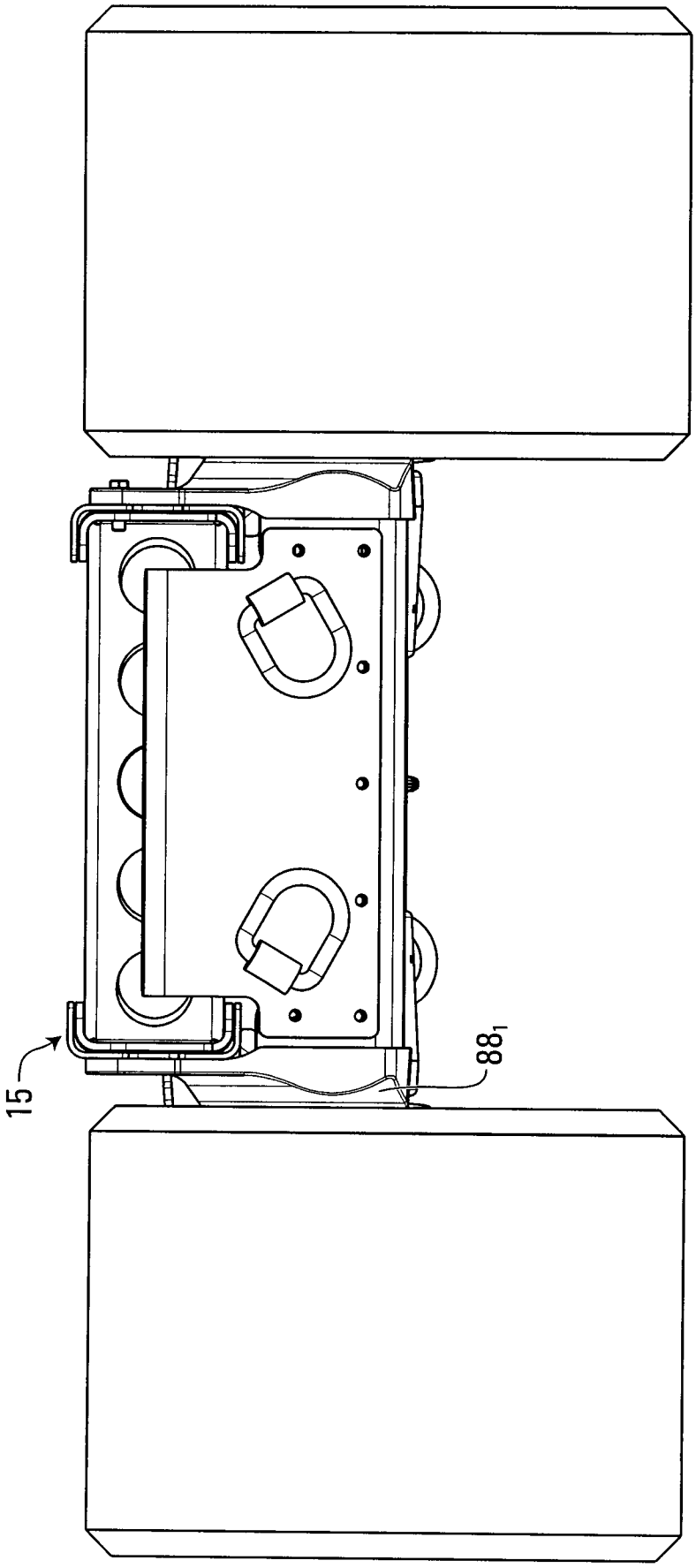

FIG. 17

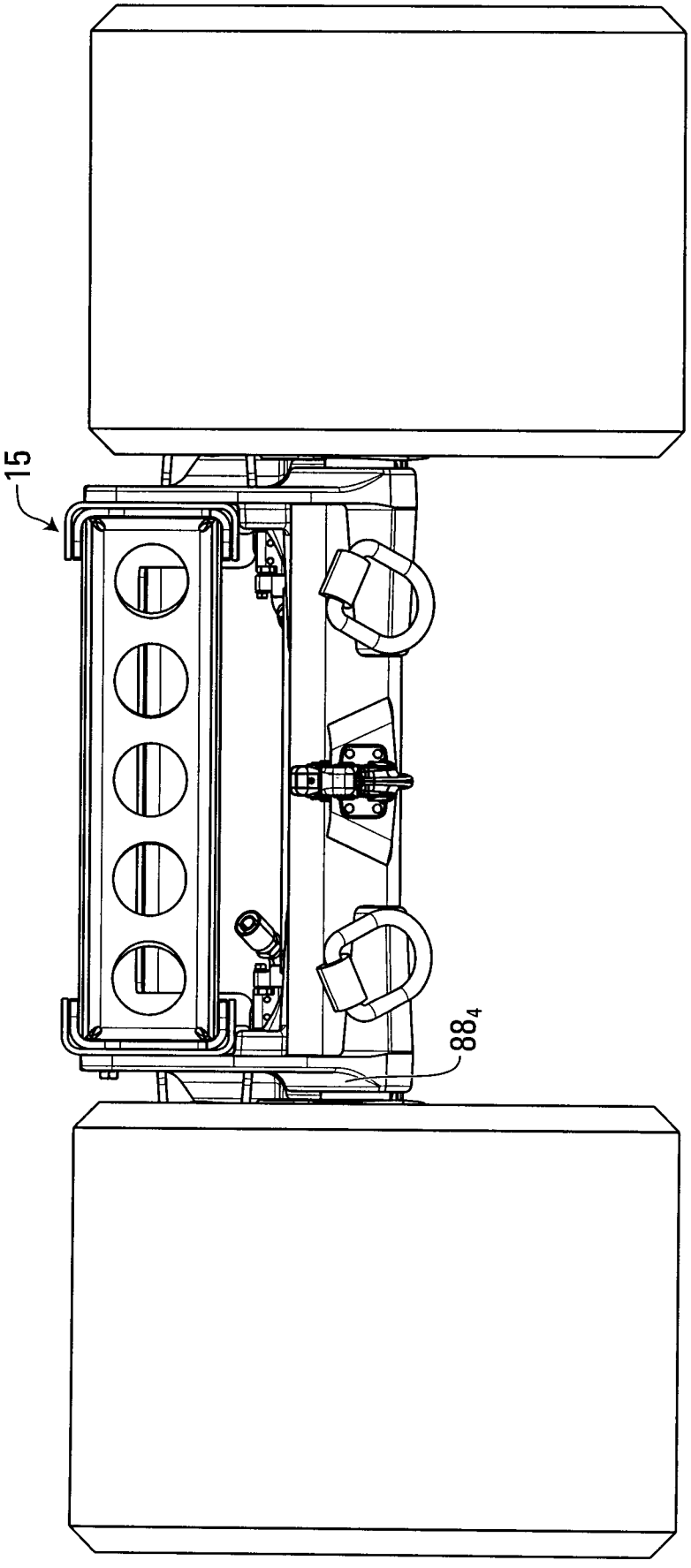

FIG. 18

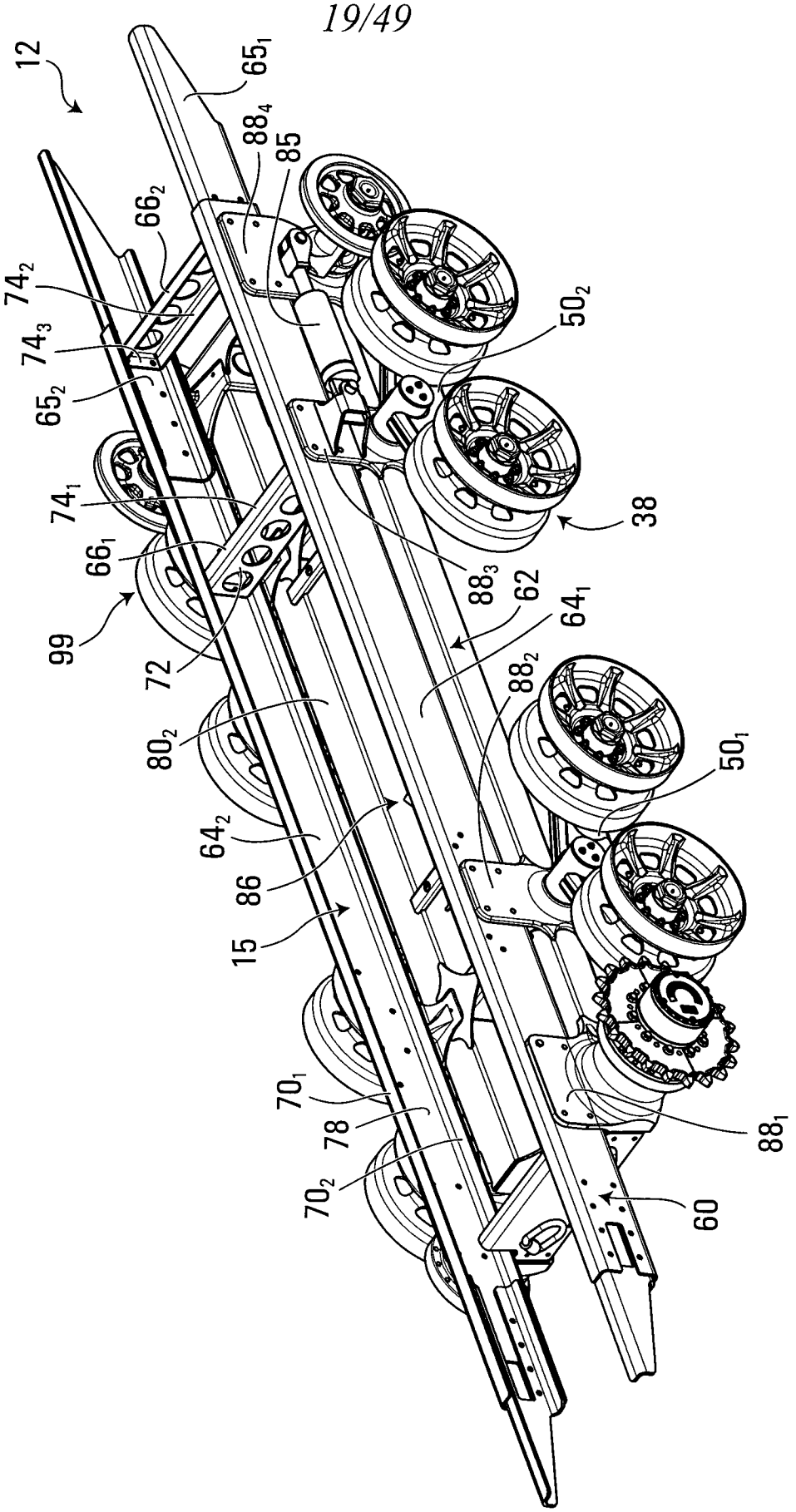
12
65_1
88_4
85
66_2
74_2
74_3
65_2
74_1
66_1
99
72
80_2
64_2
86
15
70_1
78
70_2
50_2
38
88_3
62
64_1
88_2
50_1
88_1
60

FIG. 19

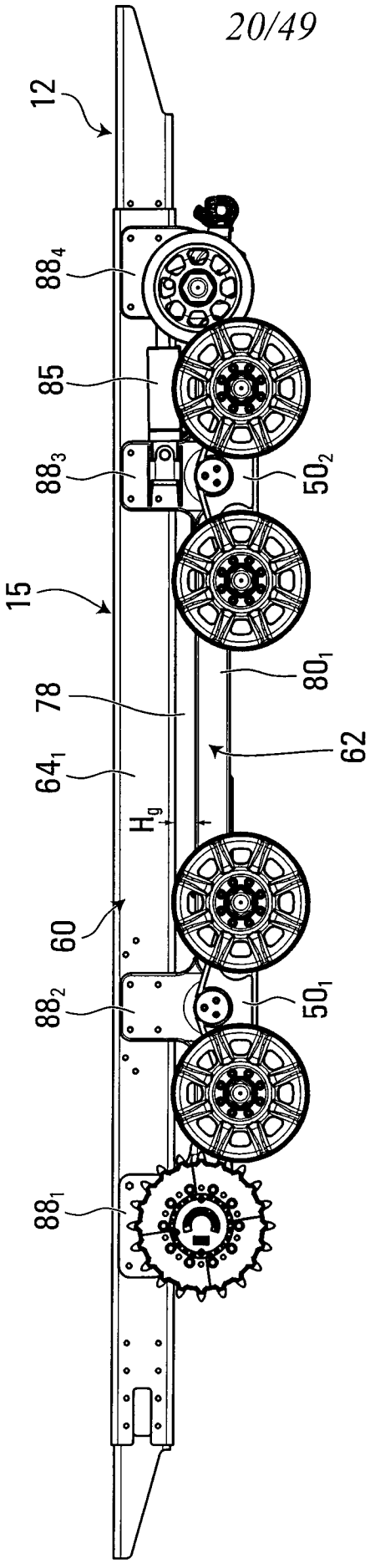

FIG. 20

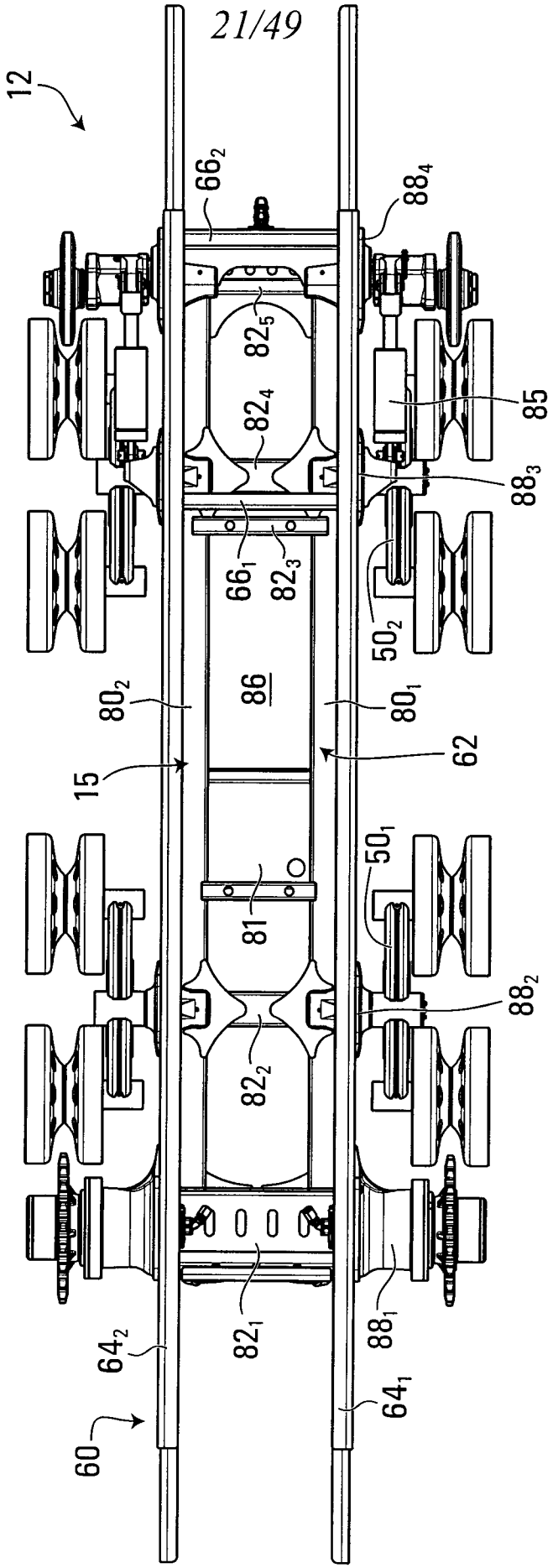
12
66_2
88_4
82_5
82_4
85
88_3
66_1
82_3
50_2
80_2
86
80_1
15
62
50_1
81
88_2
82_2
82_1
88_1
64_2
64_1
60

FIG. 21

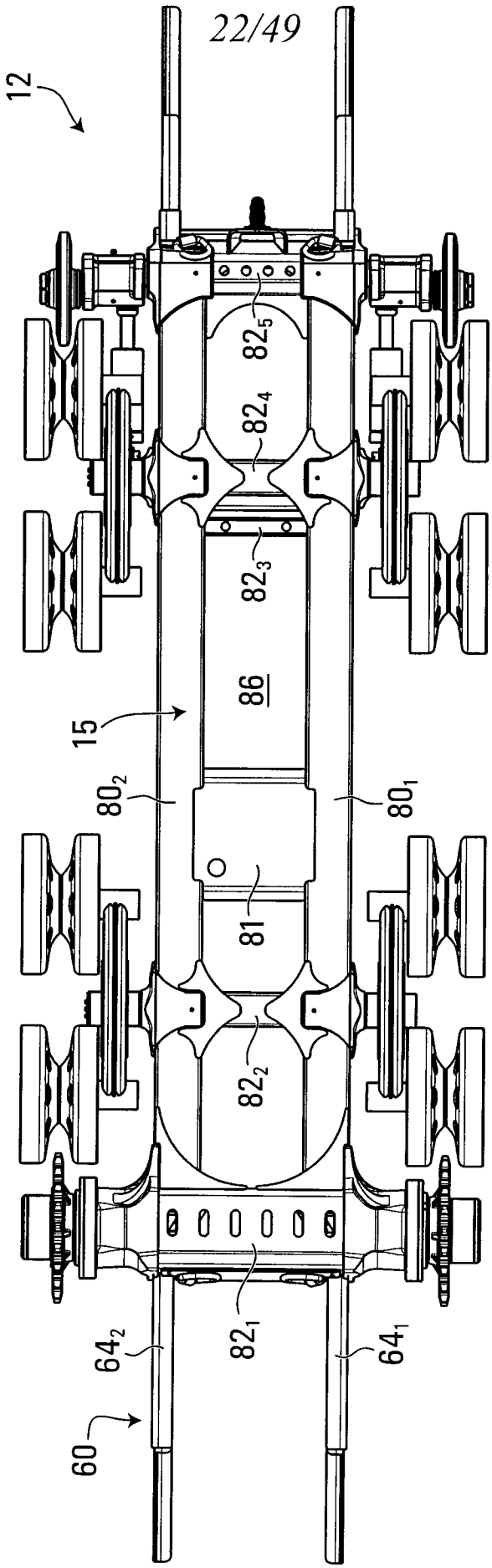

FIG. 22

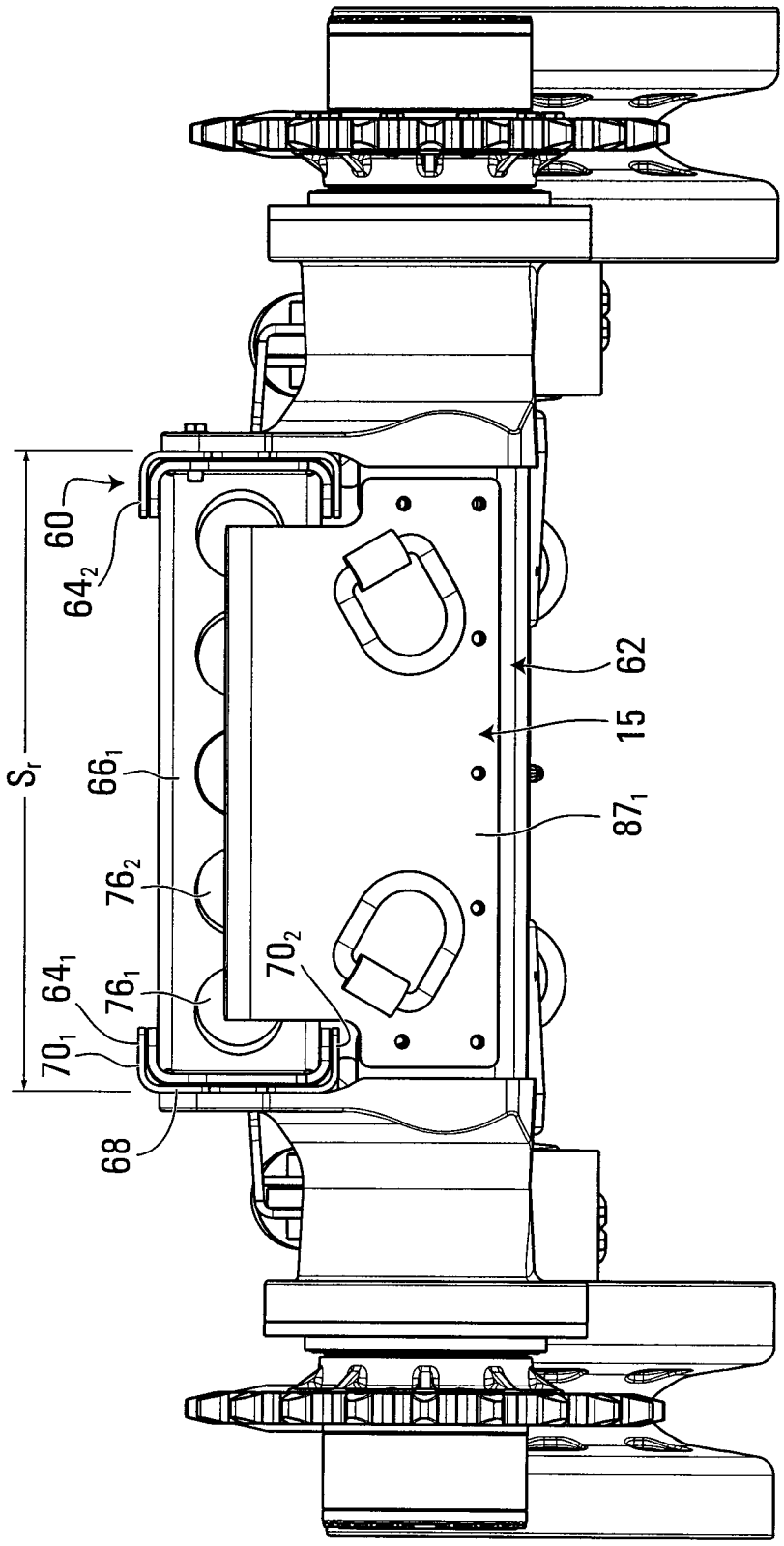

FIG. 23

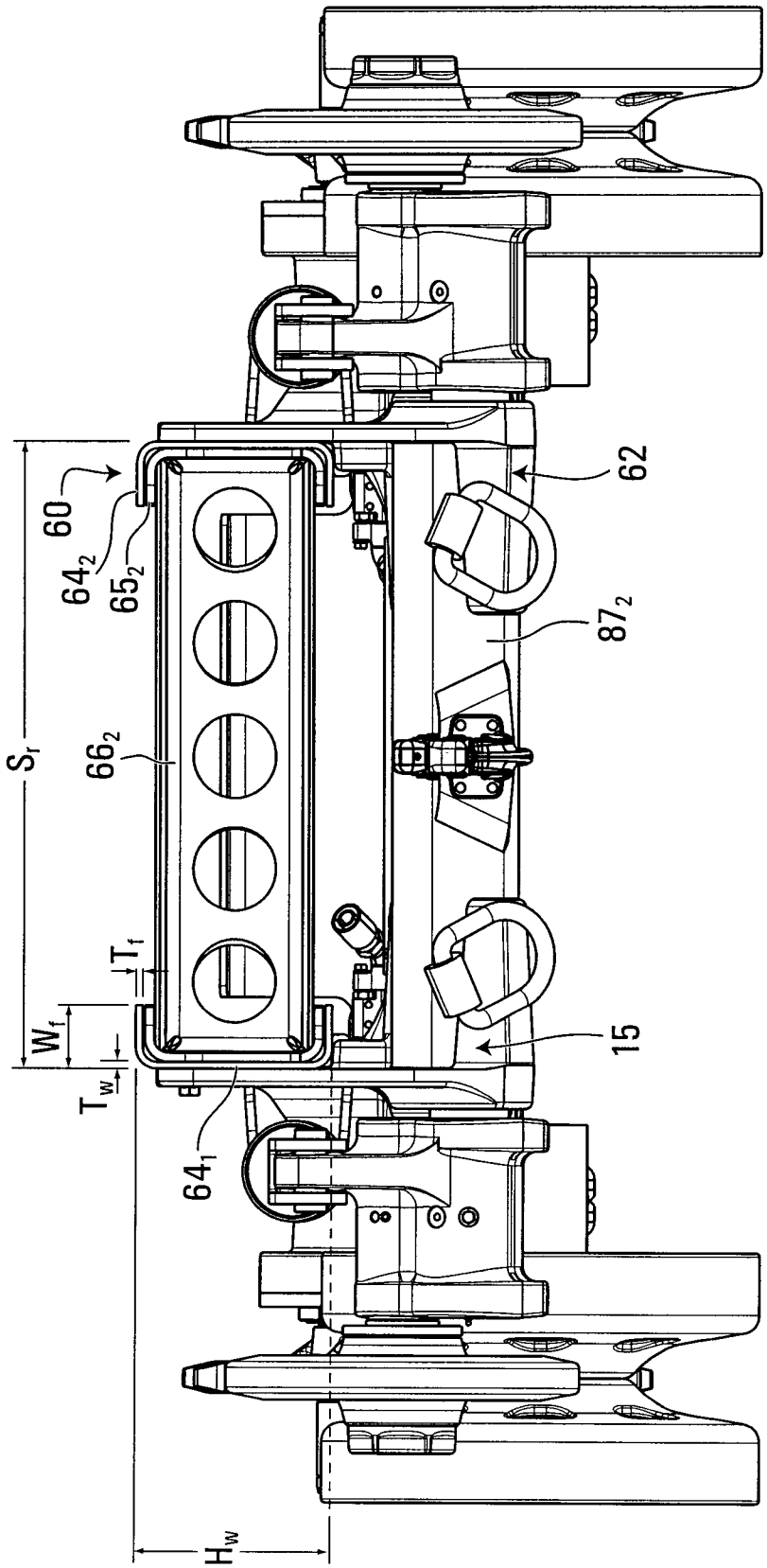

FIG. 24

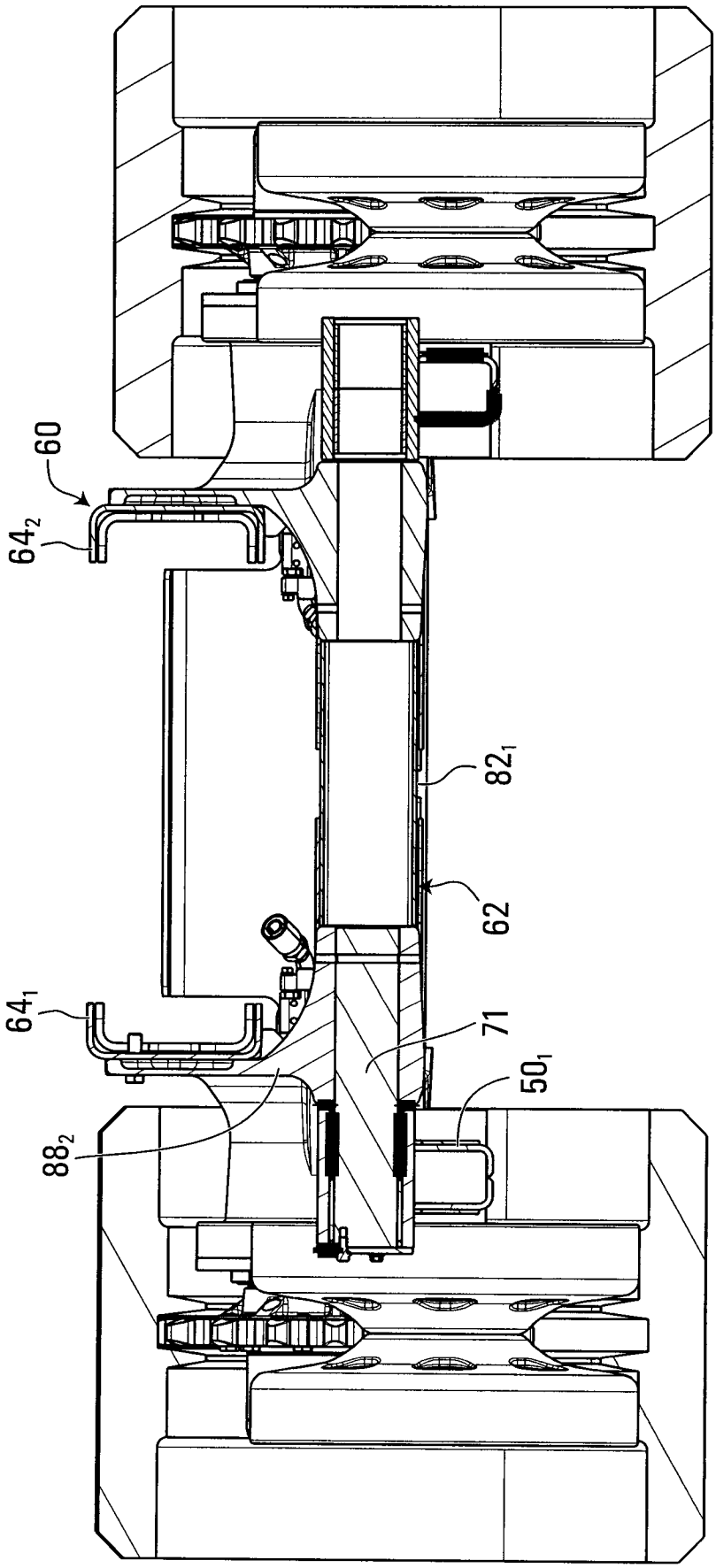

FIG. 25

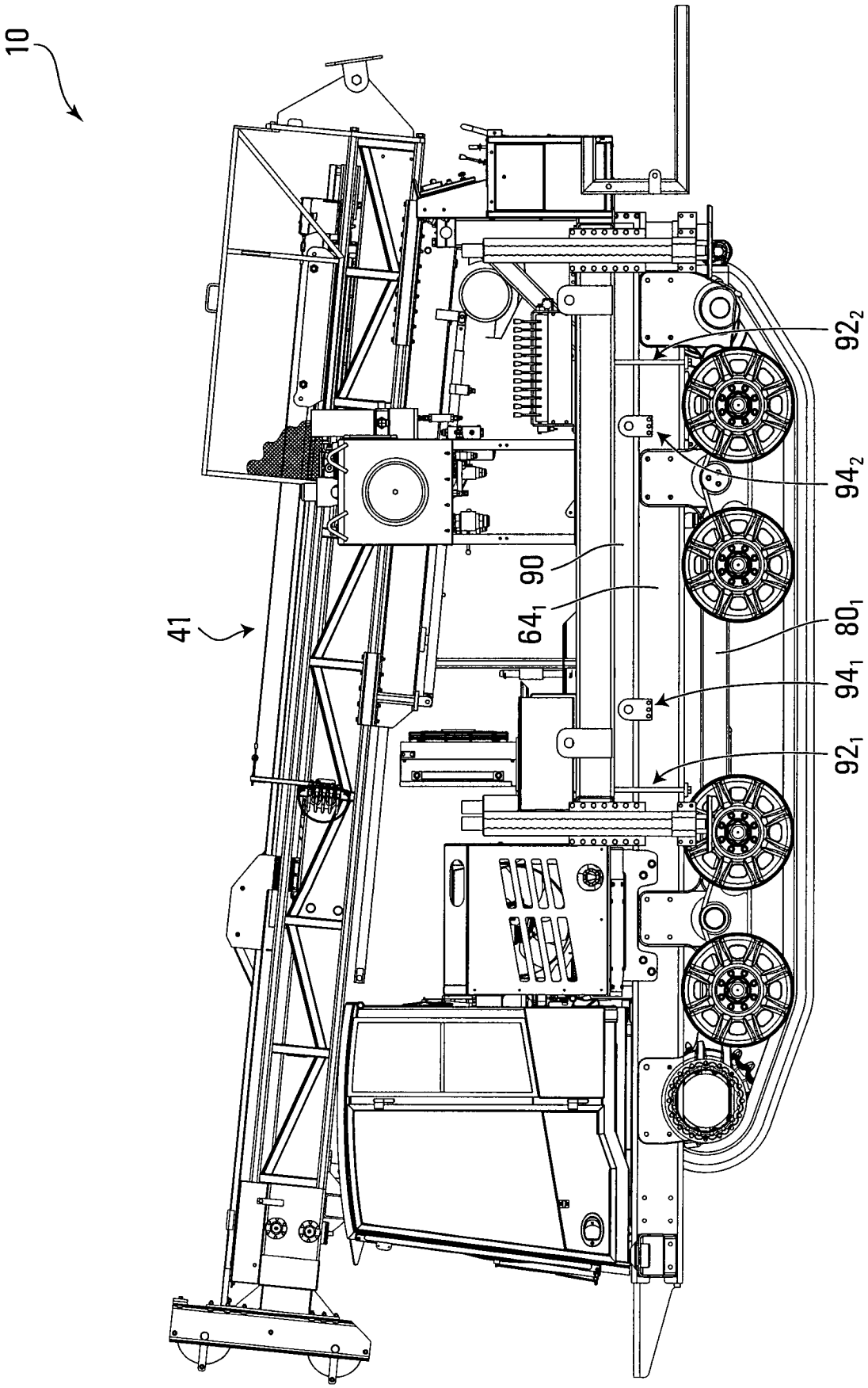

FIG. 26

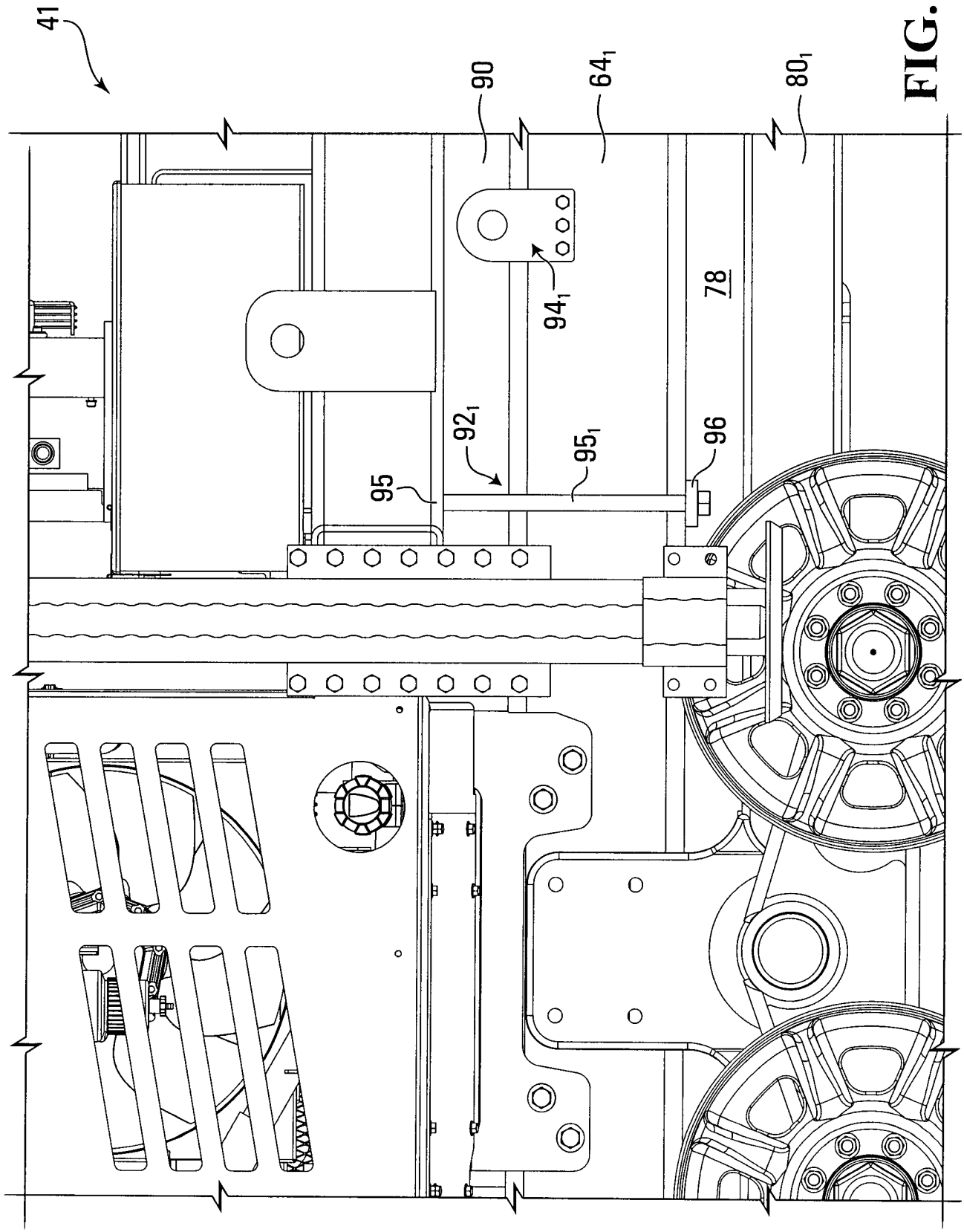

FIG. 27

FIG. 28

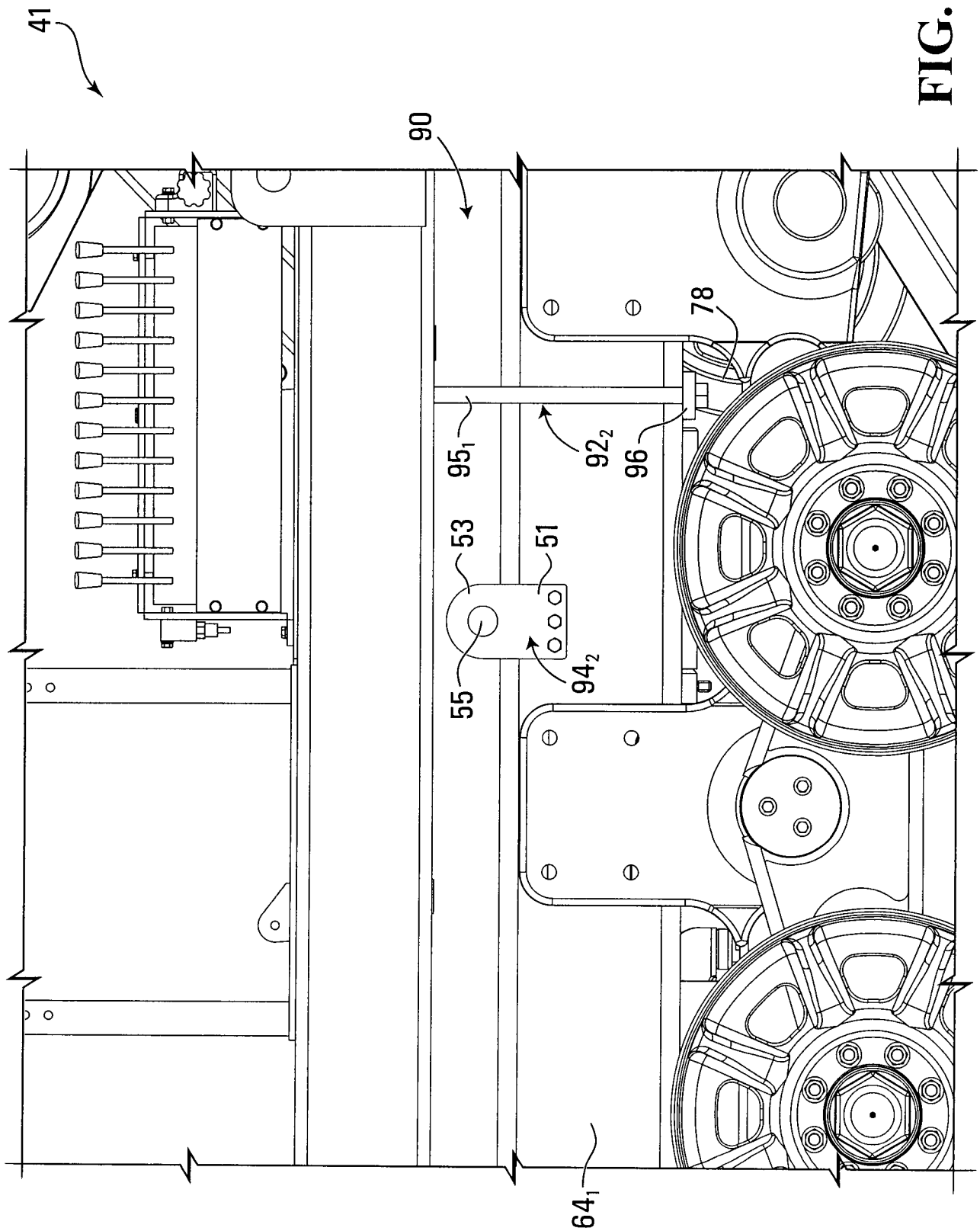

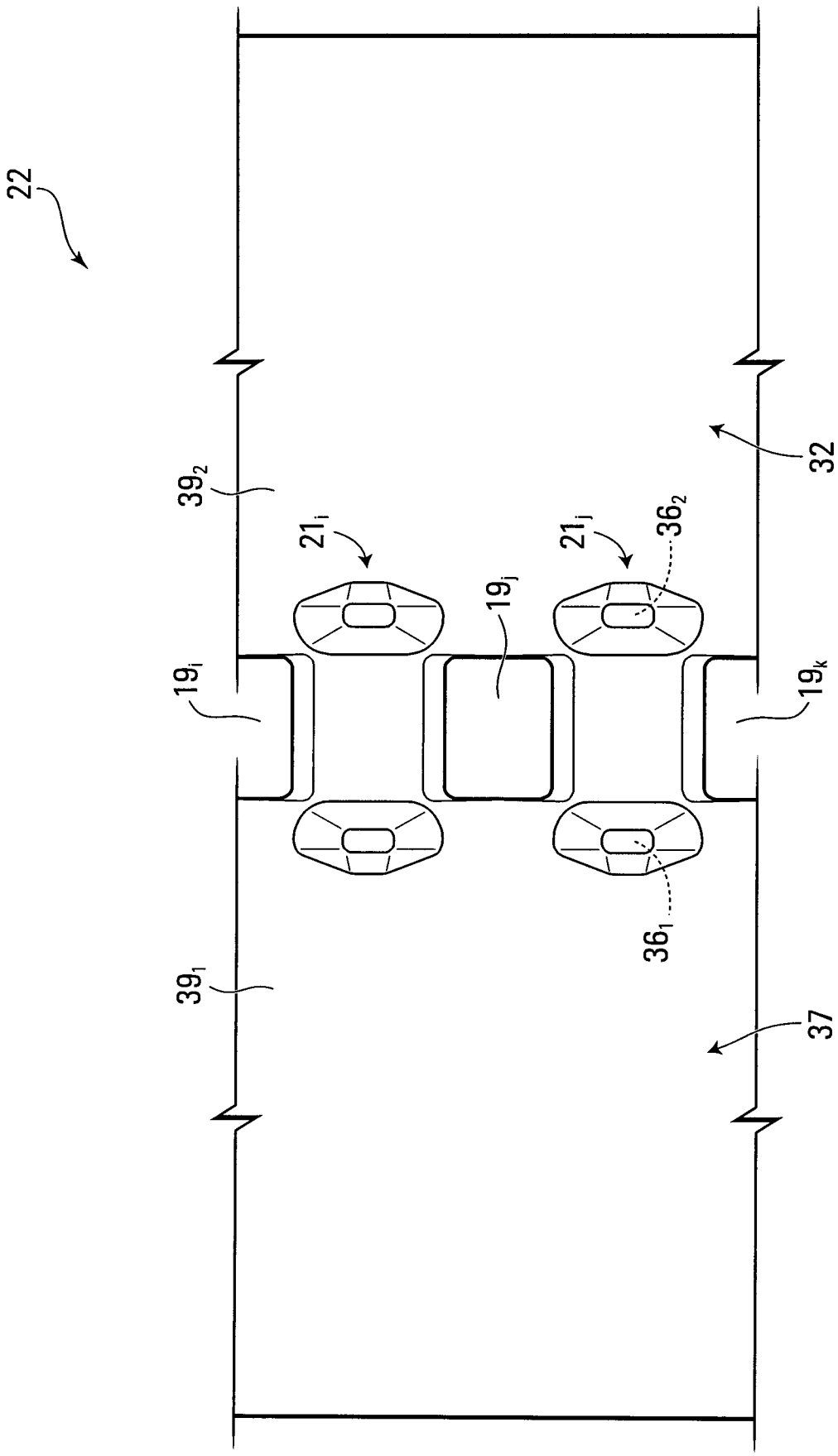

FIG. 29

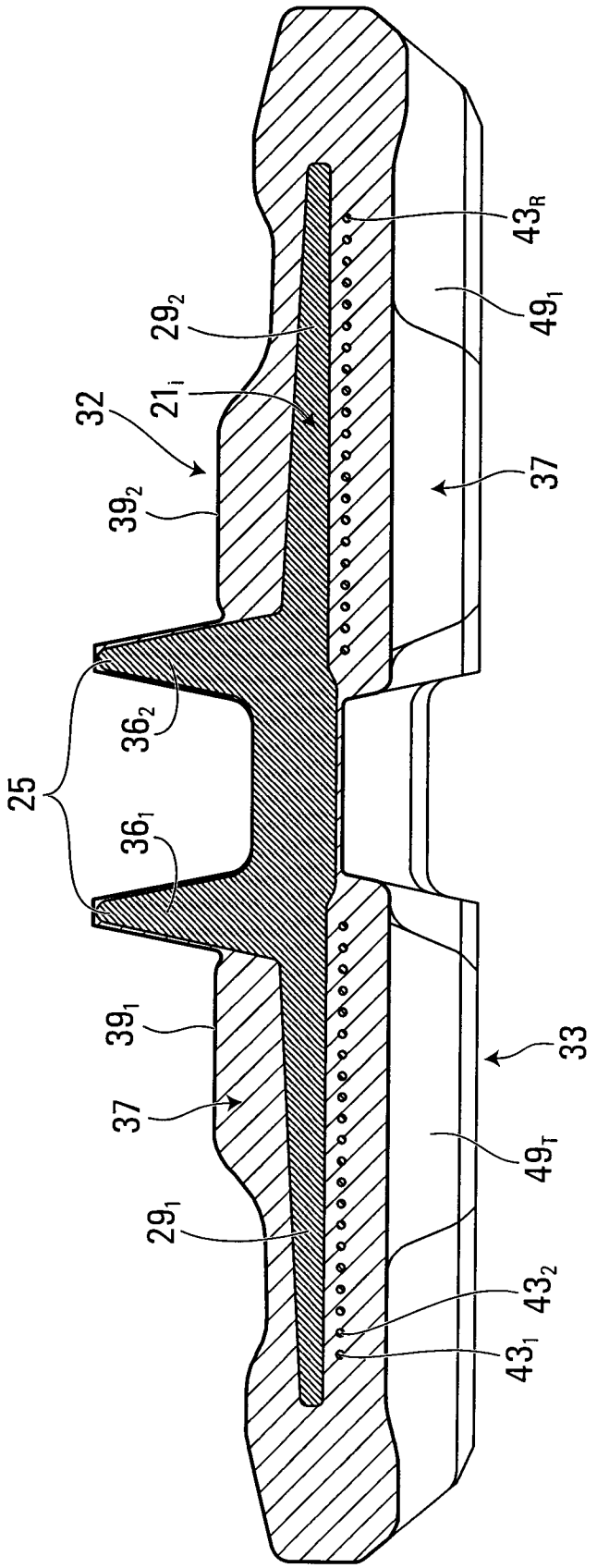

FIG. 30

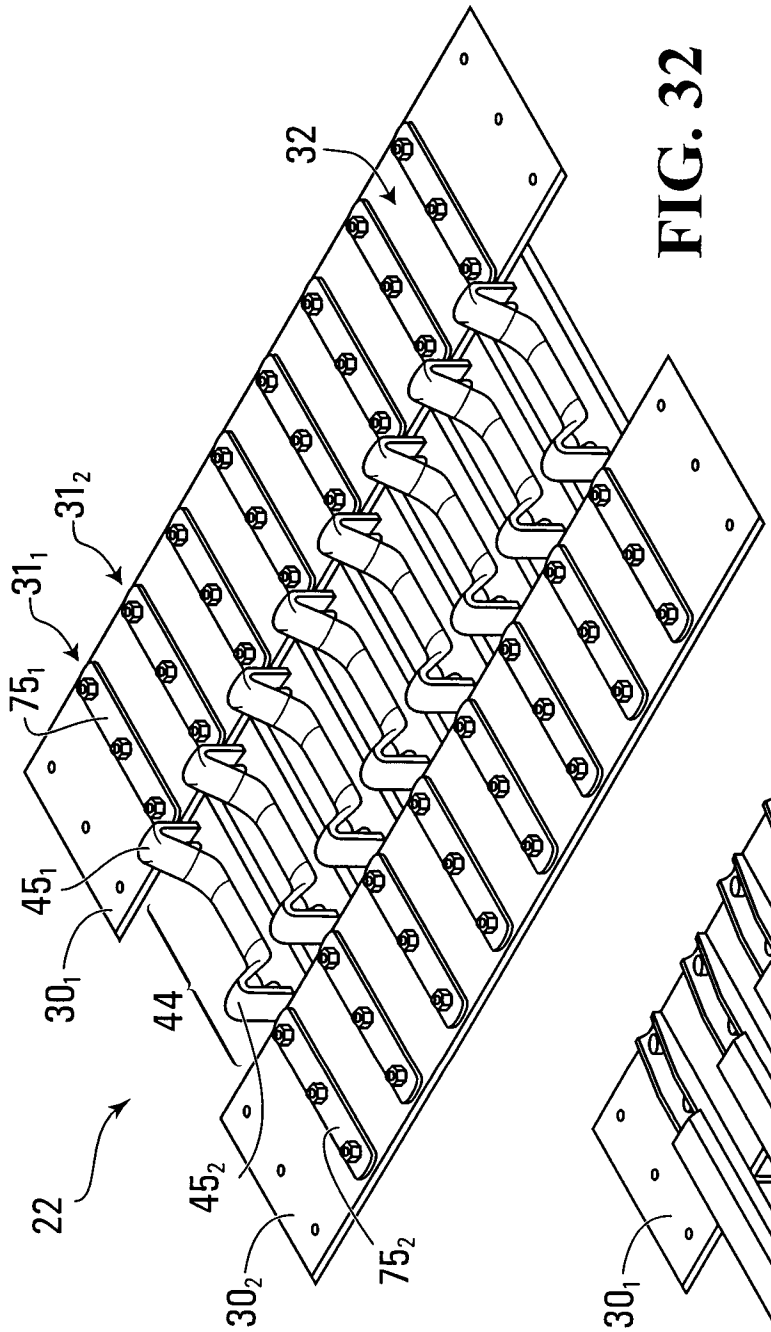
32
31_2
31_1
75_1
45_1
30_1
44
22
45_2
30_2
75_2

FIG. 32

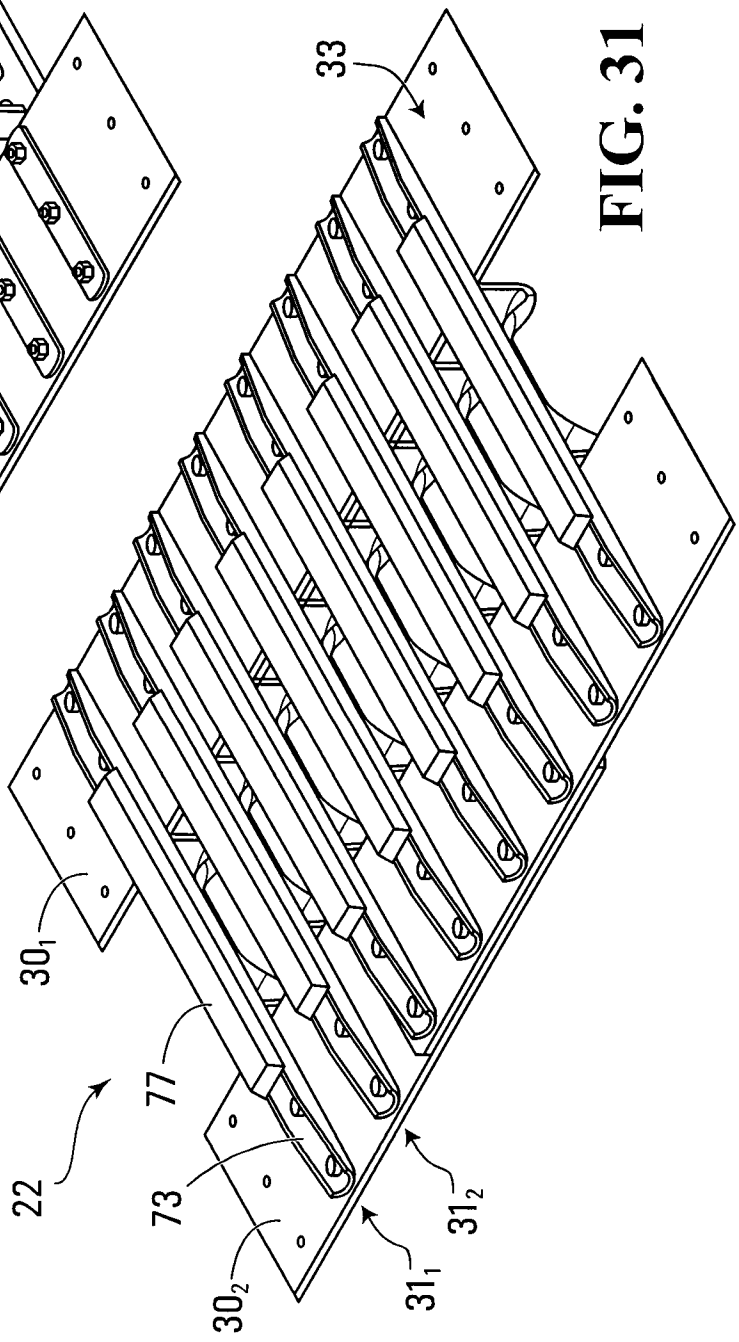
33
30_1
77
22
73
30_2
31_1
31_2

FIG. 31

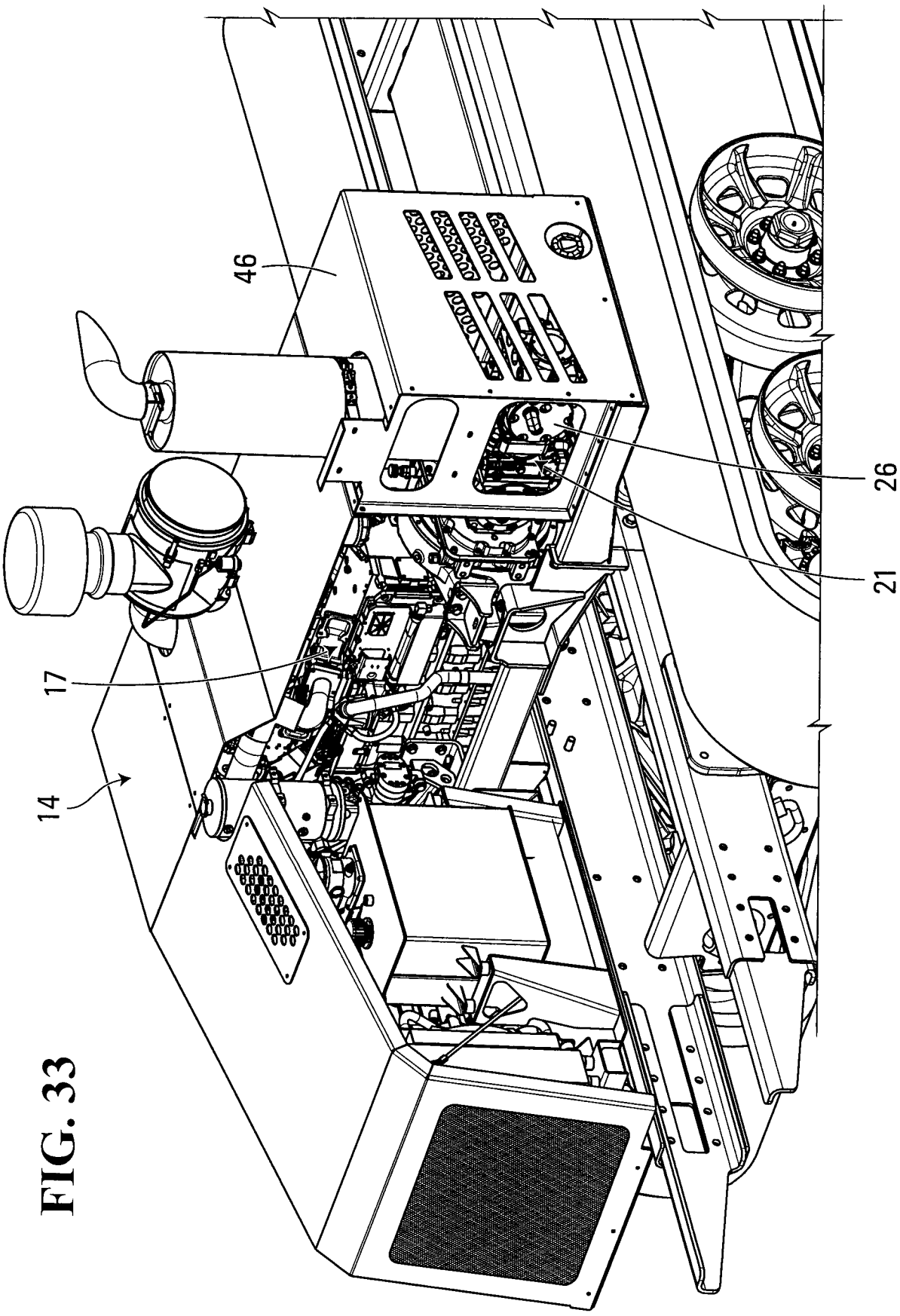

FIG. 33

FIG. 34

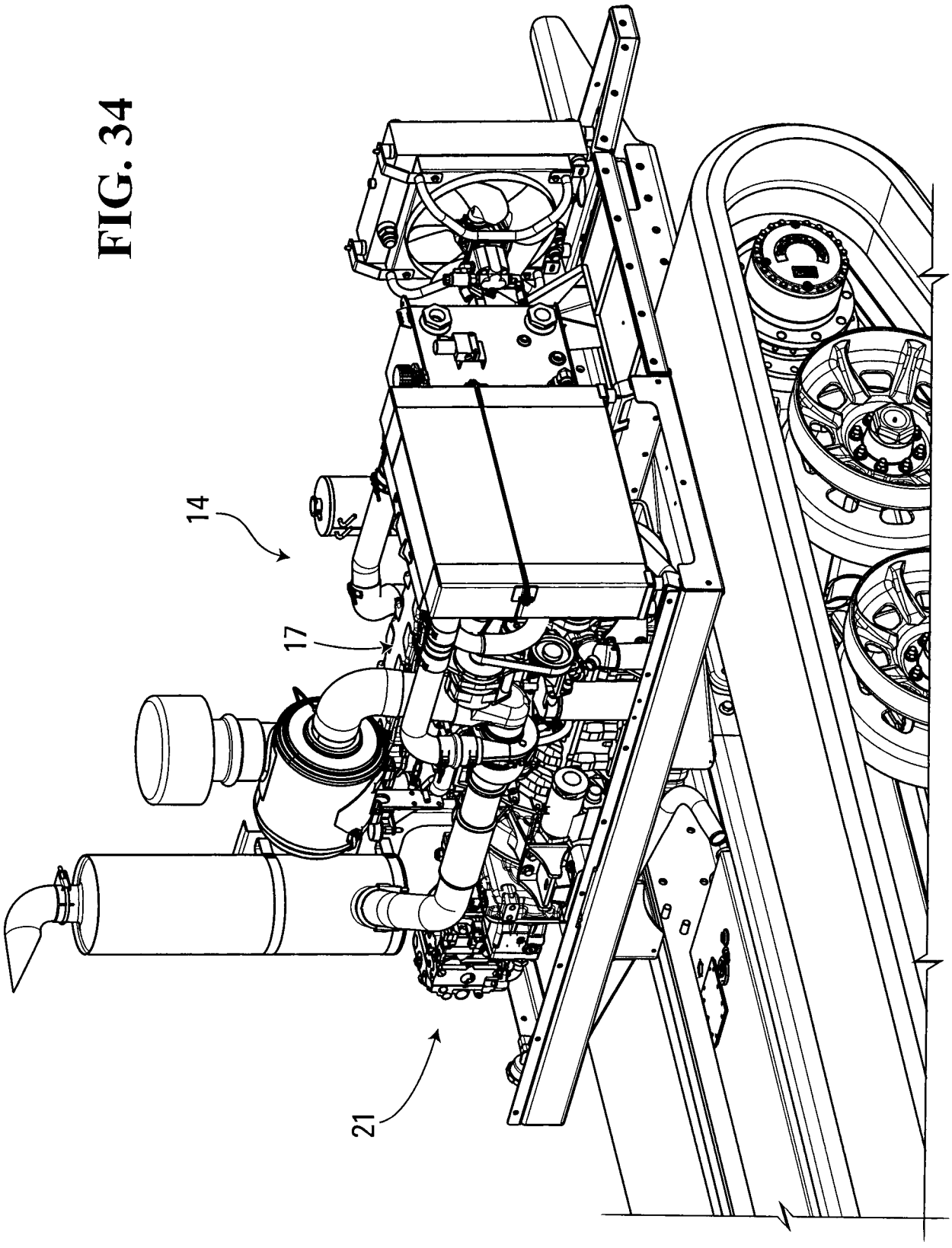

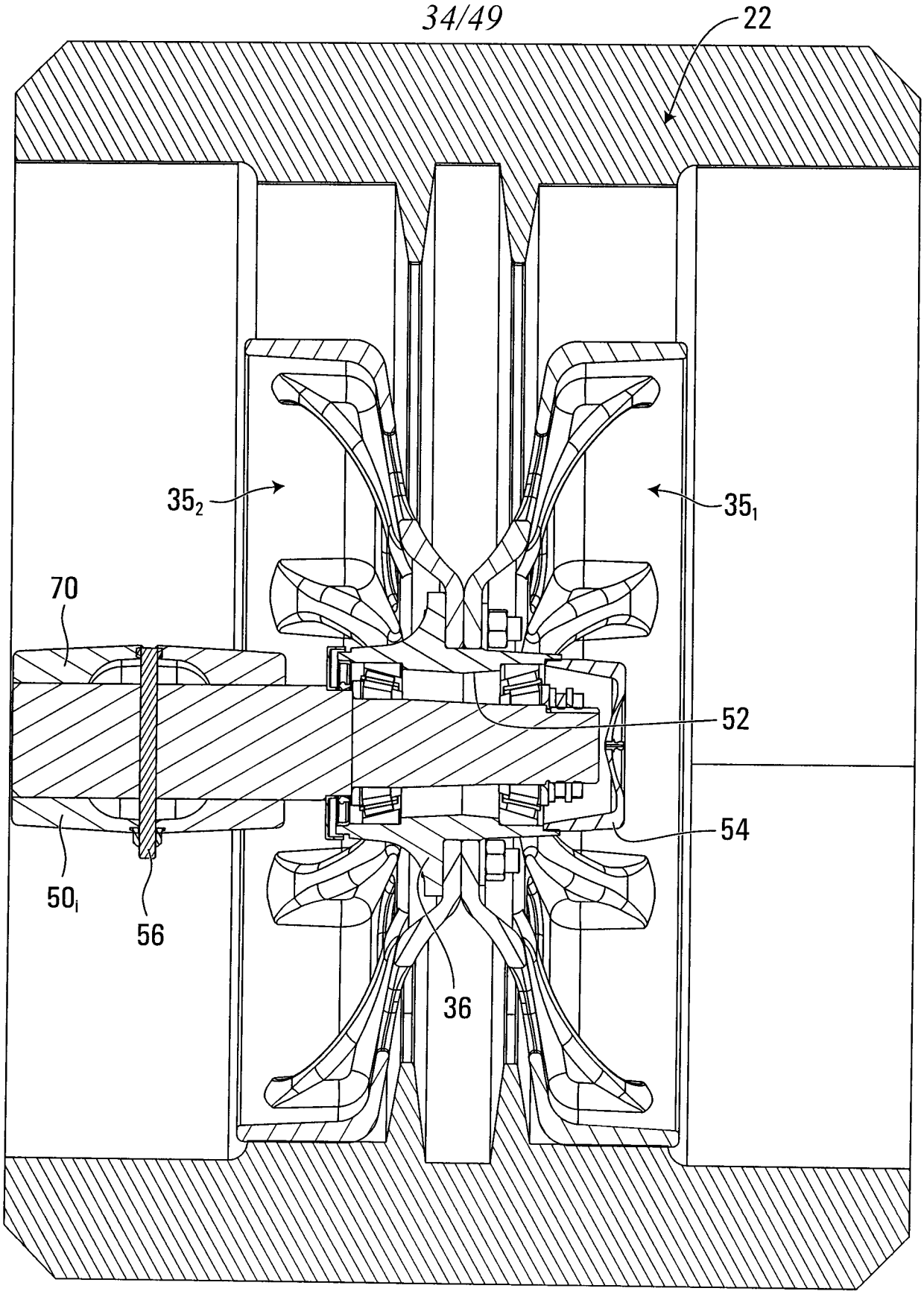

FIG. 35

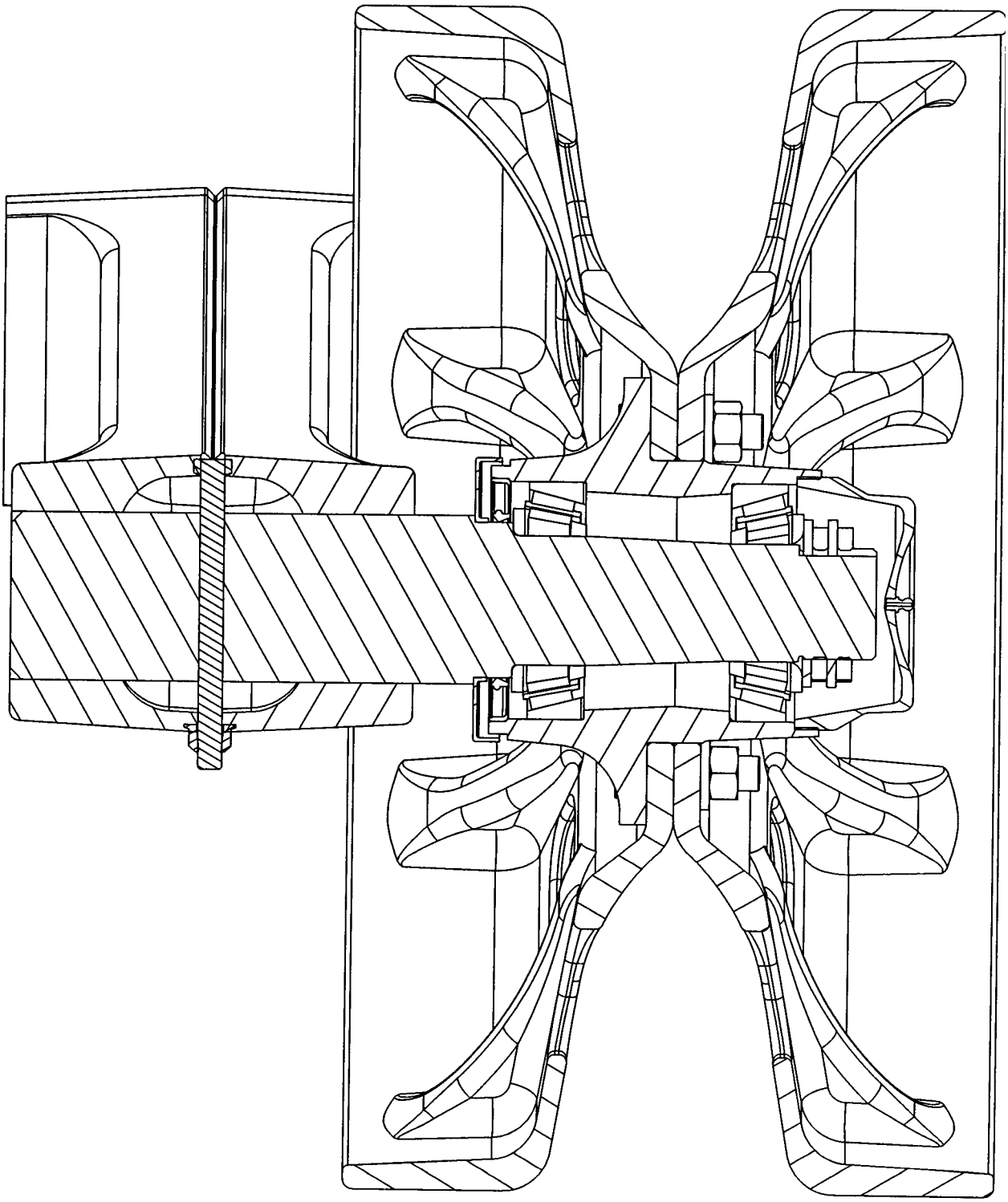

FIG. 36

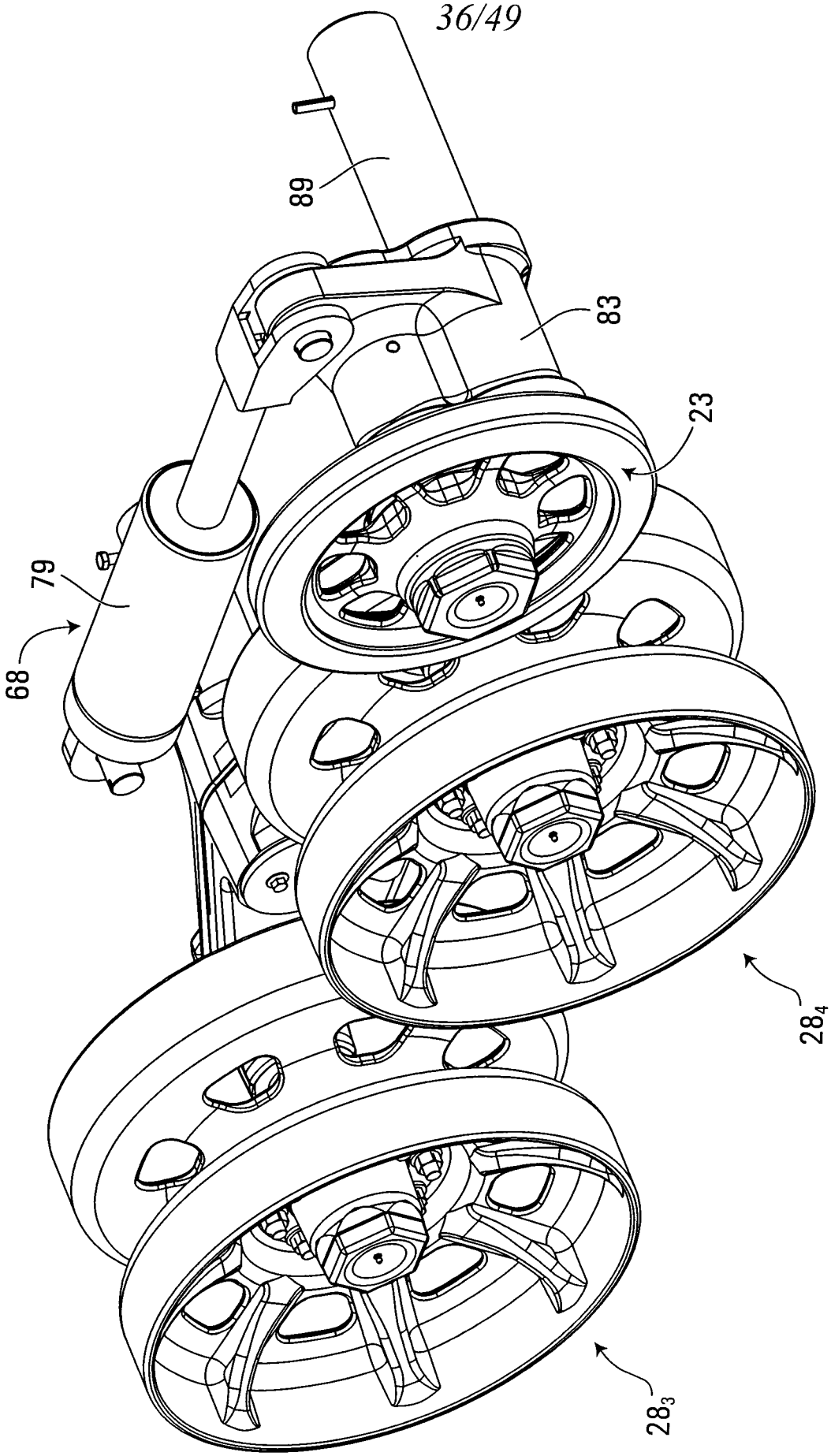

FIG. 37

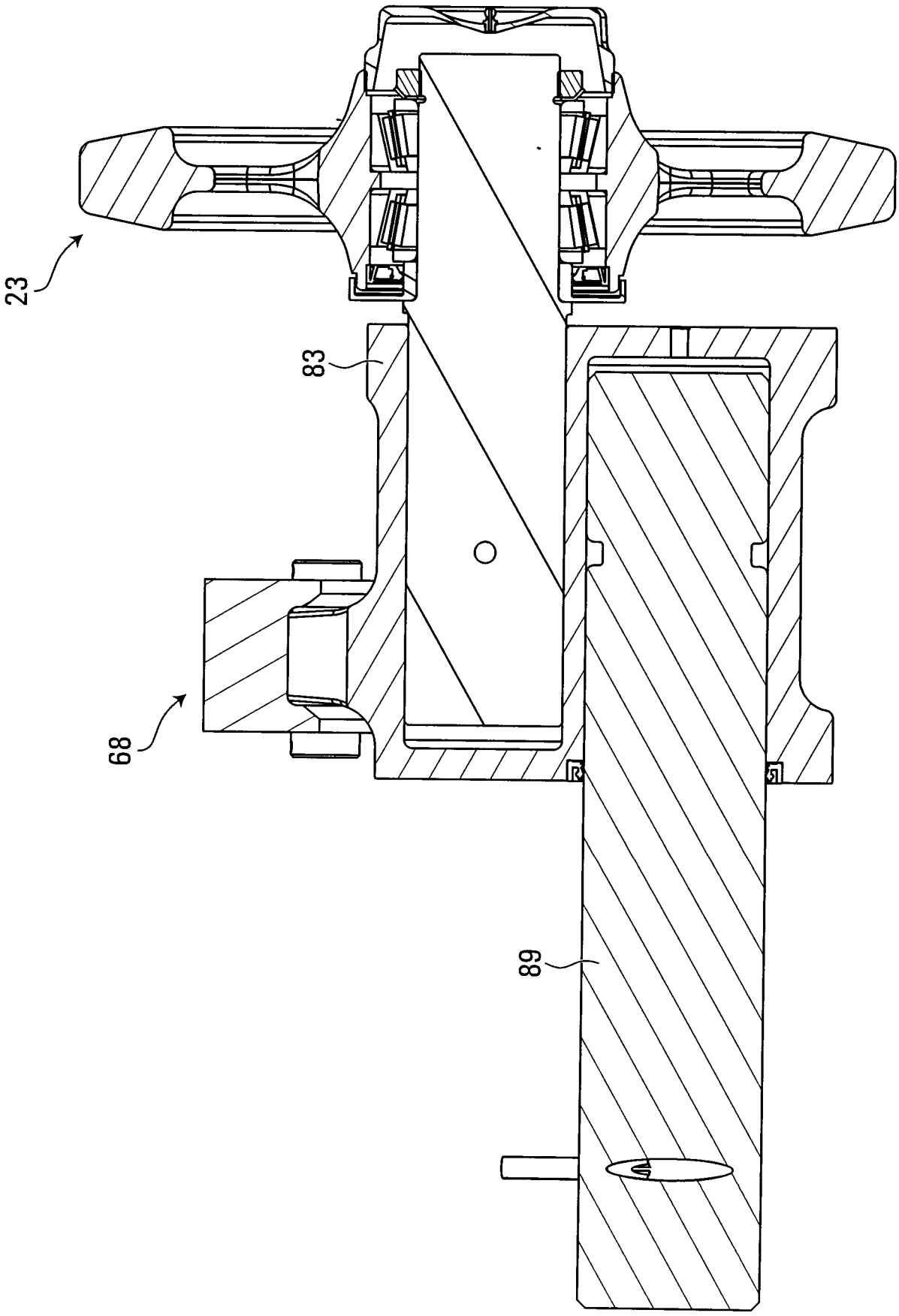

FIG. 38

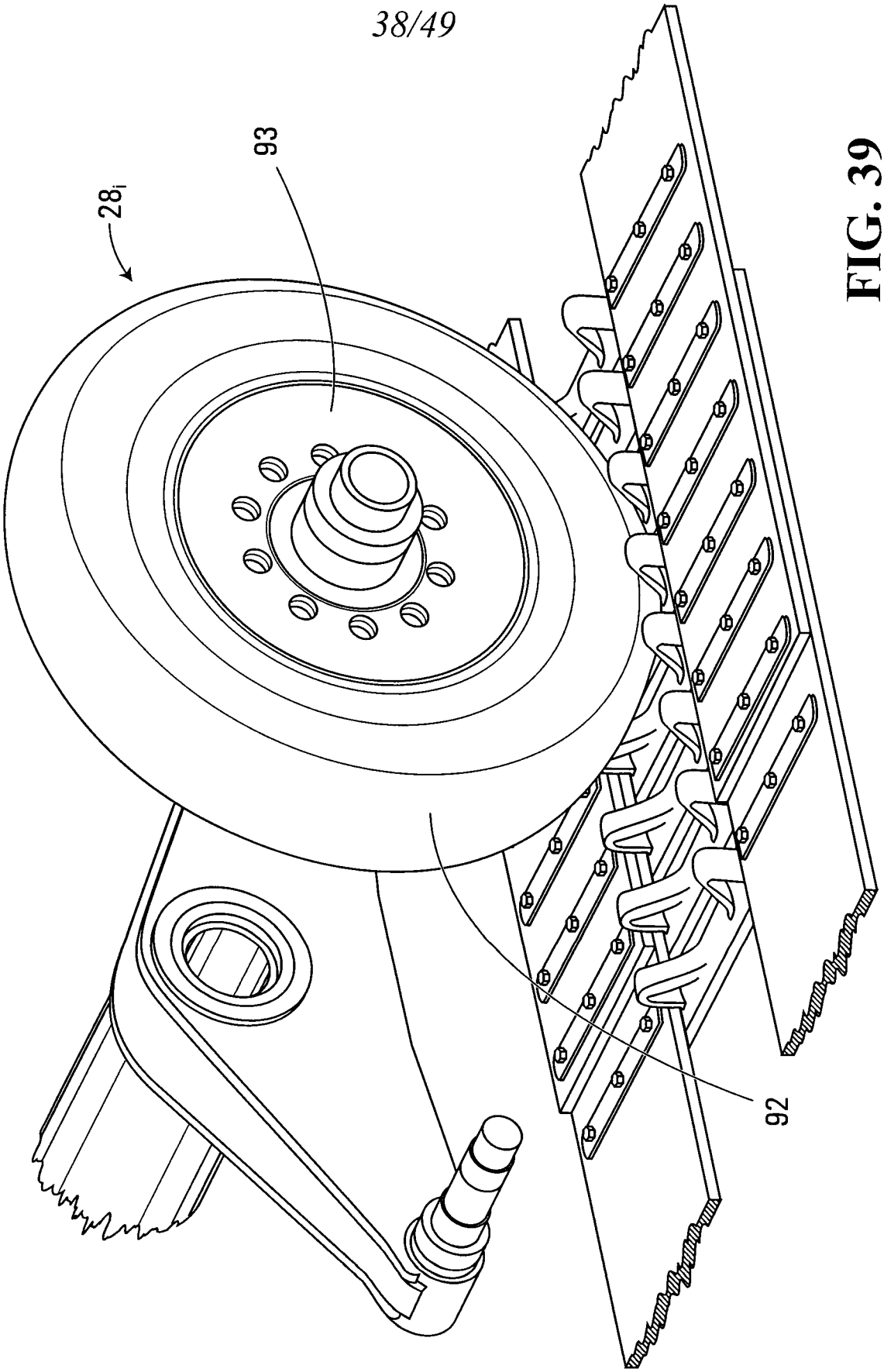

FIG. 39

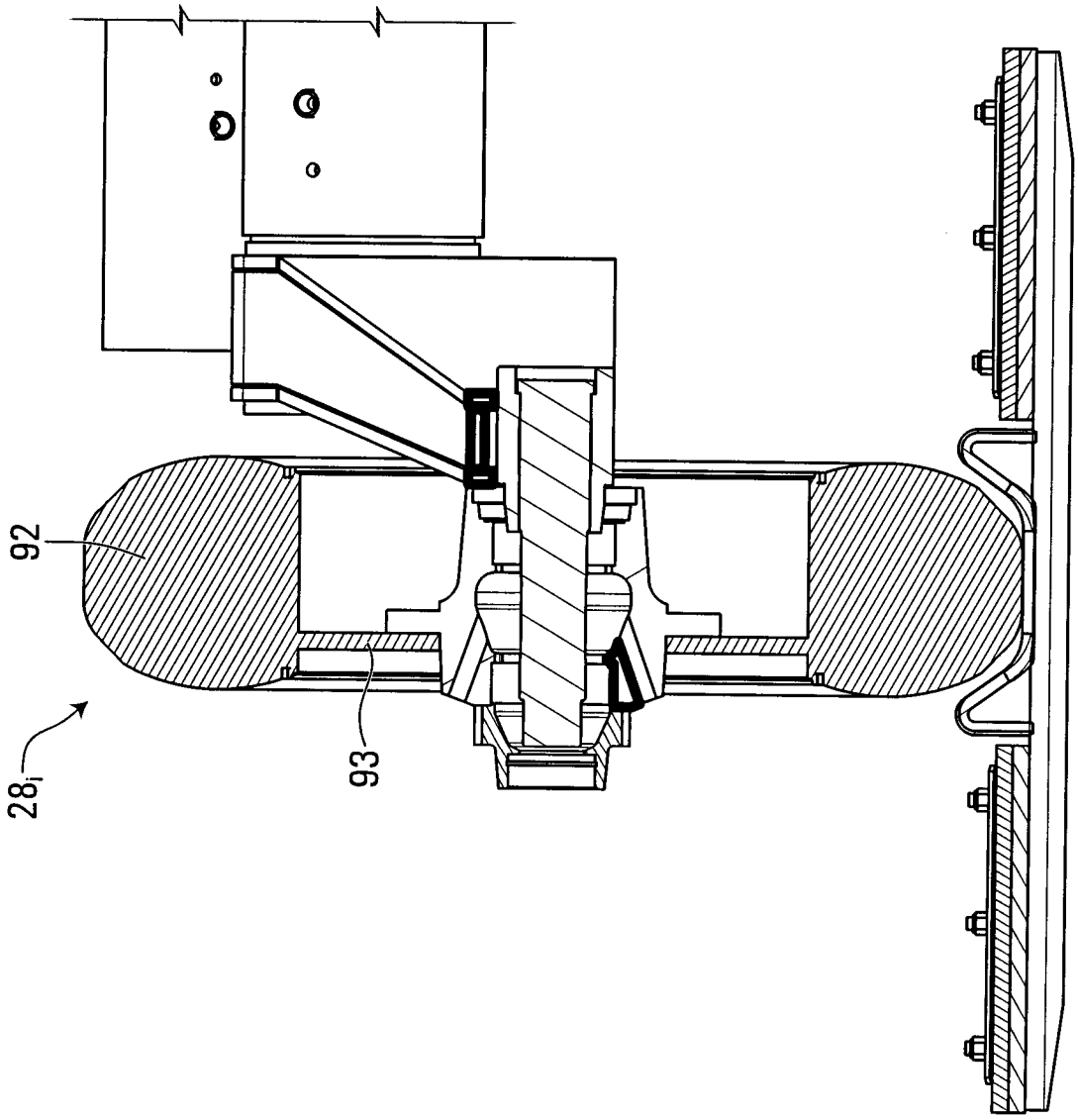

FIG. 40

FIG. 41

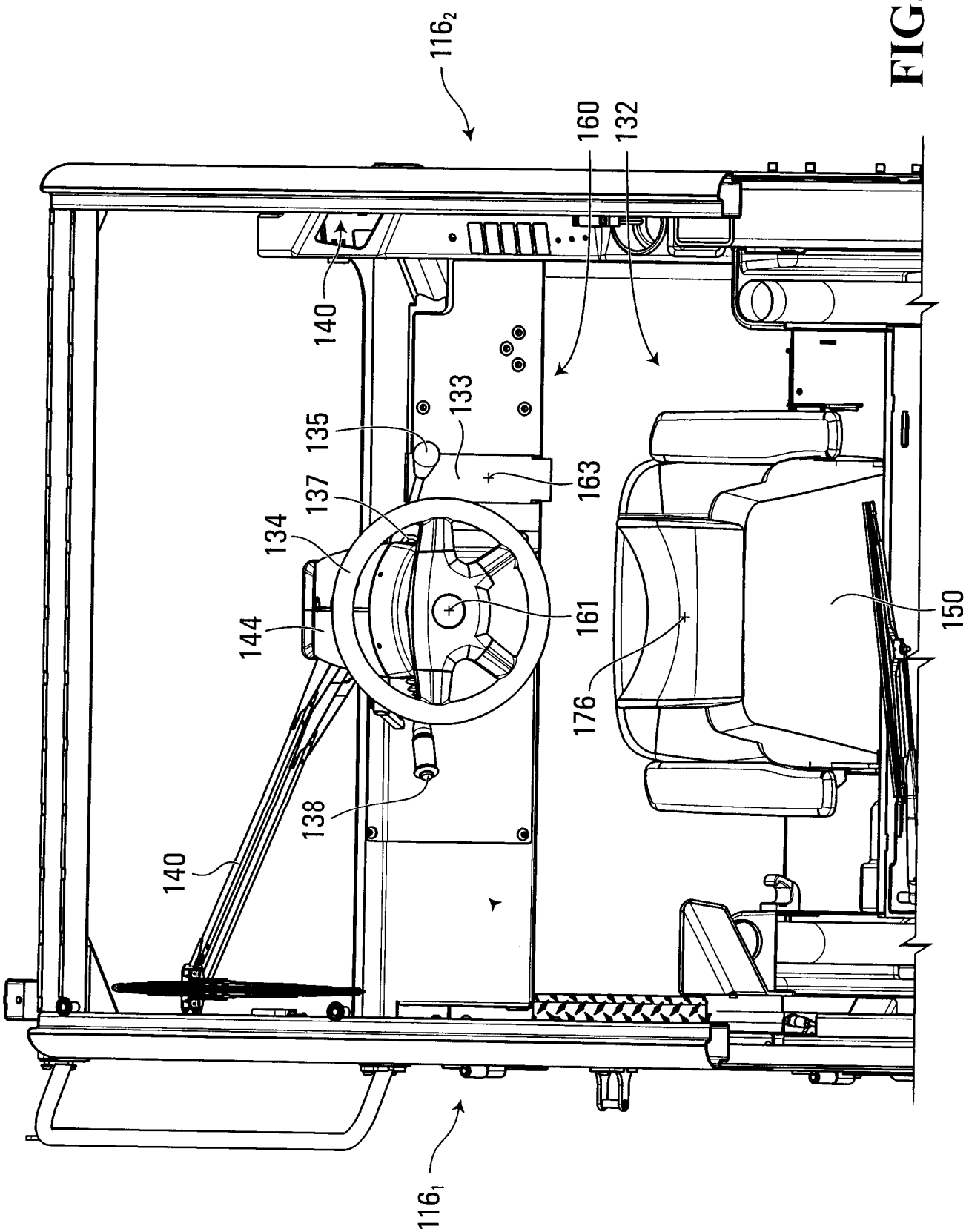
116₂
160
132
140
133
135
163
137
134
161
150
144
176
138
140
116₁

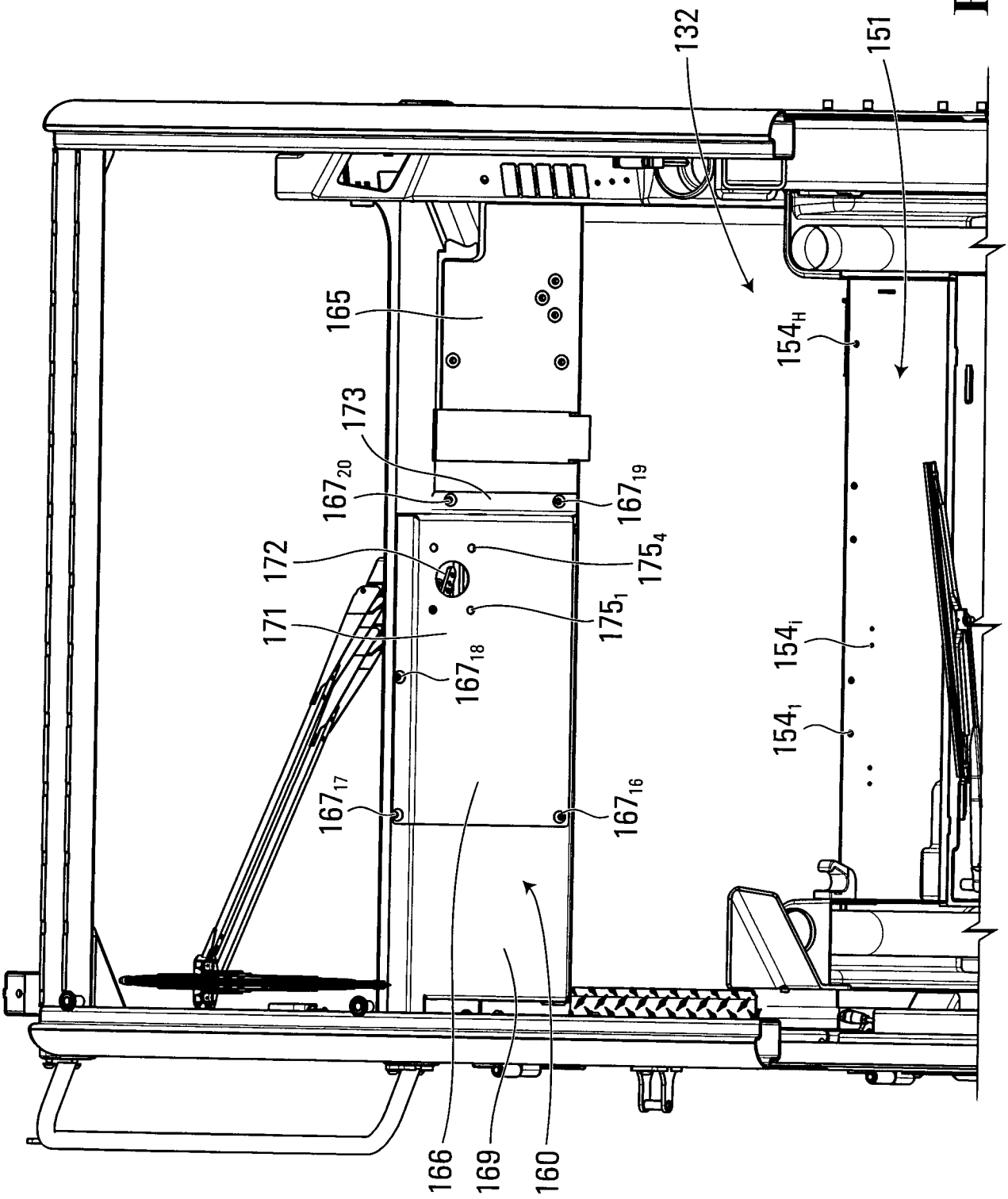
132
151
165
154H
173
167 20
167 19
172
175 4
171
175 1
154 i
167 18
154 1
167 17
167 16
166
169
160

FIG. 42

FIG. 43

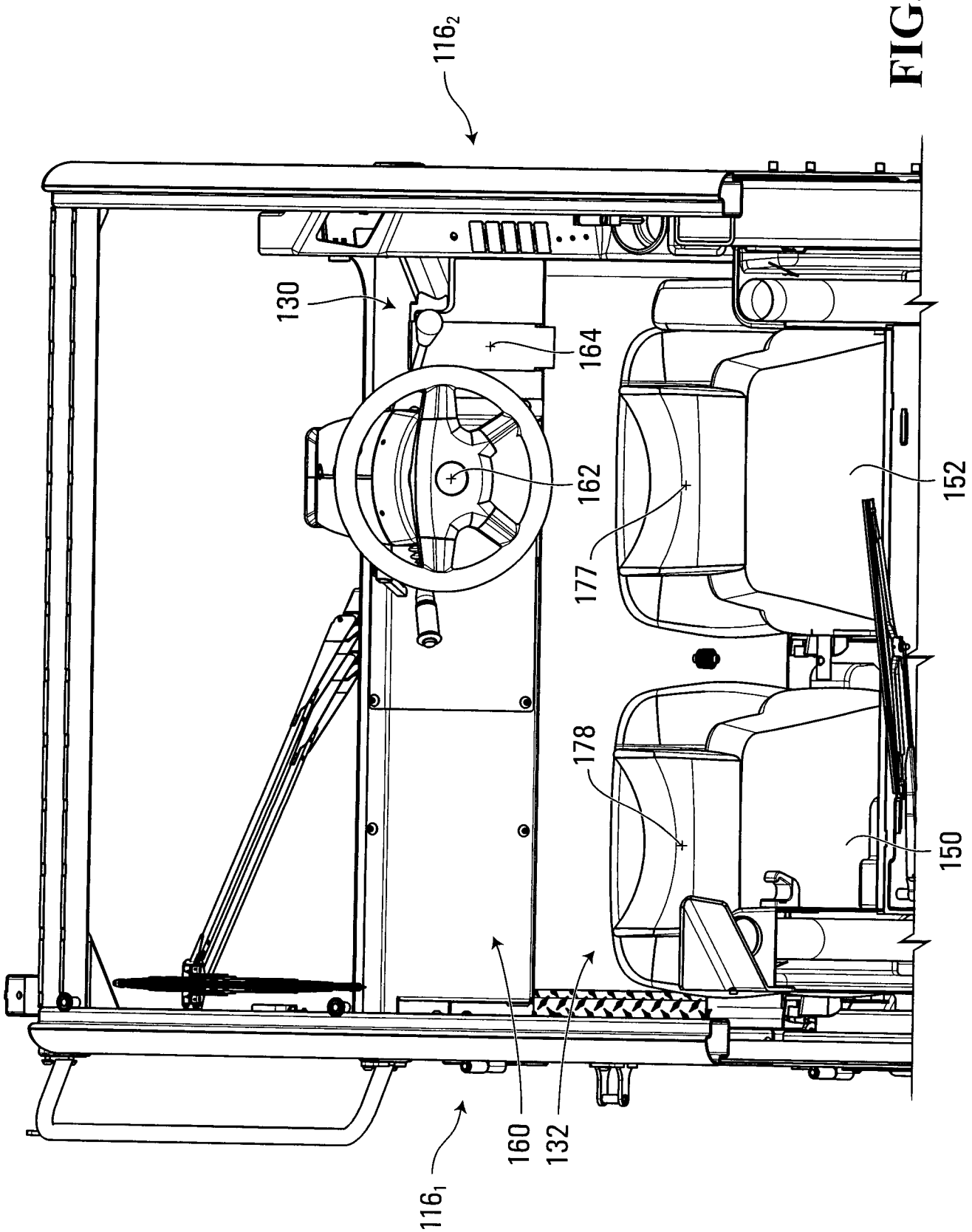

FIG. 44

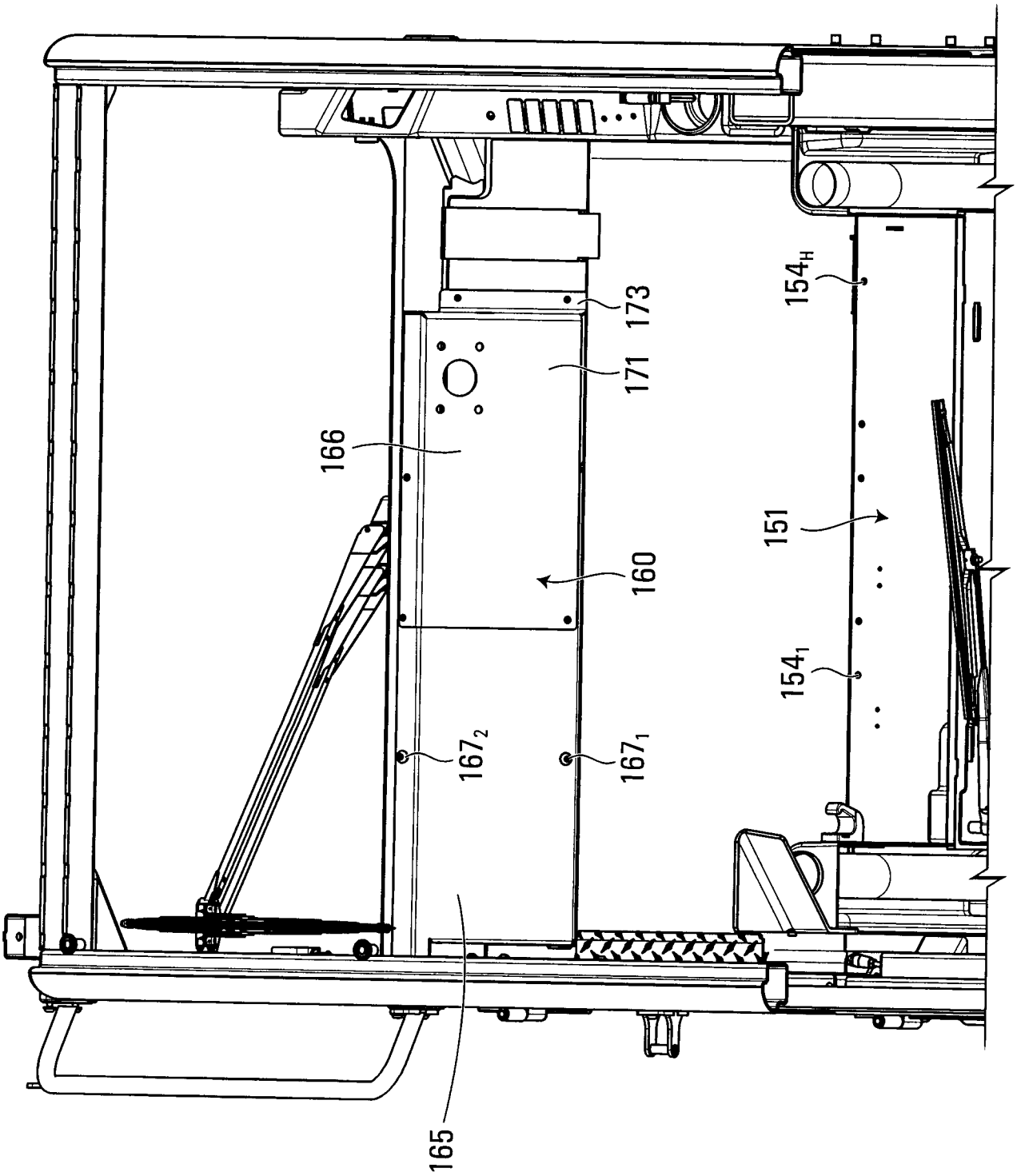

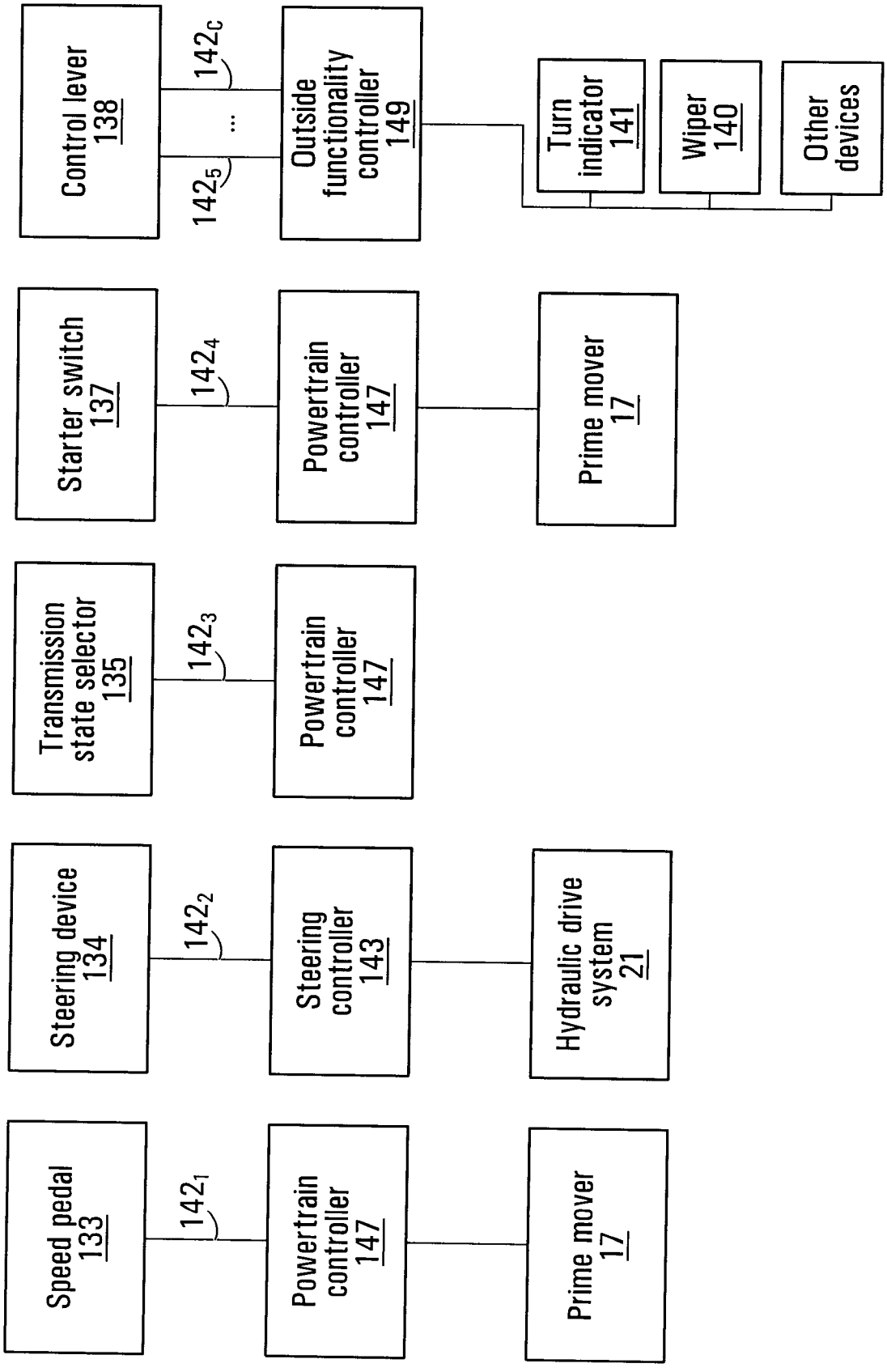
Speed pedal 133
142₁
Powertrain controller 147
Prime mover 17
Steering device 134
142₂
Steering controller 143
Hydraulic drive system 21
Transmission state selector 135
142₃
Powertrain controller 147
Starter switch 137
142₄
Powertrain controller 147
Prime mover 17
Control lever 138
142c
142₅
Outside functionality controller 149
Turn indicator 141
Wiper 140
Other devices

FIG. 45

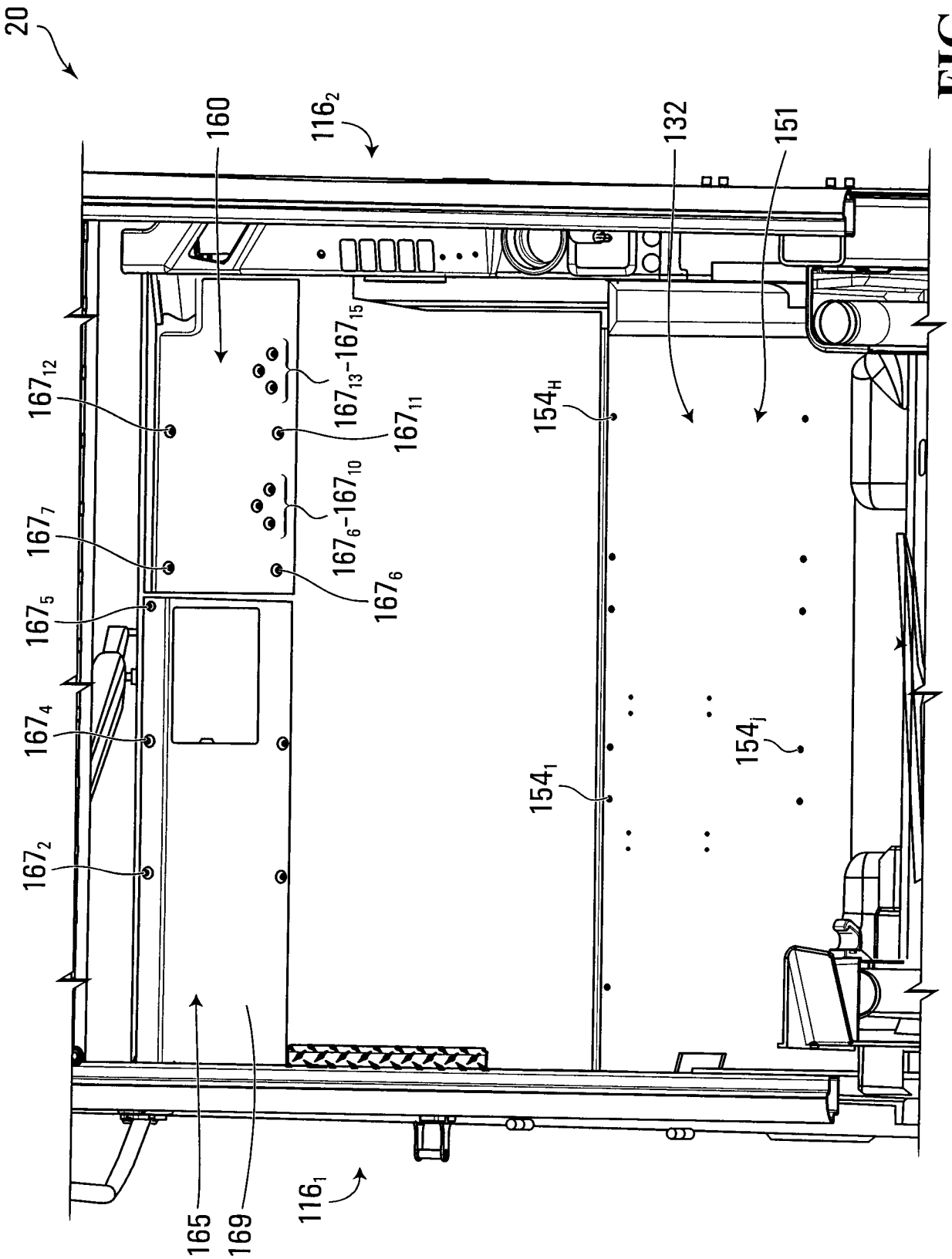
20
160
116_2
132
151
167_{12}
167_{13}-167_{15}
167_{11}
154_H
167_7
167_6-167_{10}
167_6
167_5
167_4
154_j
154_1
167_2
165
169
116_1

FIG. 46

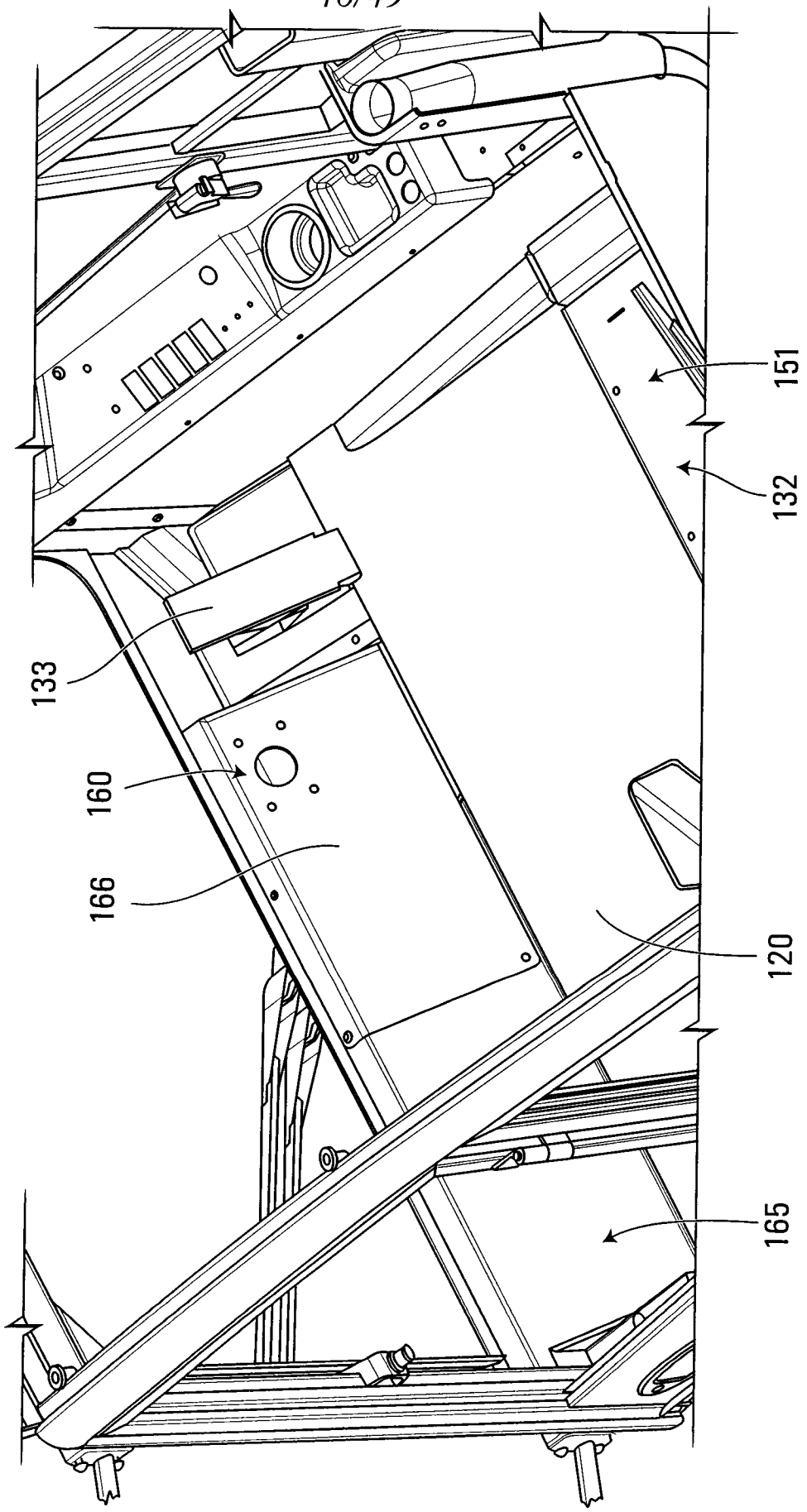

FIG. 47

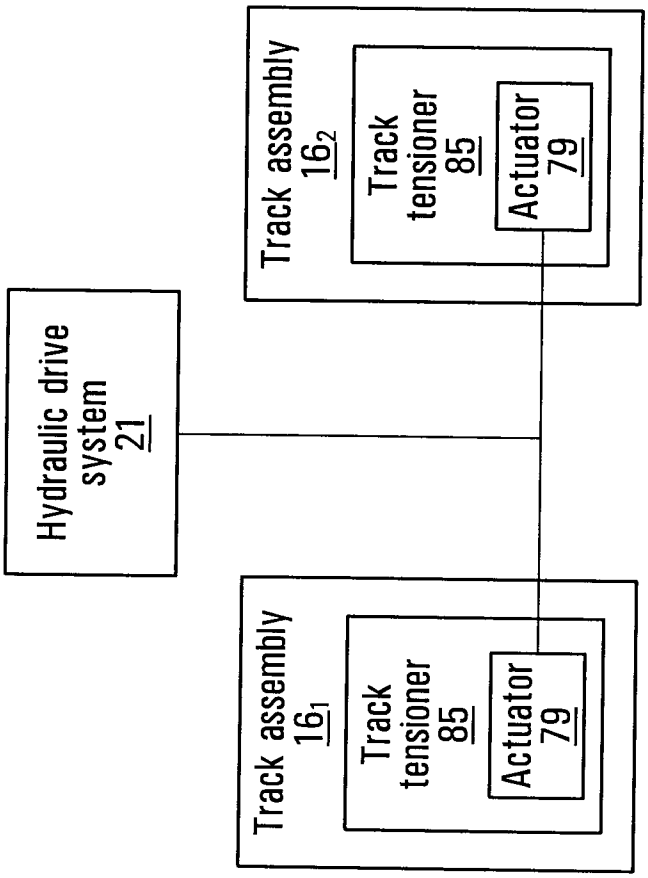
Hydraulic drive system 21
Track assembly 16₂
Track tensioner 85
Actuator 79
Track assembly 16₁
Track tensioner 85
Actuator 79

FIG. 48

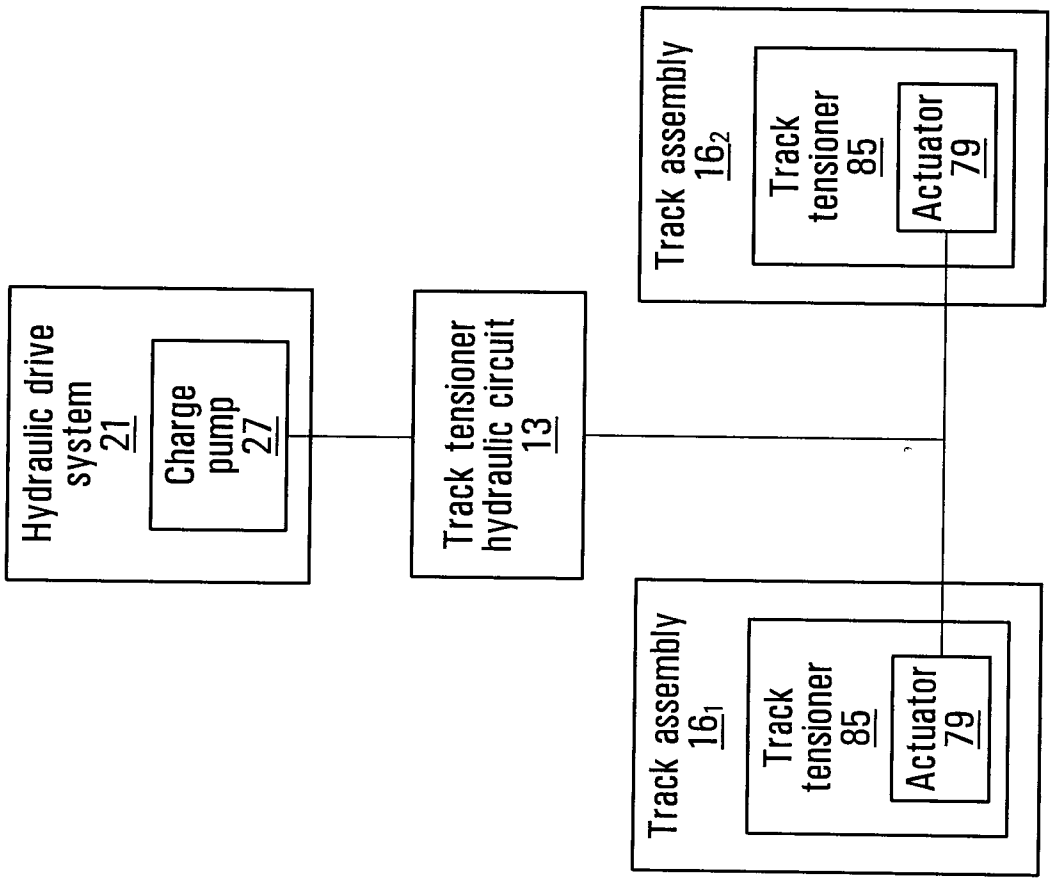
Hydraulic drive system 21
Charge pump 27
Track tensioner hydraulic circuit 13
Track assembly 16₂
Track tensioner 85
Actuator 79
Track assembly 16₁
Track tensioner 85
Actuator 79

FIG. 49

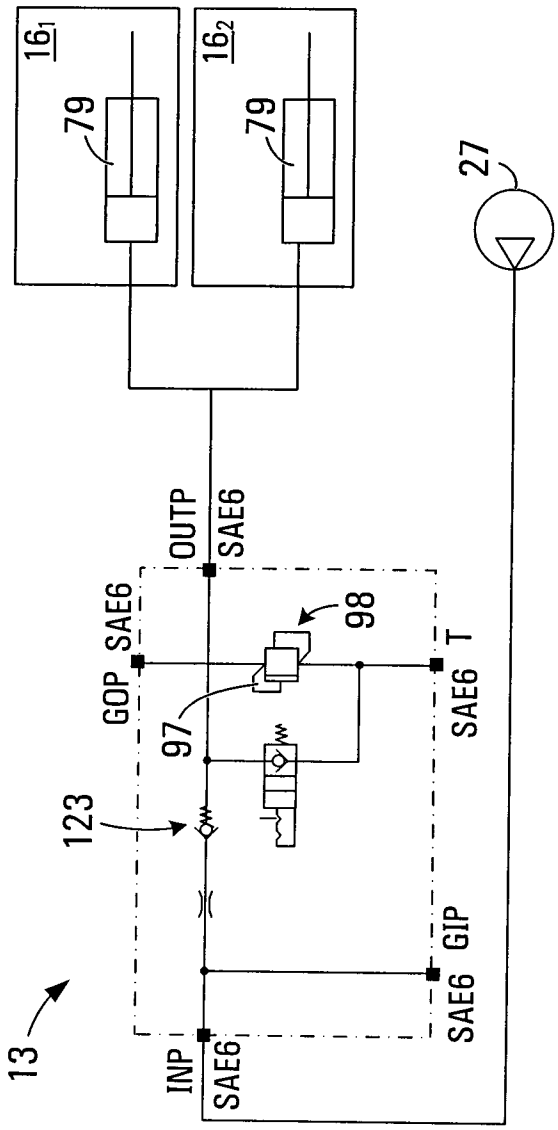
16₁
79
16₂
79
27
OUTP
SAE6
GOP
SAE6
98
T
SAE6
97
123
GIP
SAE6
INP
SAE6
13

FIG. 50

INTERNATIONAL SEARCH REPORT

International application No.
PCT/CA2012/000815

A. CLASSIFICATION OF SUBJECT MATTER
IPC: ***B62D 55/00*** (2006.01) , ***E02F 9/16*** (2006.01)
According to International Patent Classification (IPC) or to both national classification and IPC

B. FIELDS SEARCHED

Minimum documentation searched (classification system followed by classification symbols)
IPC(2006.01): B62D 55/00, E02F9/16, B62D33/06

Documentation searched other than minimum documentation to the extent that such documents are included in the fields searched

Electronic database(s) consulted during the international search (name of database(s) and, where practicable, search terms used)
Databases: Canadian Patent Database (CPD), EPOQUE (X-Full, Epodoc)
Keywords: endless, track, cabin, first, second, seat, position, steer, move, configure

C. DOCUMENTS CONSIDERED TO BE RELEVANT

Category*	Citation of document, with indication, where appropriate, of the relevant passages	Relevant to claim No.
X	WO2011067652A1 (WAGGER, K.) 09 June 2011 (09-06-2011) *Abs; Figs 1 and 3*	1 - 5, 21, 32 - 35, 37 - 45, 52, 53 and 55 - 57
Y		6, 7, 9 - 12, 48, 50 and 51
P, Y	NL2004954C (HUISSON, L. W. C.) 01 December 2011 (01-12-2011) *Figs 5 and 6*	6, 7, 9 - 12, 48, 50 and 51

[ ] Further documents are listed in the continuation of Box C.

[ ] See patent family annex.

* Special categories of cited documents :

"A" document defining the general state of the art which is not considered to be of particular relevance

"E" earlier application or patent but published on or after the international filing date

"L" document which may throw doubts on priority claim(s) or which is cited to establish the publication date of another citation or other special reason (as specified)

"O" document referring to an oral disclosure, use, exhibition or other means

"P" document published prior to the international filing date but later than the priority date claimed

"T" later document published after the international filing date or priority date and not in conflict with the application but cited to understand the principle or theory underlying the invention

"X" document of particular relevance; the claimed invention cannot be considered novel or cannot be considered to involve an inventive step when the document is taken alone

"Y" document of particular relevance; the claimed invention cannot be considered to involve an inventive step when the document is combined with one or more other such documents, such combination being obvious to a person skilled in the art

"&" document member of the same patent family

Date of the actual completion of the international search	Date of mailing of the international search report
19 December 2012 (19-12-2012)	20 December 2012 (20-12-2012)

Name and mailing address of the ISA/CA	Authorized officer
Canadian Intellectual Property Office Place du Portage I, C114 - 1st Floor, Box PCT 50 Victoria Street Gatineau, Quebec K1A 0C9 Facsimile No.: 001-819-953-2476	Adeeb Zarifa (819) 934-2692

INTERNATIONAL SEARCH REPORT
Information on patent family members

International application No.
PCT/CA2012/000815

Patent Document Cited in Search Report	Publication Date	Patent Family Member(s)	Publication Date
WO2011067652A1	09 June 2011 (09-06-2011)	CA2782167A1	09 June 2011 (09-06-2011)
		EP2507118A1	10 October 2012 (10-10-2012)
		ITMI20092133A1	03 June 2011 (03-06-2011)
		US2012305321A1	06 December 2012 (06-12-2012)
NL2004954C	01 December 2011 (01-12-2011)	NL2004954C	01 December 2011 (01-12-2011)
		WO2011152709A2	08 December 2011 (08-12-2011)
		WO2011152709A3	23 February 2012 (23-02-2012)