C. A. JUENGST.

SIGNATURE GATHERING OR OTHER MACHINE.

APPLICATION FILED AUG. 8, 1908.

1,068,778.

Patented July 29, 1913.

3 SHEETS—SHEET 1.

Fig. 1.

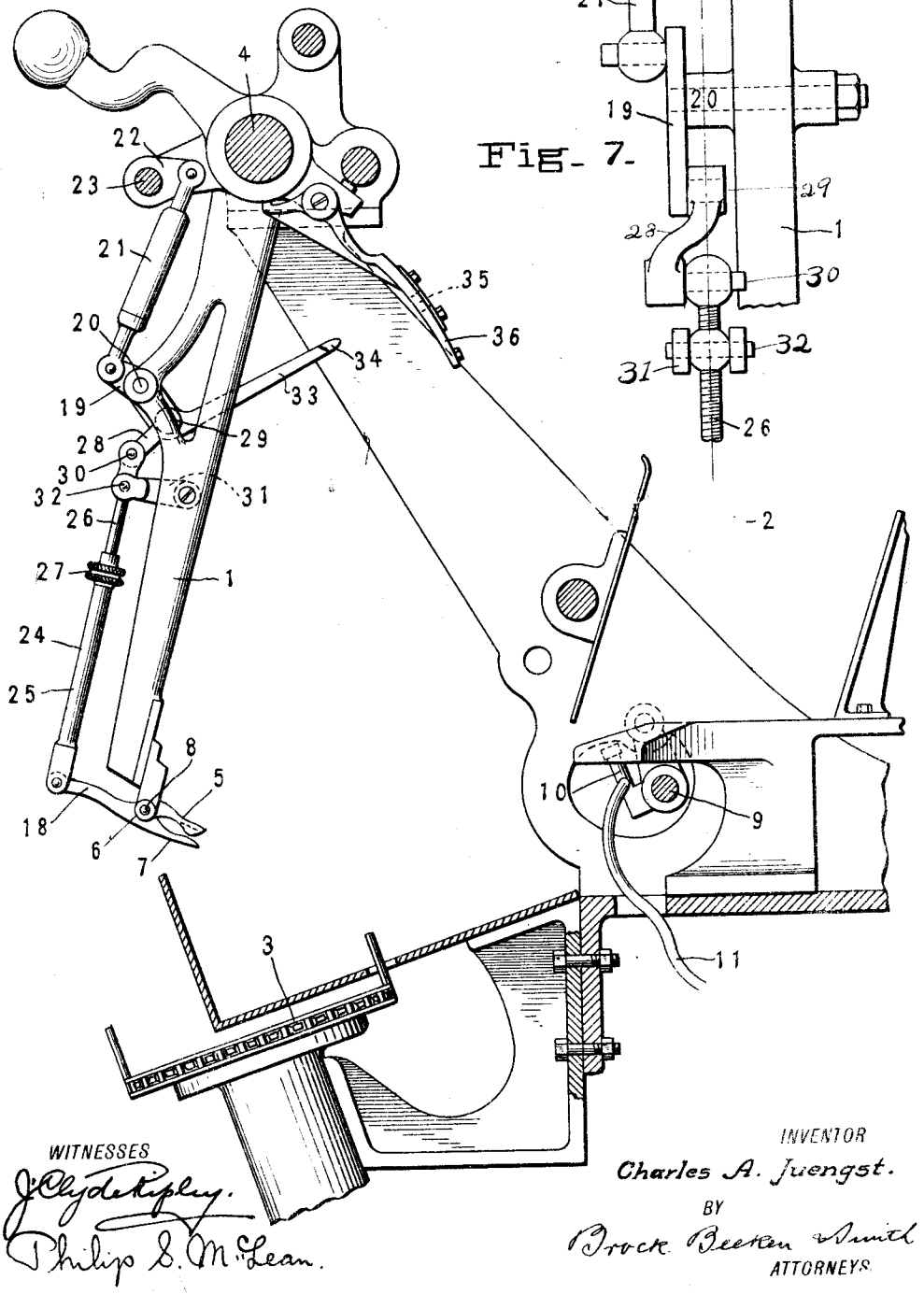

Fig. 7.

WITNESSES

J. Clyde Ripley.

Philip S. McLean.

INVENTOR

Charles A. Juengst.

BY

Brock Beeton & Smith

ATTORNEYS

C. A. JUENGST.

SIGNATURE GATHERING OR OTHER MACHINE.

APPLICATION FILED AUG. 8, 1908.

1,068,778.

Patented July 29, 1913

3 SHEETS—SHEET 2.

Fig. 2.

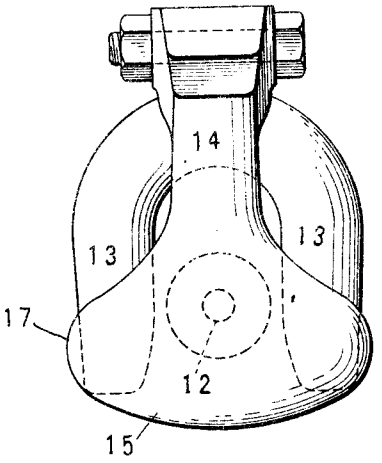

Fig. 3.

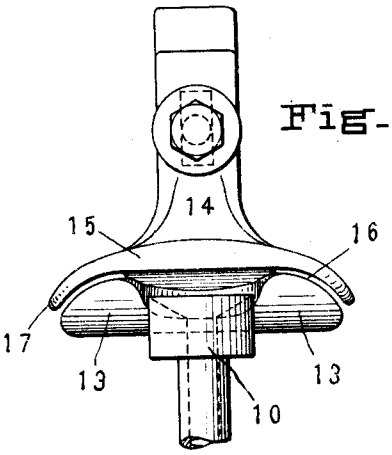

Fig. 5.

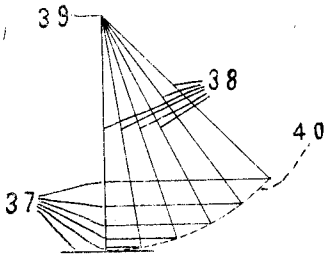

Fig. 4.

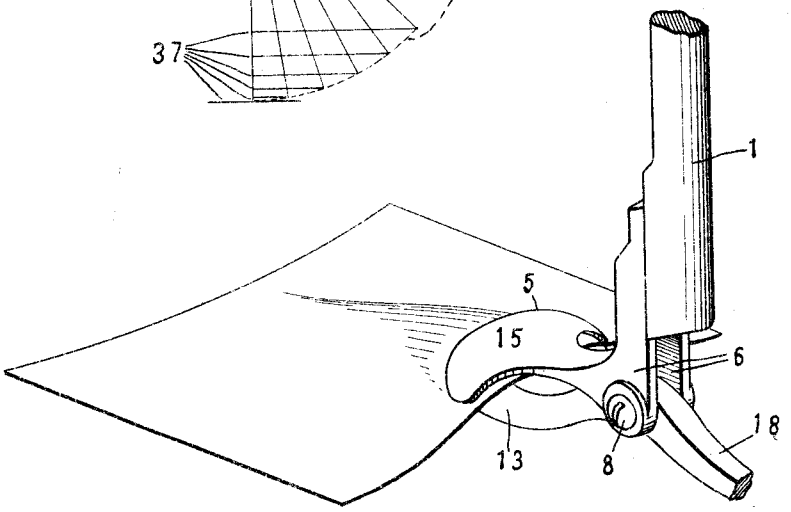

WITNESSES

J. Clyde Ripley.

Philip S. McLean.

INVENTOR

Charles A. Juengst.

BY

Brock Deeken & Smith

ATTORNEYS

C. A. JUENGST.

SIGNATURE GATHERING OR OTHER MACHINE.

APPLICATION FILED AUG. 8, 1903.

1,068,778.

Patented July 29, 1913.

3 SHEETS—SHEET 3.

Fig. 6.

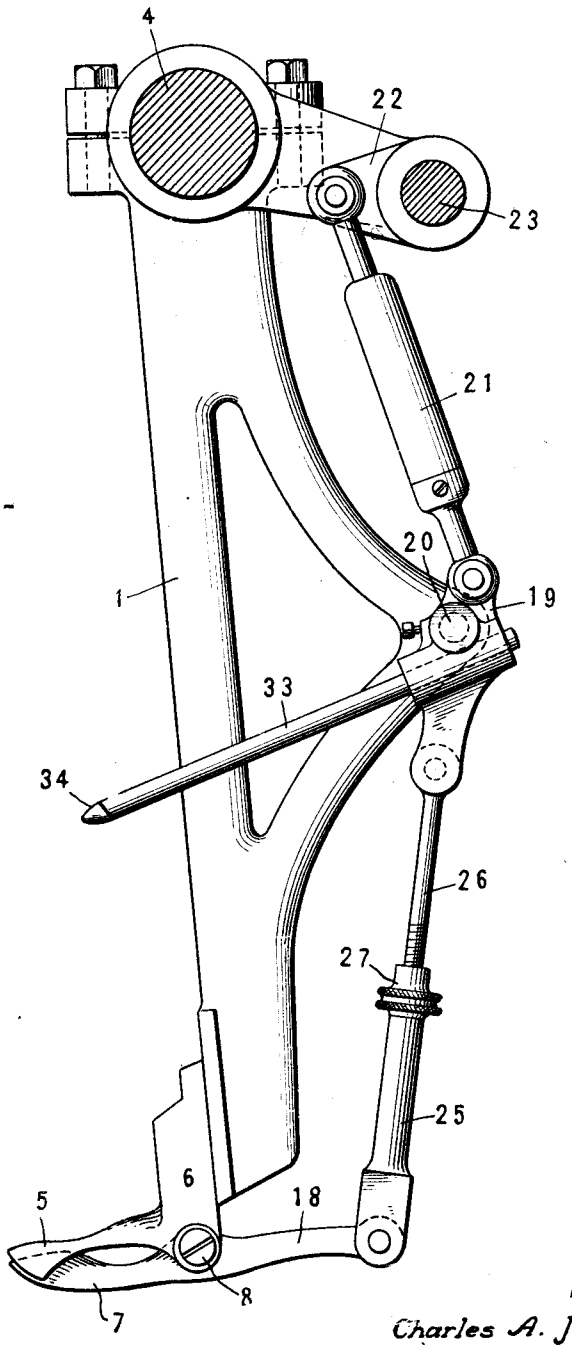

WITNESSES

J. Clyde Ripley.

Philip S. McLean.

INVENTOR

Charles A. Juengst.

BY

Brock Beeken & Smith

ATTORNEYS

UNITED STATES PATENT OFFICE.

CHARLES A. JUENGST, OF CROTON FALLS, NEW YORK.

SIGNATURE-GATHERING OR OTHER MACHINE.

1,068,778. Specification of Letters Patent. Patented July 29, 1913.

Application filed August 8, 1908. Serial No. 447,523.

To all whom it may concern:

Be it known that I, CHARLES A. JUENGST, a citizen of the United States, and resident of Croton Falls, in the county of Westchester and State of New York, have invented certain new and useful Improvements in Signature-Gathering or other Machines, of which the following is a specification.

My present invention relates to improvements in signature gathering or other machines, and has particular reference to the gripper or sheet handling mechanisms of such machines.

For the purpose of disclosure, the invention will be considered in connection with signature gathering machines, wherein the products handled are signatures or sheets, but I would have it understood that this is only one of the many uses of the invention, and that while particularly adapted to this use, it might be used equally as well with other than signature gathering machines, or it might be used independent of any machine at all.

One object of the invention is to provide gripper mechanism for signature gathering or other machines which will seize the sheets or other articles and wholly support the same without allowing them to bend or collapse.

Another object of the invention is the provision of a detector mechanism operating in conjunction with the gripper mechanism, which will be extremely sensitive and will detect the slightest change or variation in the thickness of the sheets or signatures.

Other objects will appear hereinafter as the specification proceeds.

With grippers generally, and more particularly those of signature gathering machines, it is necessary to employ a separating device for separating the signatures, sheets, or other articles to be seized by the grippers. Heretofore this separation has usually been accomplished by means of twin suckers which engage the signature or sheet at two points, to allow the gripper to enter between these two points and seize the sheet. By thus seizing the sheet between two points the sheet is extremely liable to bend or crumple up when lifted by the gripper. Then too, if one of the two suckers should fail to act, as for instance, by not coming in proper contact with the sheet, the suction power of the other twin sucker would be materially lessened, so that in this way, the inefficiency of one sucker would react upon the other and destroy the efficiency of both. These disadvantages I overcome by using only a single sucker, that is, one having only a single sucker mouth, and in constructing the gripper jaws so as to straddle the sucker and to seize the sheet on both sides of the sucker. There is an additional advantage here, in that the sheet is seized by the gripper at two points, instead of one, as was formerly the case, and by reason of this fact, the sheet is much less liable to bend or collapse. Under the old method, where the gripper jaws reached in between the twin suckers, the width of the jaws had of course to be limited so as to pass in between the suckers. The gripper jaws were therefore of necessity, comparatively narrow, and as the sheet was supported only by these comparatively narrow gripper surfaces, the sheet was very liable to bend in the middle and droop, instead of remaining stiff and straight as it should. Now with my present invention, as the jaws pass around the suckers, the width of the jaws is not restricted and may be made as broad as is necessary to properly support the sheet. I have found that by crimping one edge of a sheet and thus shortening the edge so crimped, the balance of the sheet is stiffened and the sheet may then be handled without its bending or drooping. For this reason I prefer to shape the gripper jaws so as to crimp the edge of the sheet seized, so that by thus crimping the sheet and by having the jaws of extra width, the sheet is entirely supported by the jaws and held in stiffened condition so that it may be properly handled.

Another feature of the invention consists in providing toggle connections for opening and closing the gripper jaws, which will cause the jaws to close at a gradually reducing rate of speed, in combination with a detector device which moves at a constant rate of speed and has a greater range of movement than the jaws. By this arrangement, the slightest variation in the thickness of the sheet or signature (when such articles are being handled), will cause a proportionately greater or exaggerated variation in the relative position of the detector, so that the jaws of the gripper are very sensitive to any variation in the thickness of the sheet. This gradual reduction in the closing movement of the jaws is accom-

plished preferably by means of toggle levers connected to the jaws and so arranged that the toggle levers will be in the more nearly straightened position when the jaws are closed, as the movement of the levers is comparatively slight and is much slower when approaching this position. As the movement of the jaws is dependent upon the movement of the toggle levers, the gradual reduction in the speed of the toggle levers when approaching the straightened position, causes a correspondingly decreasing rate of speed in the closing of the jaws. The jaws are rendered still more sensitive by providing the movable jaw with a leverage extension for operating the same, which is of greater length than the jaw itself.

In the accompanying drawings is illustrated the preferred embodiment of the invention, but various changes may be made in the construction and arrangement of the parts, such as come within the intended scope of the claims hereto annexed.

In the said drawings: Figure 1, is a side elevation of my invention with as much of a signature gathering machine as is necessary to illustrate the application of the invention to such a machine. Fig. 2, is a top plan view of the gripper jaws, showing in dotted lines the relative position of the sucker with respect to the jaws. Fig. 3, is a front edge view of the jaws in their closed position, showing the manner in which the lower jaw straddles the sucker. Fig. 4, is a detail view in perspective showing the manner in which the jaws crimp a sheet to give it the proper stiffness to prevent it from collapsing. Fig. 5, is a diagrammatical view illustrating the respective movements of the gripper jaws and the detector, showing diagrammatically the greater range of movement of the detector at a constant speed and the lesser gradually retarded closing movement of the jaws. Fig. 6, is a detached view in side elevation of a slightly modified form of gripper mechanism. Fig. 7, is a broken rear view of the toggle connections illustrated in Fig. 1.

Similar reference characters indicate like parts throughout the several views.

When used in connection with a signature gathering machine, the gripper arm 1, is mounted to swing between the signature hopper 2, and the conveyer 3, of the signature gathering machine, it preferably being carried by a rock shaft 4, which is caused to oscillate by means of a cam or other suitable device, (not shown). Carried by the lower end of the gripper arm and secured thereto in any desired manner, is a relatively fixed gripper jaw 5, with which is adapted to coöperate a movable or pivoted jaw 7. This movable jaw is preferably pivoted between two dependent ears 6, of the fixed jaw, on a pivot pin 8, but if so desired, the jaw could be pivoted to the arm itself, or could be mounted in any other desired manner.

The suckers for separating the signatures or sheets, are carried by a rock shaft 9, one of the suckers 10, being shown in Fig. 1. The suckers are connected with the suction apparatus (not shown) by means of tubes 11, or other suitable connections. It will be noted that each sucker is a single member having a single suction mouth 12.

The lower gripper jaw is U-shaped or in the form of a yoke, as best illustrated in Fig. 2, it having bifurcated or forked ends 13, adapted to pass on both sides of the sucker, or in other words, to straddle the sucker, as shown in Figs. 2 and 3. The upper jaw consists of the shank portion 14, carrying the flattened and broadened head portion 15, which overlies the forked ends of the lower jaw. The meeting faces or gripping surfaces of the gripper jaws are curved concavo-convex, as at 16, to partially intermesh. The upper jaw is preferably the one with the concave surface, while the lower jaw has a corresponding convex surface, but this arrangement might be reversed, and instead of being curvilinear, the gripping surfaces could be angular. By means of this arrangement of the jaws, the sheet is bent or crimped at the edge seized, but the curvature of the jaws is such that the crimp only extends part way across the sheet, so that the far edge of the sheet is unaffected. In this way, the near edge of the sheet is foreshortened and the body of the sheet is stiffened so that it may be held by the gripper without collapsing. The manner in which the sheet is stiffened and supported is illustrated in Fig. 4. To increase this bending of the sheet, the lateral edges of the head of the upper jaw may slightly overhang the sides of the lower jaw, as shown at 17, in Fig. 2. The pivoted jaw is provided with a leverage extension 18, extending in rear of its pivotal point of support to which is connected the means for opening and closing the jaws.

The preferred form of the opening and closing means for the jaws is illustrated in Fig. 1, but the jaws themselves may be considered independently of any operating means, and for the purpose of certain claims, they are so considered. Different operating means may of course be employed for opening and closing the jaws, and in Figs. 1 and 6 of the present application, I have illustrated two forms of operating means, both possessing certain features in common. In both of the forms illustrated, a toggle lever 19, is pivoted at a point between its ends or substantially mid-length, at 20, to the gripper arm, so as to rock upon said arm. To the upper end of this toggle member, is pivoted a connection 21, which in turn is

connected to a rocker arm 22, on the rock shaft 23. This rock shaft is actuated by any suitable mechanism, such as a cam (not shown). Connected to the leverage extension of the movable jaw, is a member 24, which is preferably adjustable to regulate the opening and closing movement of the jaws. This adjustment is preferably accomplished by making this member in two telescoping parts, a sleeve part 25, and a rod part 26, which fits within the sleeve, the rod part being threaded, and the nut 27, serving to adjust the combined length of the two parts. The adjustment of this jaw-actuating rod might be accomplished in other ways, or for certain purposes, this rod might be non-adjustable. In the two forms illustrated, different means of connection between the actuating rod and the toggle member are shown.

In the preferred construction (Fig. 1), a second toggle lever 28, is pivoted to the lower or free end of the first toggle lever at the point 29, which point forms the center of the toggle mechanism, and the free end of the second toggle lever, is pivotally connected at 30, to the upper end of the actuating rod. This arrangement permits of a lifting movement of the actuating rod and an expanding movement of the toggle levers. A swinging link 31, pivotally connected between the gripper arm and the upper portion of the actuating rod at the point 32, serves to retain the movement of the rod in approximate parallelism to the gripper arm. In order to reduce friction and to prevent any binding between the toggle members, I preferably arrange these members so that the pivot joints between them, all lie in the same plane. One way of accomplishing this result is illustrated in Fig. 7. Here it will be seen that the second toggle member is disposed angularly or obliquely between its ends, thus bringing the pivot mounting of the first toggle member, the center pivot between the two toggle members, the pivot connection between the second toggle and the actuating rod, and the pivot connection between the swinging link and the actuating rod all in the same line.

From the center of the toggle joint, projects the detector arm 33, carrying at its end the finger 34, which is normally adapted to pass through a gate or opening 35, in the detector plate 36. This gate or detector opening may be adjustable by means of superposed plates provided with suitable openings, as shown in Patent No. 761,496, but this detector mechanism could be varied in a number of ways. The detector arm might, and preferably would be made integral with the first toggle member.

In the form illustrated in Fig. 6, the upper end of the actuating rod is connected direct to the first or rocking toggle lever and the rod itself forms the second member of the toggle mechanism, the retaining link and the short toggle being unnecessary in this form. Here the detector is carried by the upper toggle member, it preferably projecting from a point off the center of the pivotal support of the rocking toggle member. As the toggles straighten out due to the action of the actuating or rock shaft and the upper connection, a gradually retarded movement is communicated to the actuating rod, and the jaws are thereby closed at a gradually decreasing rate of speed. The detector arm however moves at a constant rate of speed and on account of its length has a greater range of movement than the jaws. The movement of the detector is therefore exaggerated with respect to the jaws. The movement of the jaws is less and is slower when the jaws are more nearly closed, in the act of gripping the sheet, but as the movement of the detector is constant and of greater range, the slightest variance in the thickness or size of the sheet, causes a wide variance in the position of the detector. For this reason a very slight variation from the proper position of the jaws, causes the detector to fail to register with the detector opening in the detector plate, and the detector mechanism becomes operative. The detector is therefore extremely sensitive in its action.

It will be understood that the detector operates to stop the machine as in the manner shown in my Patent No. 761,496, of May 31, 1904 or performs a like service in the event of the gripper taking a faulty signature or failing to take any signature at all, and in some cases, the detector is utilized to act upon certain parts of the machine to cause a separation of all books containing faulty signatures, from the perfect books as disclosed in a co-pending application filed August 11, 1908, Serial No. 447,977.

In Fig. 5, is illustrated diagrammatically the proportionate movements of the gripper jaws and the detector, the horizontal lines 37, representing the opening and closing movement of the jaws, showing how as they close, the movement is gradually retarded, and the radial lines 38, representing the greater range of movement of the detector at a constant speed. In this view, the point 39, represents the center on which the detector swings, and the line 40, the arc through which the detector moves.

What is claimed, is:

1. A gripper for signature gathering or other machines comprising a gripper arm, a fixed jaw carried by the arm, a pivoted jaw coacting with the fixed jaw and provided with a leverage extension, a rock shaft, a toggle member pivoted to rock on the gripper arm, connection between one end of the toggle member and the rock

shaft, a second toggle member pivoted to the opposite end of the first toggle member, an actuating rod connected between the leverage extension of the pivoted jaw and the free end of the second toggle member, and a retaining link pivoted between the gripper arm and the actuating rod.

2. A gripper device for signature gathering or other machines comprising a gripper arm, a support for the gripper arm, a fixed jaw carried by the gripper arm, a pivoted jaw coacting with the fixed jaw and provided with a leverage extension, an actuating shaft, a toggle member pivoted to rock on the gripper arm, connection between one end of the toggle member and the actuating shaft, a second toggle member pivoted to the opposite end of the first toggle member, an actuating rod connected to the leverage extension of the pivoted jaw and having pivotal connection with the free end of the second toggle member, a swinging link connected between the gripper arm and the actuating rod, and a detector arm carried by the pivotal center of the two toggle members.

3. In a gripper mechanism for signature gathering or other machines, a gripper arm, stationary and movable jaws carried thereby, a toggle lever pivoted to rock on the gripper arm, a rock shaft and means for actuating the same, connection between the rock shaft and the upper end of the toggle lever, a second toggle lever connected to the lower end of the first toggle lever, and an actuating rod connected between the second toggle lever and the movable jaw.

4. A gripper for signature gathering or other machines, comprising, a gripper arm, a fixed jaw carried by the arm, a pivoted jaw coacting with the fixed jaw and provided with a leverage extension, a toggle member pivoted to rock on the gripper arm, a connection with one end of the toggle member for operating the same, a second toggle member pivoted to the opposite end of the first toggle member, an actuating rod connected between the free end of the second toggle and the leverage extension of the pivoted jaw, and retaining means connected with the actuating rod for guiding said rod in an up and down movement as the toggles are operated.

5. In a signature gathering machine, a gripper arm, relatively fixed and movable jaws carried thereby, a pair of toggle levers connected between the movable jaw and a fixed point on the gripper arm, said toggle levers being so arranged as to close the jaws when in straightened position, a detector arm carried by the toggles, and means for operating the toggles to open and close the jaws, whereby upon the closing movement of the jaws, the detector finger will have a constant rate of movement, and the jaws will have a constantly decreasing rate of movement as the toggles near the straightened position.

6. In a signature gathering machine, cooperating gripper jaws, means for opening and closing said gripper jaws, embodying pivoted toggle levers connected between one of the gripper jaws and a relatively fixed point, means for making and breaking the toggle so formed, to alternately close and open the jaws, the toggle levers being of a length such that when the toggle is in a substantially straightened condition the gripper jaws will be closed, whereby as the toggle approaches the straightened position, the spreading action of such toggle being gradually less, the grippers will be closed at a correspondingly reduced rate of speed, and a detector member carried by one of the toggle levers so as to have a relatively constant movement at the time that the gripper jaws are being closed at a gradually retarded rate.

7. In a signature gathering machine, a gripper arm, relatively fixed and movable jaws carried thereby, a pair of pivoted toggle levers forming a toggle, connected between the movable jaw and a fixed point on the gripper arm, means for making and breaking the toggle so formed, to alternately close and open the jaws, the toggle levers being of a length such that when the toggle is in a substantially straightened condition the gripper jaws will be closed, whereby as the toggle approaches the straightened position, the spreading action of such toggle being gradually less, the grippers will be closed at a correspondingly reduced rate of speed, and a detector member carried by one of the toggle levers so as to have a relatively constant movement at the time that the gripper jaws are being closed at a gradually retarded rate.

8. In a signature gathering machine, a sucker for separating the signatures, pivoted gripper jaws, one of said gripper jaws being forked so as to straddle the sucker and grip the signature on opposite sides of the sucker, the other gripper jaw having a broadened head to coöperate with the forked terminals of the first jaw, and the two jaws having their gripping surfaces curved transversely of their length so as to crimp the signature held thereby and stiffen it against collapsing.

9. In a signature gathering or like machine, coöperating gripper jaws, means for opening the jaws and for closing the jaws at a gradually reduced rate of movement, and a detector member connected with the opening and closing means and moved thereby at a substantially constant rate of movement during the gradually reduced closing movement of the jaws.

10. In a signature gathering machine, co-

operating gripper jaws, and means for opening and closing said jaws, embodying pivoted toggle levers pivoted between one of the jaws and a relatively fixed point to form a toggle, the toggle levers being of such length that they will close the jaws when in substantially straightened position, whereby as the toggle approaches the straightened position the jaws will be closed at gradually reduced rate of speed, and means for making and breaking the toggle to close and open the jaws.

11. In a signature gathering machine, the combination with a sucker having a single suction mouth and arranged to engage the signature or sheet only at the one point, of cooperating gripper jaws arranged to take the signature separated by the sucker, one of the said gripper jaws being forked to straddle the sucker and the other gripper jaw having a broadened head to pass over the top of the sucker and to be engaged by the forked terminals of the other jaw, and the said two jaws having their co-acting gripping surfaces curved transversely of their length whereby to crimp the edge portion of the signature gripped to stiffen the same and prevent collapsing thereof.

Signed at New York, borough of Manhattan in the county of New York and State of New York this 6th day of August A. D. 1908.

CHAS. A. JUENGST.

Witnesses:
AXEL V. BEEKEN,
GEO. A. MARSHALL.