July 11, 1939. W. HOWEY 2,165,856

METHOD OF INTRODUCING SIGNALS TO AND RECEIVING SIGNALS FROM TELEPHONE CIRCUITS

Filed April 4, 1938

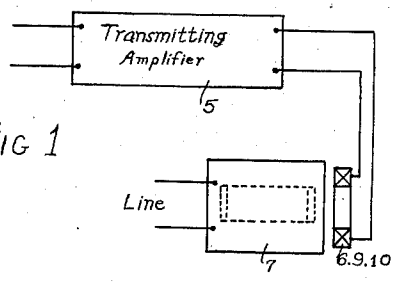

FIG 1

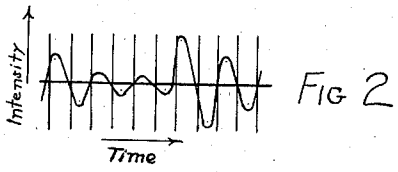

FIG 2

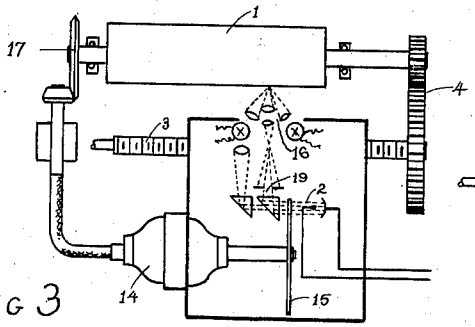

FIG 3

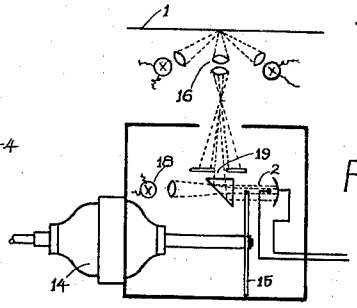

FIG 4

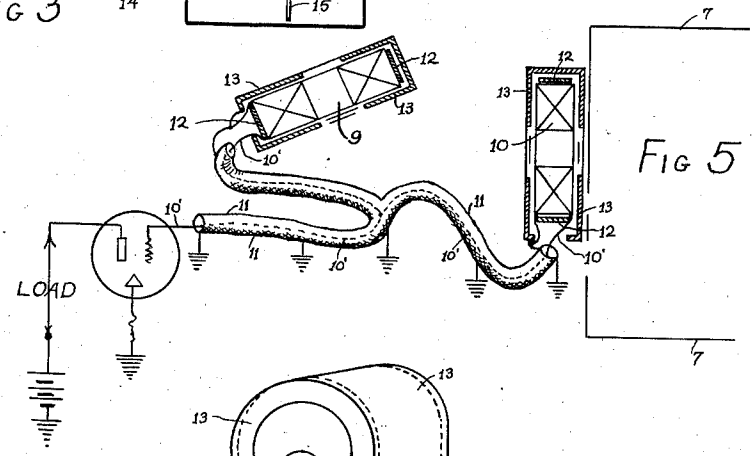

FIG 5

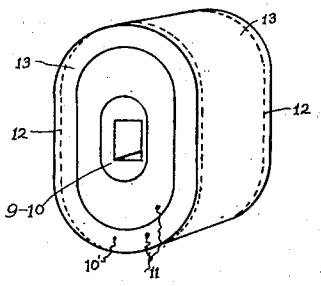

FIG 6

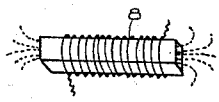

FIG 7

Walter Howey INVENTOR.

BY N. S. Armstutz

ATTORNEY.

Patented July 11, 1939 2,165,856

UNITED STATES PATENT OFFICE

2,165,856

METHOD OF INTRODUCING SIGNALS TO AND RECEIVING SIGNALS FROM TELEPHONE CIRCUITS

Walter Howey, Demarest, N. J.

Application April 4, 1938, Serial No. 199,990

10 Claims. (Cl. 178—5.8)

My invention relates to improvements in the method of introducing signals to and receiving signals from telephone circuits and it more especially includes the features pointed out in the annexed claims.

My invention is directed broadly toward the reception of speech or other intelligence, such as may modulate a common low fidelity audio frequency carrier having a periodicity of 1800 cycles per second and receive such signals by two or more coils in series with each other to thereby render external disturbances out of phase with the receiving coil placed in the magnetic field of a solenoid in the telephone terminal box; that utilizes the constant propogation of such audio frequency carrier current; that modifies the amplitude of the carrier current in accordance with the characteristics of the intended signals; that recognizes such signals without making any physical connection to the terminal box; and that specifically receives the changes in intensity according to the inherent variations of the propogated signals; and in addition I may also use the constant frequency carrier current for holding the sending and receiving machines in step with each other and for starting either in proper phase.

This application is a continuation in part of Serial No. 127,989, filed February 24, 1937.

With these and other ends in view I illustrate in the accompanying drawing such instances of adaptation as will disclose the broad underlying features of the invention without limiting myself to the specific details shown thereon and described herein.

Fig. 1 is a diagrammatic view of an inductive method associated with a telephone terminal box for receiving signals.

Fig. 2 is a graph showing the picture modulation of the amplitude of a carrier current while the frequency remains constant.

Fig. 3 is a diagrammatic view showing a method for driving a cylinder and simultaneously generating a carrier current and producing a minimum signal of constant frequency.

Fig. 4 is also a diagrammatic view showing another method for maintaining a minimum signal level.

Fig. 5 is a diagrammatic view of an arrangement for inductively introducing carrier picture signals onto a telephone line or receiving such signals therefrom without any physical connections to the line.

Fig. 6 illustrates a method of shielding an inductance unit.

Fig. 7 is a detached diagrammatic view of a conventional coil associated with magnetic lines emanating from the core.

In practicing my invention I may use whatever alternatives or equivalents of method or structure that the exigencies of varying conditions may demand without departing from the broad spirit of the invention.

The very broad basis of my invention as stated above is the use of any desired constant frequency carrier current which is present at all times during the transmission of a picture. The carrier current is modulated in amplitude in accordance with the pictorial characteristics of the subject. This includes the broad idea of propagating modulated carrier currents to also simultaneously constitute picture signals on a telephone line without any physical connections therewith. It further includes the reception of such propagated carrier picture currents from the telephone line without any physical connection to it.

The picture to be transmitted is mounted on a cylinder 1 (Fig. 3), where it is scanned by a photo electric cell 2 and an associated optical system 16. The variable currents thus produced are suitably amplified and caused to modulate a constant frequency carrier current of approximately 1800 cycles per second. The carrier current may be generated by any of several well known methods, such as by means of a commutator, tuning fork, A. C. light source, inductor alternator or light chopper, or by a specially prepared picture consisting of parallel lines of varying widths, or by placing over the picture to be sent, a transparent film covered with closely spaced opaque lines; however I prefer to use a separate source of light and a tone wheel. The carrier picture current may be made to conform to the tonal variations of the subject by any of several well known methods, such for instance as allowing the picture characteristics to produce a modulation of the light which impinges the photo electric cell by reflection from the subject or by transmission through a film containing the subject. Such a modulated carrier-picture current may then be amplified and transmitted over a telephone line to the receiver. At the receiving end the signals may be amplified in any suitable manner, rectified and used to modulate light projected for reproducing the picture.

The transmitter and receiver may be kept in exact step by the cooperation of minimum volume carrier impulses (Figs. 3 and 4) which are present in the system at all times during the trans-

mission of a picture except when rectified by the receiver, or the machines may be synchronized otherwise by any convenient method.

The assembly of the optical system, aperture, photo-tube, motor and tone disk is mounted so as to be moved lengthwise of the cylinder 1 by a lead screw 3 driven by gears 4 and any suitable drive. The output of the photo tube 2 may be amplified by any suitable means 5 and introduced into a telephone line by an inductance 6 placed adjacent a telephone terminal box 7.

Since the amount of light reaching the phototube 2 at any instant will be proportional to the one density of the subject being scanned at that instant, the carrier signal may be said to be modulated in amplitude. The form of the amplified signal is graphically shown in Fig. 2. The receiver may be of any desired form, in which a light sensitive film has projected onto it a point of light that is made variable according to the subject by the modulated carrier waves. There is a displacement between the light and the film. The incoming picture signals are amplified to energize a crater lamp or other suitable light recording means carried in a conventional manner and moved lengthwise of the receiving cylinder.

The signals are put onto a telephone network by inductance or capacitance as stated above. As found in picture transmission both machines may be kept in synchronism by a number of different expedients. In my present system I utilize a constant frequency carrier current to serve three separate and distinct purposes which however are interdependent. These purposes enable me to secure very accurate transmission. They include the use of the same means, first as a carrier to override line noise and interruptions, second for synchronizing and phasing and third when modulated to transmit the picture. By using a constant and continuous frequency of 1800 cycles with a compensating network for amplitude modulation, I maintain a linear frequency response (see Fig. 2).

Variations of light and shade of a transmitted continuous tone picture, such as a photograph, seldom recur with encyclical frequency. They are aperiodic. An unvarying tone such as black, gray or white during transmission may be continuous for more or less seconds and even extended over minutes as dictated by the aperiodic characteristic of the subject. In consequence of this the amplitude modulations of the picture characteristics which are superposed on the linear 1800 cycle carrier are in themselves aperiodic and seldom if ever recur with any cyclical frequency. Through the use of an 1800 cycle carrier current this system will transmit an all black area or an all white area (minimum or maximum or any intermediate amplification) and record it. Throughout the time of transmission the only periodic frequency present in the system is that of the 1800 cycle carrier. Consequently it may be seen that the system will transmit any picture regardless of its composition or its tonal variations.

At the receiving end, the incoming signal may be taken from the telephone terminal by a method that does not affect the electrical characteristics of the telephone network in any way. It consists of two parallel connected high impedance induction coils connected in such a manner that undesirable stray signals will be cancelled by phase reversal and the desired signals allowed to pass to an amplifier. The inductance coils may be placed adjacent any terminal coil commonly used for telephone purposes. The coils will have induced in them the picture signals at the receiving end and at the sending end the signals in one or more coils may be inductively transferred to a coil at the telephone terminal.

One of the features of this invention is that it meets the rigid specifications of the telephone companies, in that it does away with direct wire connections to the lines and with otherwise disturbing elements such as introducing direct current to the system, grounding the system or overloading the system.

The method outlined above is illustrated by Fig. 7, where 8 represents a source of electromagnetic vibrations, constituting a field of force, changing in amplitude with the frequency of the signal, such as an open core transformer, or an air or iron core inductance coil, through which pass the signal currents. Inductance coils 9 and 10 are connected in parallel and they have one common connection 10' to the center conductor of a concentric cable, and the other connection to the outer or grounded conductor 11 of said concentric cable. One coil or solenoid 9 is placed along one side of a terminal box 7 and another coil or solenoid 10 may be placed adjacent the other side of the same box. The coils may also be approximately on the same axis as the telephone coil in the box, or they may however be placed in different angular or other positions in relation to the telephone terminal coil.

While only two coils are shown connected in parallel, it is obvious that any number of coils may be thus connected for cancelling out the effects of stray fields from more than one direction by positioning the coils differently with respect to each other, without departing from the broad spirit of the invention.

In order to prevent inductive and capacitive feed back and to shield the coils themselves from stray fields, metallic shields 12 are provided to cover the edges of the coils 9 and 10. In order to further shield the coils, shields 13 are provided to shield the ends of the coils. The shields 13 and 12 may be electrically and mechanically grounded to the outer conductor 11 of the concentric cable. The arrangement of the shields is more clearly shown in Fig. 6.

The shielding described here is only partial and is designed to be directional in its effect. Complete shielding would not be practical, since in that case the signal as well as the undesirable noise would be eliminated. This invention provides for shielding which is not a closed circuit and so does not effect the frequency characteristic of the signal received or of the recording circuit.

The shielding as it is used in this instance is different in its effect and use from the shielding used in electrostatically and magnetically shielded transformers. This is partly due to the fact that the coils are not coupled inductively with each other, and therefore have no effect one upon the other as do the primary and secondary coils of a transformer. Moreover, the arrangement is such that undesirable signals are cancelled by phase reversal not dependent on mutual inductance between the coils.

The picture, as previously mentioned, is received on a light sensitive film which is mounted on a rotatable cylinder which is in a conventional light-tight housing, not shown. The housing moves lengthwise of the cylinder without allowing any light to reach the photographic film or paper, except that from a receiving lamp or any desired form of light controlling shutter. When

the reception of a picture is completed the film is removed from the light-tight box in the dark room and developed.

As the picture is being received all the light passes through a narrow slit similar to 19 of Figs. 3 and 4 which bears a lineal relation to the width of the line advance during the scanning.

The scanning system is conventional in its arrangement of a narrow slit through which light reflected from the picture passes, or alternatively transmitted light passes through a picture on a rotatable drum or cylinder. This light is projected to a photo-tube, and its variations affect the tube to produce currents of variable amplitude which modulate the carrier signals. These may be amplified in any well known way, such as grid modulation, plate modulation or screen grid modulation.

In order to maintain a minimum signal level required to over-ride noise on the line and to provide for synchronism, a certain amount of the carrier signal may be allowed to pass through the amplifying system without being modulated by the photo-tube output. Thus, when there is no light reflected from the picture, as in scanning black, a pre-determined amount of synchronizing carrier signal will still be transmitted over the line. At the receiving end, the photographic recording may be adjusted so that the minimum signal will be the limit in either the shadows or high-light part of the picture and increase of the tone will add or subtract from the shading to reproduce the subject as a negative or positive.

Fig. 1 shows, diagrammatically, how the picture signal is introduced into a telephone line. Here 5 indicates an amplifier and 6 a coil of proper proportions and impedance to match the plate resistance of the output tube of the amplifier. The coil is placed in close magnetic coupling with the induction coil and the terminal box 7 of the telephone system so that variations of signal enter the line through a variation of the magnetic flux that includes the windings of the transformer in the box.

Figs. 3 and 4 show how the scanning cylinder 1 of the transmitter may be driven in synchronism with the generation of the carrier signal. Here the driving motor 14 is mounted on the scanning carriage. On one end of the shaft of the motor is the light chopping disk 15, which breaks up the light entering through the optical system 16 before it reaches the photo-tube 2. On the other end of the shaft is connected a flexible cable such as is used for operating a dentist's drill. The other end of the cable is connected to the gear train 17 which drives the cylinder for scanning. The object of this arrangement is to prevent hunting of the light chopper with respect to the cylinder.

The arrangement shown in Fig. 3, as stated, provides for the generation of a minimum volume signal by diverting a portion of the light from the exciter lamp through a suitable optical system and past the light chopper to the photo-electric cell or photo-tube. This causes all synchronous movements of transmitter and receiver to be locked with the transmitting motor. Should this motor hunt or change speed, within limits, all other movements, such as speed of scanning and receiving drums, line advance of transmitter and receiver and duration of amplitude in scanning and recording the picture will swing in harmony with it.

In Fig. 4 another method is shown for producing a minimum level signal. Here light from an auxiliary light source 18 is directed through the light chopper 15 to the photo-tube 2. It is important in all cases of the generation of a minimum signal by the use of light not coming from the picture, that the phase of the light coming from the picture and the light from the auxiliary source, whether diverted from the scanning light or generated separately, be the same, i. e., the two lights should strike the photo-cell at the same instant, for any deviation from this condition will cause distortion of the signal and result in a poor picture being received.

In this system of transmission and reception I may employ inductance, capacitance, or any combination of these to hold the modulated signals within practicable signal levels.

What I claim is :

1. A telephone signalling system comprising a telephone line having a telephone terminal box, an induction coil in said box connected to the telephone line, means for electromagnetically coupling a pair of separate parallel connected inductive coils to the induction coil in the telephone terminal box for optimum results.

2. In telephone signalling, a telephone system terminal box including therein an induction coil, a pair of parallel connected inductive coils positioned within the magnetic influence of the induction coil within the box, and means for inducing signals in the induction coil of the terminal box and simultaneously inducing signals in the adjacently placed interconnected inductive coils.

3. A telephone signalling system which comprises a cooperating terminal box, an induction coil positioned within the box and connected to the telephone line, a pair of inductive coils positioned adjacent to and within the influence of the induction coil, and means for subjecting the inductive coils to the varying magnetic flux of the induction coil to thereby exchange signals between the associated coils.

4. In a system of the class described the process of detecting electrical signals, which consists in causing such signals to set up a varying magnetic field around an induction coil in a telephone terminal box, in inducing similar signals in another coil placed within the influence of the magnetic lines of the induction coil, in causing stray fields to induce undesired signals in a second coil in parallel relation to the first coil and in opposite phase to like undesirable signals, in shielding said coils and their connections from the effects of stray fields, and in amplifying the desirable signals.

5. A telephone signalling system including the method of inductively detecting signals present in such system which consists in causing extraneous signals in a telephone terminal coil to be induced in a separate coil in parallel relation and in opposite phase to like extraneous signals induced therein, and in shielding said coils and their connections electrostatically and magnetically from stray fields.

6. In a system of the class described the process of inductively detecting a signal consisting of causing the signal to be induced in a coil, of causing stray fields to induce undesired signals in another coil, in parallel connection thereto, in opposite phase to like undesirable signals induced in the first coil, of shielding said coils and their connections from the effects of stray

fields and of amplifying the desired signals to a usable volume.

7. In a system of the class described, the process of signal detection, consisting of causing signals to be induced in a plurality of inductance coils, of causing stray fields to induce undesired signals in a plurality of other coils in parallel connection thereto in opposite phase to like undesired signals induced in the first set of coils, of shielding said coils and their connection from the effects of stray fields and of amplifying the desired signals.

8. In picture telephony, the process of inductively detecting a picture signal, consisting in causing extraneous picture signals from a telephone terminal coil to be induced in a coil in parallel relation and in opposite phase to like extraneous picture signals induced in another coil, and in shielding said coils and their connections electrostatically and magnetically from stray fields.

9. In a picture transmitting system of the class described the process of detecting a picture signal, which consists in causing the signal in a telephone terminal coil to be induced in an adjacently positioned induction coil, in causing stray fields to induce undesired signals in another adjacently positioned coil in parallel relation thereto, and in opposite phase to like undesirable signals induced in the parallel coil, in shielding said coils and their connections from the effects of stray fields, and in amplifying the picture signals.

10. In picture telephony, a telephone system terminal box including an induction coil therein, a pair of solenoids connected in parallel positioned adjacent the box, and means for simultaneously inducing picture signals in the induction coil and the solenoids.

WALTER HOWEY.