United States Patent [19]

Green

[11] **3,925,773**

[45] **Dec. 9, 1975**

[54] **ALARM SIGNAL PROCESSING SYSTEM AND METHOD**

[75] Inventor: **Robert Leonard Green,** Teddington, England

[73] Assignee: **Emergency Products Corporation,** Parsippany, N.J.

[22] Filed: **Aug. 31, 1973**

[21] Appl. No.: **393,566**

[52] **U.S. Cl.**..... **340/258 A;** 340/276; 343/7.7

[51] **Int. Cl.²**..... **G08B 13/18**

[58] **Field of Search**..... 340/258 A, 261, 258 R; 343/5 PD, 7.7

[56] **References Cited**

UNITED STATES PATENTS

3,706,961	12/1972	Sugiura	340/258 A
3,727,216	4/1973	Antonio	340/258 A
3,728,721	4/1973	Lee et al.	340/258 A

Primary Examiner—Glen R. Swann, III

[57] **ABSTRACT**

Digital system and method for distinguishing alarm conditions from spurious disturbances. The system is connected to the output of an existing alarm system, and it includes an oscillator which produces a cyclical signal in response to the alarm system output signal. The oscillator signal is counted by a counter which is reset periodically, and an alarm signal is delivered if the counter reaches a predetermined level before being reset.

4 Claims, 1 Drawing Figure

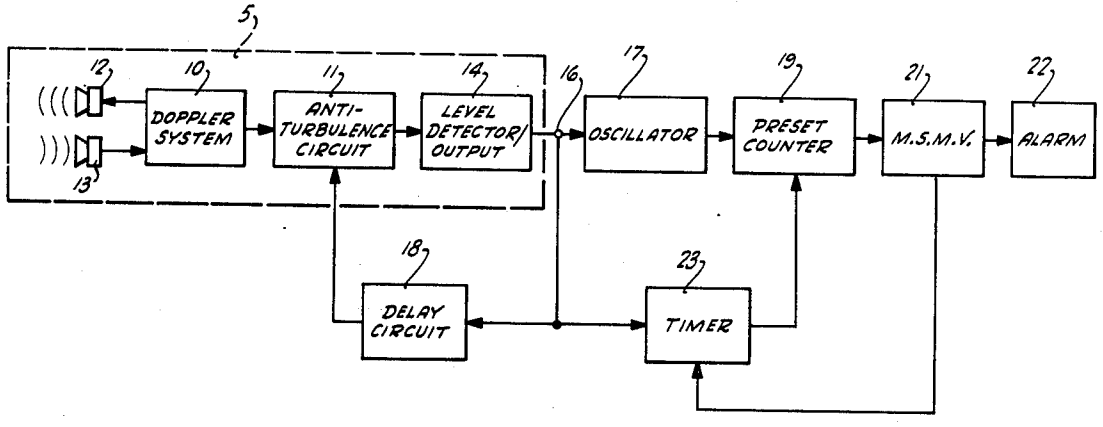

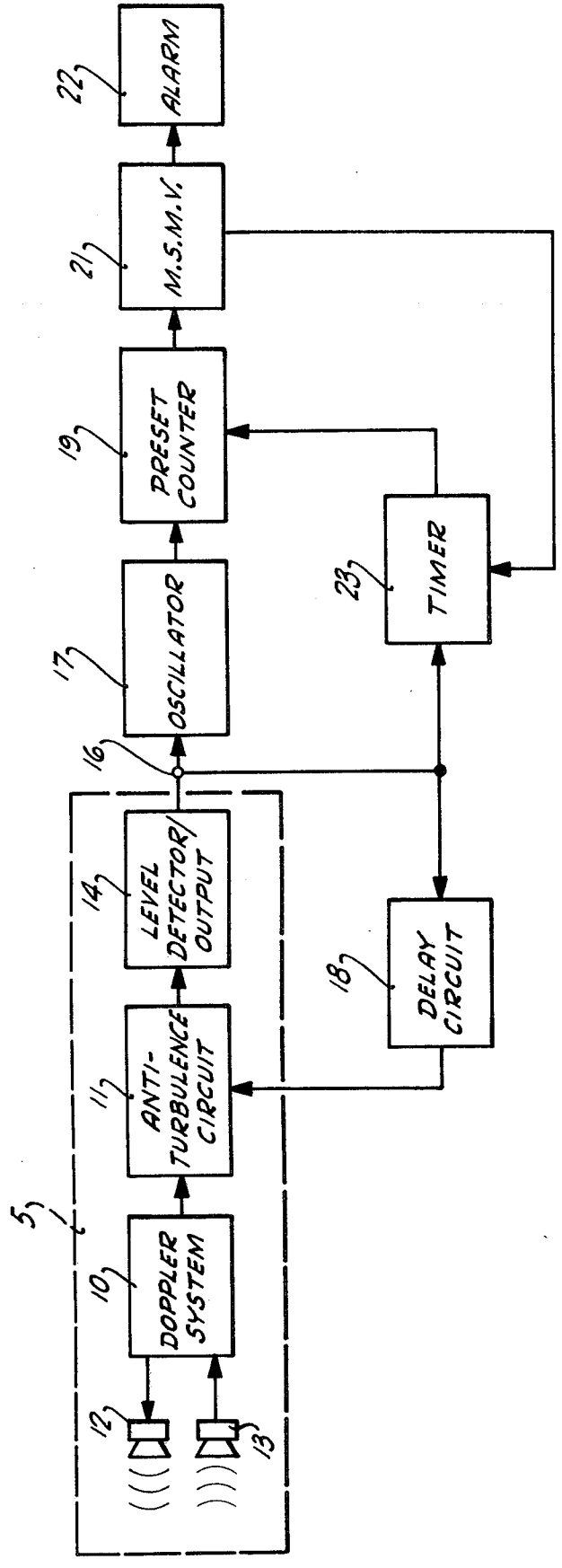
ALARM
22
M.S.M.V.
21
PRESET COUNTER
19
OSCILLATOR
17
TIMER
23
16
LEVEL DETECTOR/ OUTPUT
14
ANTI-TURBULENCE CIRCUIT
11
DELAY CIRCUIT
18
DOPPLER SYSTEM
10
5
12
13

ALARM SIGNAL PROCESSING SYSTEM AND METHOD

BACKGROUND OF THE INVENTION

This invention pertains generally to security alarm systems and more particularly to a system and method for processing alarm signals to distinguish alarm signals from spurious disturbances.

In conventional Doppler alarm systems, energy is transmitted at a predetermined frequency into a space to be protected. Energy reflected by objects in the space is received by a sensor. When any movement or other disturbance occurs in the space, a Doppler frequency shift occurs, and the signal received by the sensor differs in frequency from the transmitted signal by an amount corresponding to the rate at which a disturbing object moves. The frequency-shifted signal is detected and used to activate an alarm.

Doppler alarm systems inherently have high sensitivity, and they are subject to false alarms in response to disturbances of short duration, such as pipes knocking or a heater turning on. There is a need for a new and improved system and method which can distinguish disturbances of short duration from the movements of an intruder.

SUMMARY AND OBJECTS OF THE INVENTION

The invention provides a signal processing system and method utilizing a digital approach for distinguishing the movements of an intruder from disturbances of shorter duration. The system is connected to the output of an existing alarm system, and it includes an oscillator which produces a cyclical signal in response to the alarm system output signal. The oscillator signal is counted by a counter which is reset periodically, and an alarm signal is delivered if the counter reaches a predetermined level before being reset.

It is in general an object of the invention to provide a new and improved system and method for distinguishing alarm signals from signals produced by other disturbances.

Another object of the invention is to provide a system and method of the above character utilizing digital techniques.

Another object of the invention is to provide a system of the above character which can be connected to the output of an existing alarm system.

Additional objects and features of the invention will be apparent from the following description in which the preferred embodiments are set forth in detail in conjunction with the accompanying drawing.

BRIEF DESCRIPTION OF THE DRAWING

The drawing is a block diagram of one embodiment of a signal processing system incorporating the invention.

DESCRIPTION OF THE PREFERRED EMBODIMENT

The invention is illustrated in connection with an alarm system **5** which in the embodiment illustrated includes a Doppler system **10** and an anti-turbulence circuit **11** which can, for example, be of the type disclosed in U.S. Pat. No. 3,638,210, issued Jan. 25, 1972. It will be understood, however, that the invention can be utilized with other types of alarm systems. In the system illustrated, energy of a predetermined frequency is delivered to a transducer **12** from which it is transmitted into a room or other area to be protected. A receiving transducer **13** senses energy reflected by objects in the protected space, and the system includes means for processing the received energy to produce a Doppler signal having a frequency corresponding to the rate of movement of the objects which reflect the energy. The energy preferably is in the ultrasonic range, although it can be a high audio frequency or other suitable frequency such as radio frequency energy, if desired.

The Doppler signal passes to the anti-turbulence circuit which provides some discrimination between signals corresponding to the movements of intruders and signals produced by other disturbances such as air turbulence. This discrimination is generally made on the basis of the magnitude and/or frequency of the signals, and in the system shown in U.S. Pat. No. 3,638,210, for example, it is made on the basis of frequency and duration.

As illustrated, alarm system **5** includes an output stage **14** which comprises a level detector, such as a Schmitt trigger, or other suitable device for delivering an output signal to an output terminal **16** when the signal from the anti-turbulence circuit reaches or exceeds a predetermined level.

Connected to the output of the alarm system are an oscillator **17** and the input of a delay circuit **18.** The output of the delay circuit is connected to a reset input of anti-turbulence circuit **11.** In the preferred embodiment, the delay circuit comprises a one-shot multivibrator, and the delay circuit and anti-turbulence circuit are arranged in such manner that the anti-turbulence circuit is reset a predetermined time after the level detector fires if the Doppler signal is below a predetermined level. The circuit is not reset if the signal is at or above the predetermined level.

Oscillator **17** can be a circuit of conventional design which produces a cyclical output signal. For example, it can be an astable multivibrator or a relaxation oscillator. The output of the level detector in the output stage of the alarm system is applied to the oscillator in such manner that the oscillator is actuated to produce an output signal only when the level detector is in its fired condition, that is when the Doppler signal exceeds the level set by the level detector. The level detector can either control the energization of the oscillator, as illustrated, or it can control a logic gate through which the oscillator signal passes. If a logic gate is employed, the oscillator can operate continuously.

The output of the oscillator is applied to the input of a preset counter **19.** This counter produces an output signal when the count registered in it reaches a predetermined level. In the preferred embodiment, counter **19** is a digital counter, although other types of counters can be used, if desired. For example, it can consist of an integrator followed by a level detector.

The output of counter **19** is connected to the trigger input of a monostable multivibrator **21** which produces an output pulse in response to the output of the counter. The output of multivibrator **21** is connected to an alarm **22** of convention design.

Means is provided for resetting counter **19** to its initial level a predetermined time after the Doppler signal is received. This means includes a timer **23,** which in the preferred embodiment comprises a monostable multivibrator having a period on the order of 10 seconds to 2 minutes. The trigger input of timer **23** is connected to the output of level detector **14,** and the out-

put of the timer is connected to the reset input of counter **19.** The output of multivibrator **21** is connected to the reset input of timer **23** to provide means for resetting counter **19** to its initial level in the event the alarm is actuated.

Operation and use of the system described above, and therein the method of the invention, can be described briefly. Doppler system **10** and anti-turbulence circuit **11** operate in a known manner to provide a Doppler signal at the output of the anti-turbulence circuit, the Doppler signal having a frequency corresponding to the rate of movement in a protected area. If the signal exceeds the predetermined level set by the level detector in output stage **14,** the level detector fires, actuating oscillator **17.** The oscillator remains actuated as long as the level detector is in its fired condition, that is for the duration of the Doppler signal. The number of cycles in the signal produced by the oscillator is counted by counter **19,** and when the count registered reaches the predetermined number, the counter delivers an output signal to multivibrator **21.** The multivibrator fires in response to this output signal and actuates alarm **22.**

Timer **23** is triggered by the initial firing of the level detector in the output stage of the alarm system, and it delivers a reset signal to counter **19** a predetermined time after the level detector fires. This signal resets the counter to its initial level. Thus, the alarm will be actuated only if the Doppler signal causes oscillator **17** to produce a predetermined number of cycles within a predetermined period of time.

When the alarm is actuated, multivibrator **21** delivers a reset signal to timer **23,** and the timer resets counter **19.**

In the event that the Doppler signal exceeds the level set by the level detector but is below the level determined by delay circuit **18** and anti-turbulence circuit **11,** the anti-turbulence circuit will be reset after the level detector fires, and the level detector will remain in its fired condition only briefly. In this case, oscillator **17** will be actuated only briefly, and counter **19** will be reset before it can register the number of counts required to actuate the alarm system. If the Doppler signal exceeds the level set by the delay circuit and the anti-turbulence circuit, the anti-turbulence circuit will not be reset, and the system will operate as described previously.

Thus far, the invention has been described with specific reference to a particular Doppler alarm system. However, it will be understood that it can be used to process the signals produced by other types of alarm systems as well, and in most cases it can simply be connected to the output of an existing system.

It is apparent from the foregoing that a new and improved alarm signal processing system and method have been provided. While only the presently preferred embodiments have been described, as will be apparent to those familiar with the art, certain changes and modifications can be made without departing from the scope of the invention as defined by the following claims.

I claim:

1. In a system for processing the output signal of an alarm system to distinguish alarm conditions from spurious disturbances, oscillator means responsive to the alarm system output signal for producing a cyclical signal of predetermined frequency in the event of a predetermined condition in the alarm system output signal, means for counting the cycles of the signal produced by the oscillator means, means for resetting the means for counting to an initial level a predetermined time after the oscillator means is actuated, and means for providing an alarm signal when the number of cycles of predetermined frequency counted reaches a predetermined number.

2. The system of claim **1** wherein the means for counting comprises a digital counter.

3. In a method for processing the output signal of an alarm system to distinguish alarm conditions from spurious disturbances, the steps of actuating an oscillator to produce a cyclical signal of predetermined frequency in response to the alarm system output signal, counting the cycles of the signal produced by the oscillator, resetting the oscillator to an initial level a predetermined time after the oscillator is actuated, and delivering an alarm signal when the number of cycles counted reaches a predetermined number.

4. The method of claim **3** further including the step of resetting the counter to its initial level in response to the alarm signal.

* * * * *