M. J. GARLICK.

PAPER GUIDE FOR PRINTING PRESSES.

APPLICATION FILED MAR. 2, 1914.

1,159,011. Patented Nov. 2, 1915.

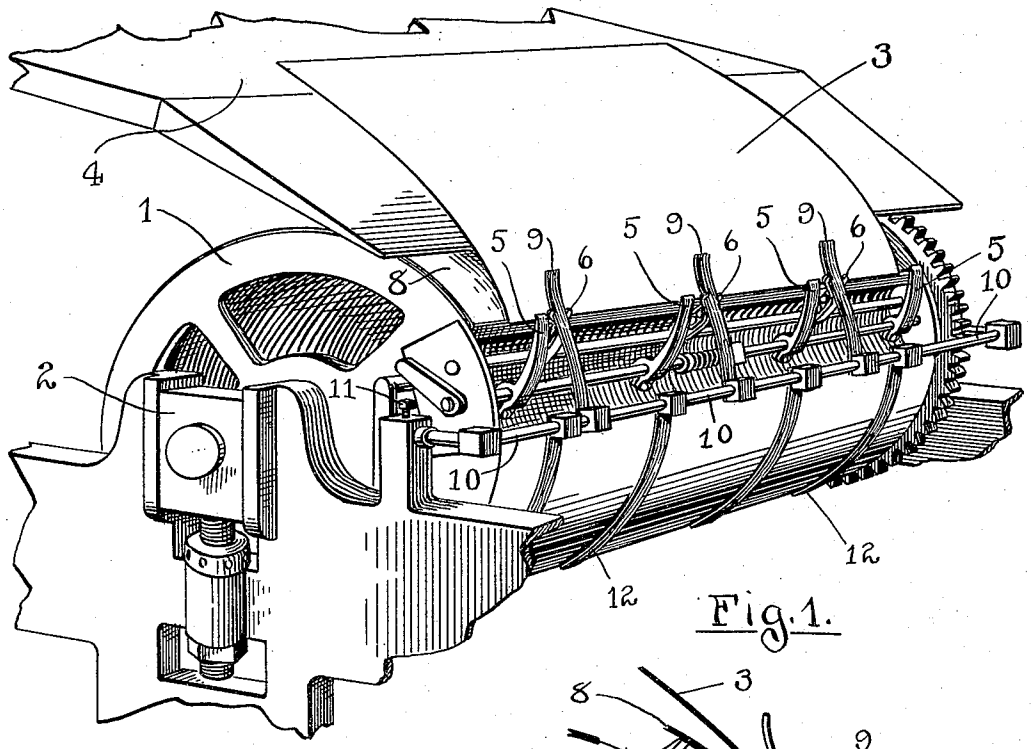

Fig. 1.

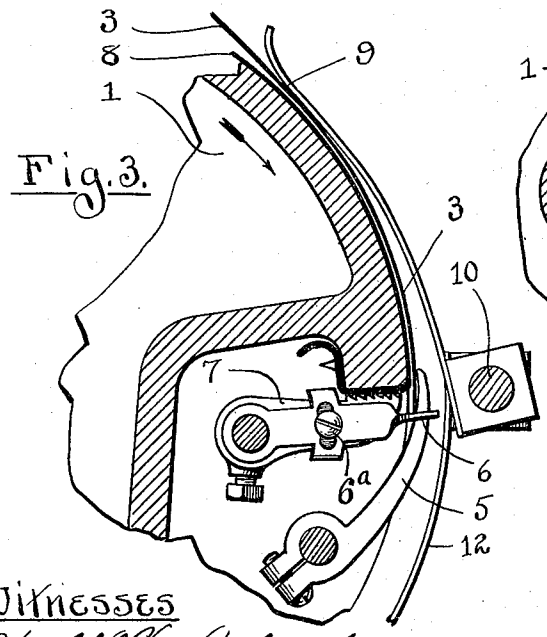

Fig. 3.

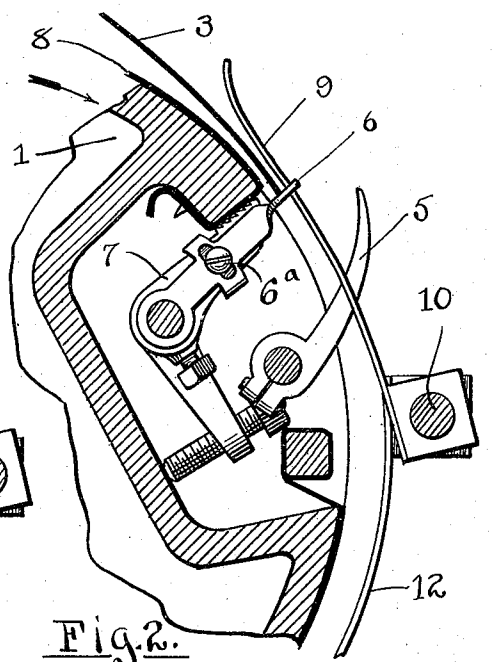

Fig. 2.

Witnesses

Harold O. Vanderburgh

Mae Rankin

Inventor

Mark J. Garlick.

By Luther V. Moulton

Attorney.

COLUMBIA PLANOGRAPH CO., WASHINGTON, D. C.

UNITED STATES PATENT OFFICE.

MARK J. GARLICK, OF DALLAS, TEXAS.

PAPER-GUIDE FOR PRINTING-PRESSES.

1,159,011. Specification of Letters Patent. Patented Nov. 2, 1915.

Application filed March 2, 1914. Serial No. 821,984.

To all whom it may concern:

Be it known that I, MARK J. GARLICK, a citizen of the United States of America, residing at Dallas, in the county of Dallas and State of Texas, have invented certain new and useful Improvements in Paper-Guides for Printing-Presses; and I do hereby declare the following to be a full, clear, and exact description of the invention, such as will enable others skilled in the art to which it appertains to make and use the same.

This invention relates to improvements in paper guides for printing presses, and more particularly to such guides for stop cylinder printing presses, in which the cylinder is intermittently rotated and remains stationary during a part of the operation of the machine, at which time the paper is fed to proper place relative to the cylinder, and the object of this invention is to provide guides which will properly locate the paper irrespective of the position of the same; to provide such guides of a simple substantial form, and to provide the device with various novel features as hereinafter more fully described and particularly pointed out in the claim.

It has been customary in printing presses to provide guides against which the edge of the paper is thrust to adjust it to proper position, and these guides have heretofore been attached to the frame of the machine. Consequently in stop cylinder machines, it has been necessary to provide means for stopping the cylinder accurately at a certain position relative to the guides so that each successive sheet of paper fed to the cylinder and adjusted by means of the guides, would be clamped upon the cylinder in exactly the same position. This accurate adjustment is especially required in connection with two color work, or such printing as requires more than one impression upon the same sheet of paper, where it is necessary to have the paper adjusted on the cylinder each time the impression is made, with extreme accuracy so that the succeeding impression will register exactly with the preceding one.

It has been found very difficult to construct mechanism which will, during the rapid operation of the machine, stop the cylinder each time in exactly the proper position relative to the guides, and consequently this type of a machine has heretofore been objectionable.

This invention is intended to provide a paper guide for stop cylinder presses, which will obviate the objectionable features above mentioned, and it consists essentially in providing stops fixed to the cylinder and movable therewith, so that in whatever position the cylinder stops, the paper fed to the guides thereon will always be accurately adjusted relative to the cylinder.

The device also embodies certain spring tongues fixed to the frame of the machine, which guide the paper to the stops on the cylinder, and which also engage the paper after the cylinder commences its rotation, and press the paper firmly thereto, stretching it smoothly over the surface thereof, and the device is provided with various other novel features of construction and arrangement, as will more fully appear by reference to the accompanying drawings, in which:—

Figure 1 is a perspective view of a portion of a printing press, showing the cylinder and paper guides embodying this invention applied in operative position thereto; Fig. 2 is an enlarged transverse section of a portion of the cylinder illustrating details of the invention, and showing the different parts in the position they assume when the cylinder is in stopped position; and Fig. 3 shows the same parts as Fig. 2 after the cylinder has commenced its rotation.

Like numbers refer to like parts in all of the figures.

1 represents the cylinder of a printing press of the stop cylinder type, the said cylinder being journaled in suitable bearings 2 in the frame and intermittently rotated by ordinary means (not shown). This cylinder is adapted to remain idle during that portion of the operation of the machine in which the bed carrying the type moves on its return or idle stroke, and it is during this time that the paper 3 is fed to the cylinder from the feeding board 4. At the beginning of the return or printing stroke of the bed, grippers 5 mounted on the cylinder, are released and permitted to engage the edge of the paper clamping it to the cylinder, which immediately begins to rotate and carries the paper upon its surface into contact with the type on the bed. These parts of the machine are all old and well-known and may be of any ordinary form.

To adjust the paper to the proper position on the cylinder, paper guides are pro-

vided which consist of the stop members 6 attached to the cylinder and projecting slightly beyond the peripheral surface thereof. These stops are preferably pivotally attached to certain clamping levers which serve to clamp the tympan or cylinder covering 8 to the cylinder and set screws 6ª are also provided which extend through slots in the stops and adjustably clamp them to the levers. This permits the projecting ends of the stops to be adjusted relative to the periphery of the cylinder whereby a more accurate adjustment of the paper may be obtained. The guides also comprise the guiding spring tongues 9, which are attached to a rod 10 extending parallel with the cylinder and detachably fixed to the frame of the machine. These spring tongues normally press against the surface of the cylinder, but are raised away from the said surface by the stops 6 as they pass under the tongues, and it is during that portion of the revolution of the cylinder in which the stops engage the tongues and raise them from the cylinder, that the said cylinder is stopped and remains idle. When the cylinder is idle, and the tongues 9 raised from the surface thereof, the paper 3 is fed to the cylinder, being guided by the tongues 9 and adjusted to the proper position by engagement with the stop 6. The grippers 5 are next released and the cylinder commences to rotate, carrying the paper with it, and as the stops 6 pass from beneath the spring tongues 9, the latter are released and allowed to engage the paper as shown in Fig. 3, pressing it firmly against the surface of the cylinder and stretching it evenly thereon so that it will not be wrinkled when it is engaged by the type. The rod 10, on which the tongues 9 are supported, is detachably connected to the frame of the machine by having its respective ends inserted in openings in the said frame and preferably retained therein by means of set screws 11. The arc-shaped fingers 12, which partially surround the cylinder to insure the retention of the paper in contact therewith until it is engaged by the type, are also supported upon the rod 10. When getting the press ready for operation, this rod 10 with the spring tongues 9 and retaining members 12 attached thereto, may be bodily removed from the machine so that the cylinder and parts thereon are readily accessible. This adds greatly to the convenience in making the machine ready for operation.

It will be understood that the use of this device is not necessarily limited to the so-called stop cylinder presses, but may be used on other cylinder presses as well, such for instance as a proof press where the cylinder is rotated manually and may be stopped at will at any point of its rotation.

What I claim is:—

In a printing press, a cylinder having a longitudinal recess in its periphery, a shaft located in said recess, members mounted on said shaft, stops mounted on said shaft alongside said members and extending outward beyond the periphery of the cylinder and having lateral alining projections intermediate their ends which extend beyond the edges of said members and slightly curved slots which extend across the stops and into said lateral projections, and screws secured to said members and extending through the slots of the respective stops to adjust the stops about the axis of the shaft.

In testimony whereof I affix my signature in presence of two witnesses.

MARK J. GARLICK.

Witnesses:
GEO. D. HALSELL,
J. J. DICKEY.

Copies of this patent may be obtained for five cents each, by addressing the "Commissioner of Patents, Washington, D. C."