July 22, 1952 J. A. FRISCHMANN 2,604,220

GRAB MECHANISM FOR INDUSTRIAL TRUCKS

Filed March 25, 1949 3 Sheets-Sheet 1

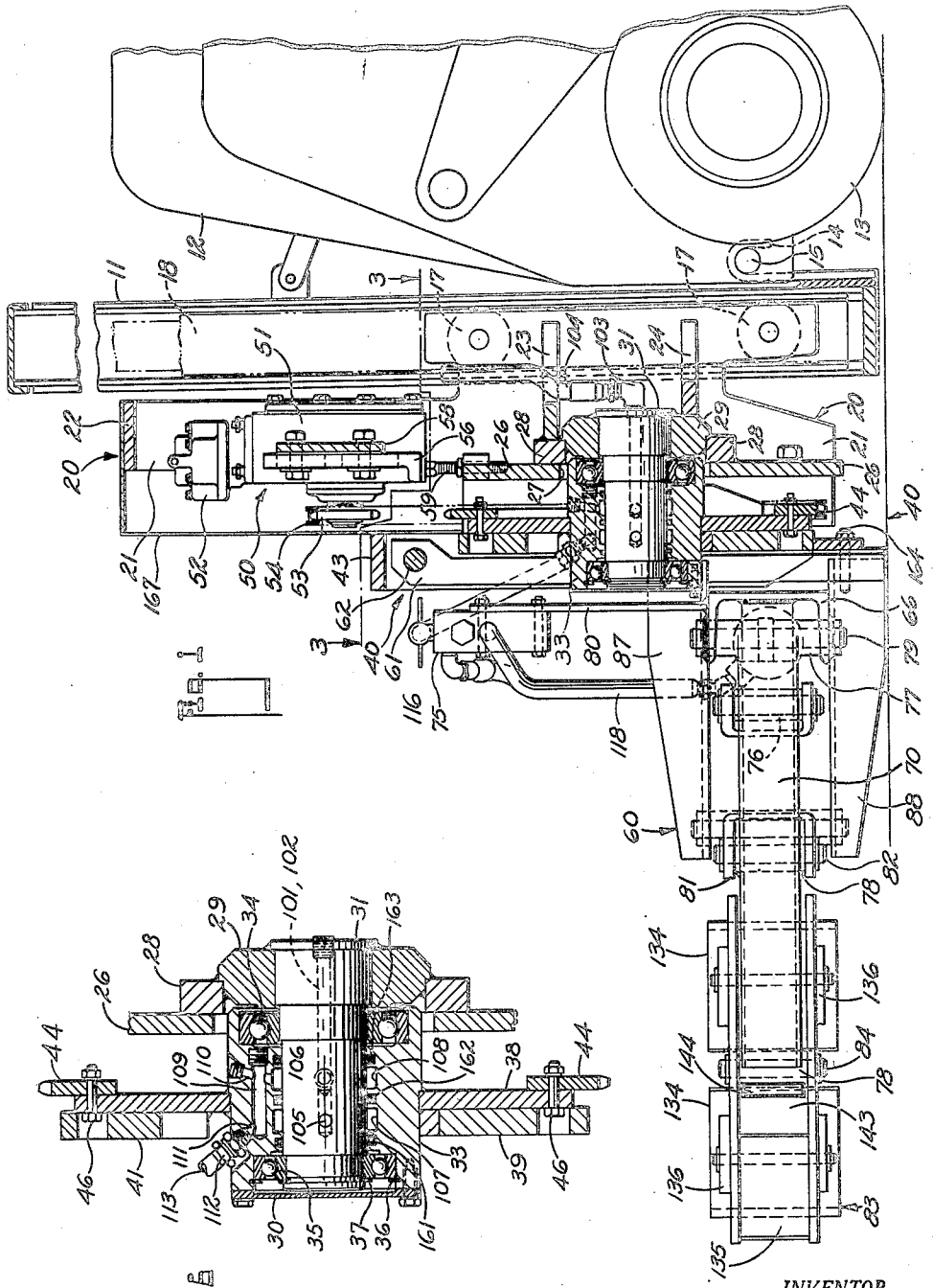

FIG. 1

FIG. 5

INVENTOR.
JOSEPH A. FRISCHMANN

BY Rischey & Watts

ATTORNEYS

July 22, 1952 J. A. FRISCHMANN 2,604,220

GRAB MECHANISM FOR INDUSTRIAL TRUCKS

Filed March 25, 1949 3 Sheets-Sheet 2

Fig 2

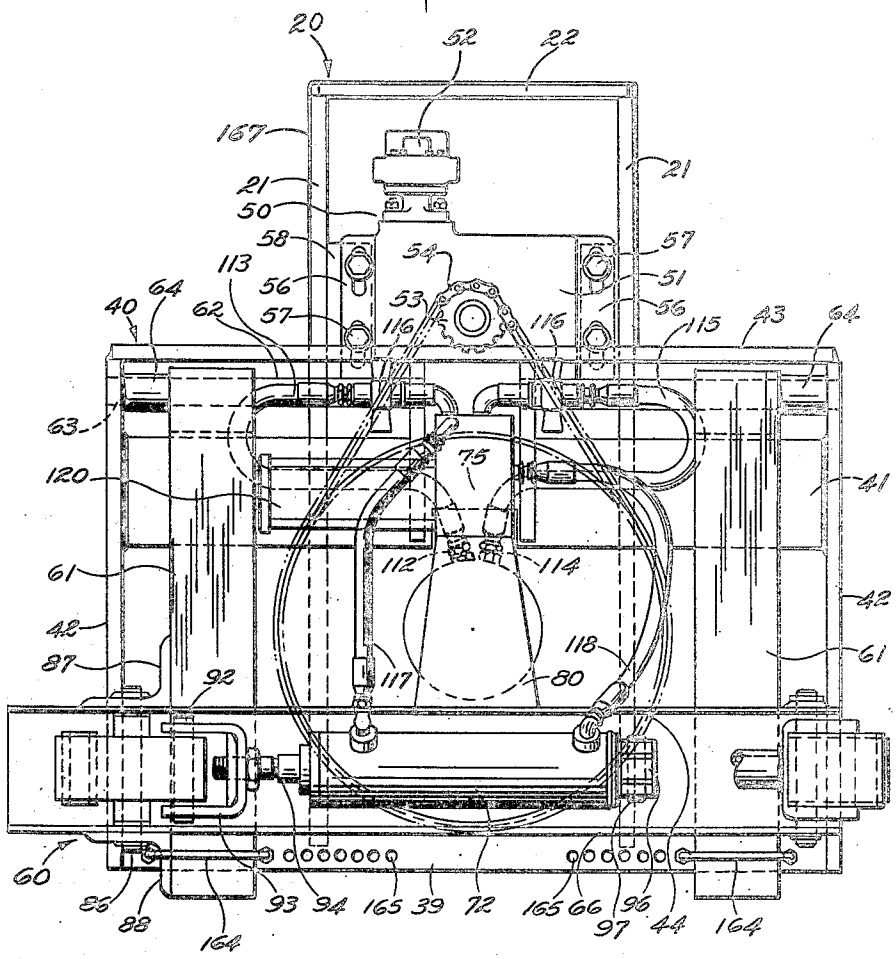

INVENTOR.
JOSEPH A. FRISCHMANN
BY Richey & Watts.
ATTORNEYS

July 22, 1952 J. A. FRISCHMANN 2,604,220

GRAB MECHANISM FOR INDUSTRIAL TRUCKS

Filed March 25, 1949 3 Sheets-Sheet 3

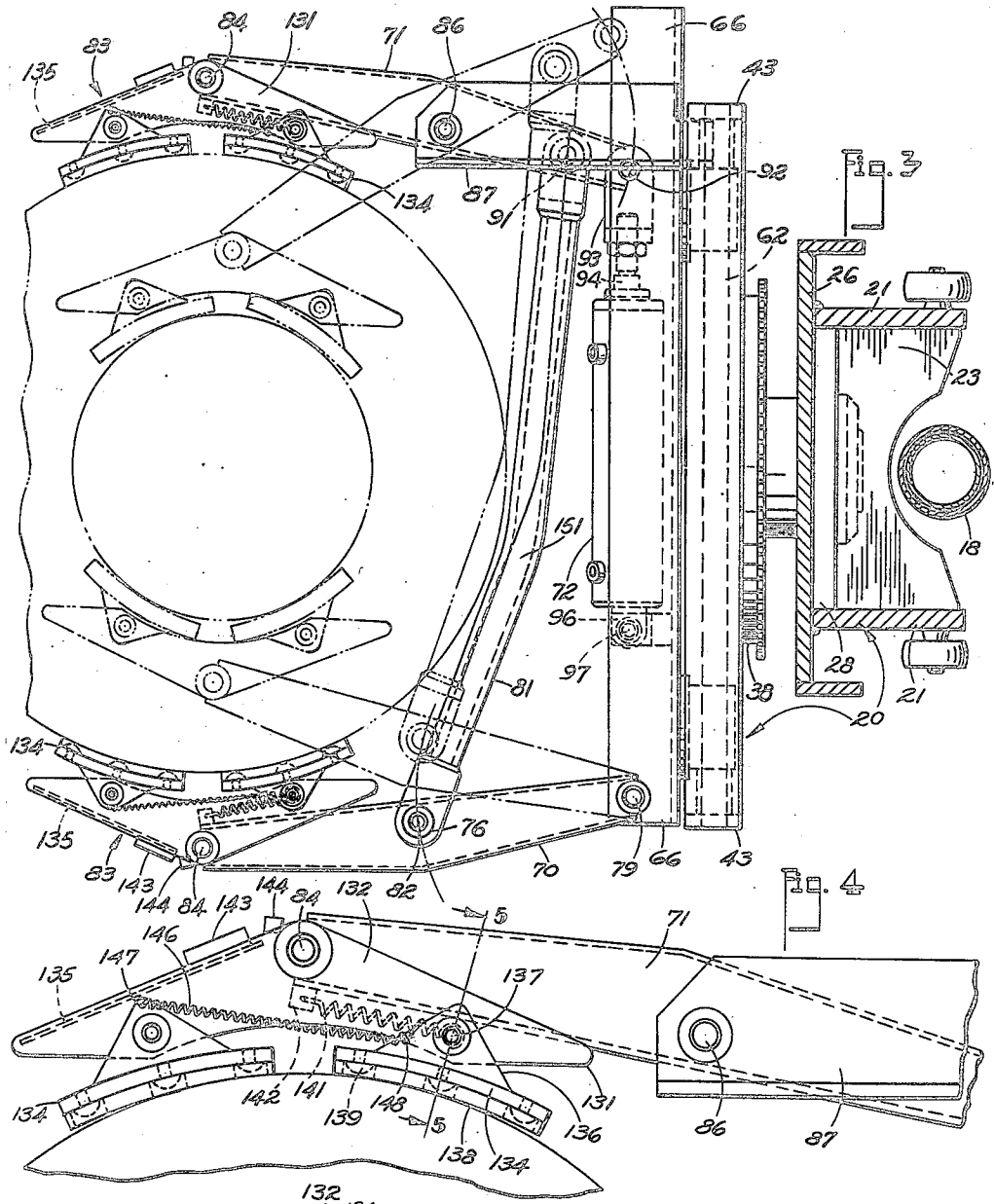

Fig. 3

Fig. 4

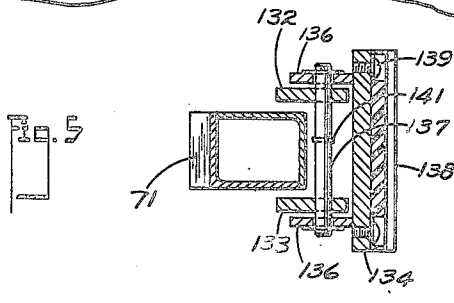

Fig. 5

INVENTOR.
JOSEPH A. FRISCHMANN
BY Richey & Watts.
ATTORNEYS

Patented July 22, 1952 2,604,220

UNITED STATES PATENT OFFICE

2,604,220

GRAB MECHANISM FOR INDUSTRIAL TRUCKS

Joseph A. Frischmann, Cleveland, Ohio, assignor to Towmotor Corporation, Cleveland, Ohio, a corporation of Ohio

Application March 25, 1949, Serial No. 83,488

3 Claims. (Cl. 214—115)

1

This invention relates to industrial lift trucks and is particularly directed to mechanism for improving the performance and extending the utility of such trucks in connection with the handling of drums, paper rolls, boxes, barrels, and other articles which may be gripped for lifting.

The most common manner of handling loads with lift trucks involves the utilization of pallets or skids which comprise, generally, a load-supporting platform mounted in spaced relation with the floor to accommodate the entry of the forks associated with the load-elevating mechanism. This system is not particularly well adapted to some types of loads and is obviously disadvantageous in loading freight cars or vans since, in such cases, the pallets must be forwarded with the merchandise, and must, therefore, be sacrificed or must be returned at considerable cost. Supporting the load by pallets is also unsuited to conditions in which it is desired to up-end or invert the load.

It has also been the practice to utilize a plate or blade organized for insertion beneath an article, such as a roll of paper, incident the elevation thereof. Such device, however, required the exercise of extreme care and skill of operation in order to avoid mutilation or damage to the load.

The present invention contemplates a pair of jaws arranged to seize, lift, and sustain a load during transportation thereof without the use of a pallet or platform of the character referred to above. The invention further contemplates mechanism for the rotation of the article being handled about a horizontal axis so that it may be up-ended, inverted, or laid on its side.

The preferred embodiment of the invention comprises a novel carriage adapted for use with a lift truck of conventional form by incorporating the improved gripping, rotating, and elevating structure therein. The invention further comprehends an improved gripping jaw and an improved hydraulic system for operating the jaws in all positions and under all conditions of rotation thereof. The improved gripping mechanism is particularly adapted for use with a rotatable carriage since the means for effecting the transmission of oil to the jaw-operating mechanisms does not limit or impede the rotation of the carriage.

Another feature of the invention resides in the provision of an improved roll-over mechanism.

A still further feature of the invention which

2

contributes to its successful operation of the machine resides in the incorporation of the improved grab arm mechanism which is designed to assure adequate surface contact with the load and is inherently adaptable to loads of various sizes and shapes.

Another advantageous feature of the invention resides in arranging the parts of the grab mechanism to accommodate the quick and easy removal of the arms so that the conventional forks may be readily installed, thus increasing the operative range and utility of the machine.

The invention also may incorporate an improved hydraulic system which is effective to maintain the gripping engagement of the grab arms with the object being lifted. These features of the hydraulic system are disclosed in my copending application Serial No. 60,726, filed November 18, 1948, now Pat. No. 2,596,895, entitled "Article Gripping System for Lift Trucks."

The principal object of the invention is to provide an improved article-handling system for lift trucks.

Subsidiary objects of the invention are to provide an improved grab mechanism and an improved roll-over mechanism.

The preferred manner in which the stated objects are achieved, as well as other objects of the invention more or less ancillary in nature, will be apparent to those skilled in the art from the description herein of the preferred embodiment of the invention.

Referring to the drawings:

Fig. 1 is a side elevation view, with certain parts in vertical section, of the carriage of the invention shown mounted on a fragmentary portion of a conventional lift truck;

Fig. 2 is a front elevation of the carriage with certain parts omitted;

Fig. 3 is a plan view of the carriage and grab arm mechanism with certain of the parts thereof shown in section;

Fig. 4 is an enlarged plan view of the outer portion of one of the grab arms;

Fig. 5 is a vertical section taken on the plane indicated in Fig. 4; and

Fig. 6 is an enlarged view in vertical longitudinal section of the carriage axis and associated mechanism.

The general structure of the invention is illustrated most clearly in Figs. 1 to 3, and in Fig. 1 the carriage is shown mounted on a generally vertical mast 11 which is supported on a lift truck comprising a body 12 and front wheels 13, the mast being supported by hooks 14 resting on

a cross frame member 15 of the truck. Inasmuch as this structure is well-known to those skilled in the art, it need not be described in further detail herein. The device comprises a non-rotating carriage assembly indicated generally as 20 fitted with rollers 17 which engage the inner walls of channel sections constituting the mast. The carriage is coupled by conventional means (not shown) to a hydraulic cylinder 18 by which it is raised and lowered on the mast.

In general, the carriage 20, hereinafter referred to as the "lift" carriage to distinguish it from the rotating carriage which is mounted thereon, comprises a rigid rectangular frame fabricated from appropriate plates and bars of structural steel. The parts of this assembly include a pair of side members 21 which extend rearwardly of the carriage to support the rollers 17 and are joined at the top of the carriage by a cross frame member 22. The upright side members 21 are united by two horizontal tie bars 23 and 24. A rectangular plate 26 formed with a central opening 27 extends across the front of the side members 21 and is welded thereto. Reinforcing bars 28 and a hub ring 29 are welded to the rearward face of the plate 26 concentric with the opening 27. The tie bars or cross members 23 and 24 are welded to the members 26, 28, and 29 to form a unitary and rigid assembly. The revolving carriage assembly indicated generally as 40 is supported on the lift carriage by a pin 31 (Figs. 1 and 6) which is machined for running clearance within the ring 29 and formed with a flange thereon which abuts the ring and is welded thereto for the retention thereof. As shown most clearly in Fig. 6, the revolving carriage comprises a cylindrical hub 33 which is rotatably mounted on the pin 31 through anti-friction bearings 34 and 35 disposed respectively in the inner and outer ends of the hub. The bearings 34 and 35 in the hub 33 are seated against shoulders in the pin in the customary manner, and the hub is retained on the pin by snap rings 36 and 37 seated respectively in grooves in the hub and pin. A cap 30 retained by cap screws closes the front of the hub 33.

A disk 38 is welded to the hub 33 and to a pair of cross members 39 and 41 of the rotary carriage. The vertical side rails 42 of the rotary carriage are welded to the cross members 39 and 41 and are also connected to an upper frame member 43. A sprocket 44 concentric with the hub is secured to the disk 38 by bolts 46.

The sprocket 44 is driven to rotate the carriage 40 on the pin 31 by a motor and gear box assembly, identified generally as 50, mounted on the elevating carriage. The motor and gear box are preferably similar to that disclosed in the application of William T. Wright for "Industrial Truck," Serial No. 705,444, filed October 24, 1946, now abandoned. The power drive assembly 50 comprises the gear box 51 with a continuously rotatable hydraulic motor 52 mounted thereon which may, for example, be of the gear type. The motor 52 is coupled by suitable reduction gearing (not shown) in the box 51 to a chain-drive sprocket 53 which is coupled to the sprocket 44 by by an endless chain 54. (Preferably, the motor 52 drives the sprocket 53 through irreversible gearing which may comprise a worm on the shaft of the motor 52 engaged with a worm wheel which drives the sprocket 53.) The gear box 51 is supported between the vertical frame members 21 by lateral flanges 56 having elongated openings therein for the reception of bolts 57 engaged in brackets 58 welded to the members 21. The vertical movement secured through this structure is provided to adjust the tension of the chain 54 in compensation for elongation thereof. The adjustment is maintained by jack screws 59 (Fig. 1) bearing against the lower surface of the gear case 51 and threaded into lugs in the upper surface of the plate 26.

The rotary carriage 40 is preferably constructed to accommodate the support of various load-carrying mechanisms; hence the grab mechanism 60 is mounted on hanger straps 61 supported by rods 62 which are retained in any suitable manner in bores 63 in the frame members 42. The grab mechanism is aligned transversely upon the carriage by spacer sleeves 64 on the rods 62. A channel iron 66 constituting a frame member for the grab mechanism is welded to the hangers 61 adjacent the lower ends thereof. The operative parts of the grab mechanism are supported on this channel and include two pivoted grab arms 70 and 71 (best shown in Fig. 3), a hydraulic cylinder 72 for actuation thereof, operating linkage between the cylinder and the arms, and a holding valve 75 (Figs. 1 and 2). The structure and function of the valve are described in detail in my copending application Serial No. 60,726 and now Patent No. 2,596,895 granted May 13, 1952. The arm 70 is preferably of rectangular transverse section and is provided with vertically disposed tubes 76, 77, and 78 constituting journal bearings for the arm and shoe assemblies. The pivot bearing 76 is mounted in the center of the arm and the bearings 77 and 78 are disposed adjacent the inner and outer ends thereof. The inner end of the arm is fulcrumed on a pin 79 supported in the journal 77 and in bosses welded to the upper and lower flanges of the channel 66. A tie rod 81 is coupled through a clevis to the central portion of the arm by a pin 82 and a grab shoe assembly 83 is coupled to the outer end of the arm by a pin 84.

The grab arm 71 is similar to the arm 70 but is provided with an additional bearing intermediate the center and inner sleeves. The arm is pivoted adjacent its center upon a pin 86 which is supported in a pair of spaced angle irons 87 and 88 fixed to the channel 66 and extending forwardly therefrom. A second grab shoe assembly 83 is pivoted upon the outer end of arm 71 by a pin 84 and the opposed end of the tie rod 81 is coupled through a clevis and pin 91 to the arm 71 adjacent the inner end thereof. A pin 92 in the inner end of the arm 71 is coupled for pivotal movement to the hydraulic cylinder 72. The pin 92 extends through a yoke 93 mounted for adjustment in the end of the piston rod 94 of the cylinder 72. The inner end of the cylinder 72 is formed with a trunnion 96 pivoted by the pin 97 in lugs welded to the channel member 66. As will be apparent, outward movement of the piston rod 94 will rotate the arm 71 and draw the grab shoe assembly 83 toward the medial axis of the truck, and the tie rod 81 will effect a like movement of the arm 70 as shown by dotted lines in Fig. 3. The proportions of the parts are such that the amount of movement of the outer ends of the two arms is substantially equal. Retraction of the piston rod 94 to open the grab arms 70 and 71 is effected by the introduction of pressure fluid into the opposite end of the cylinder.

Hydraulic fluid for actuation of the motor 52 and cylinder 72 may be supplied under the control of the operator through any conventional organization of hydraulic pumps and control valves

and the fluid may be conducted through flexible conduits from a reservoir supported on the frame of the lift truck to the carriage 20. It should be understood that the motor 52 and cylinder 72 are separately and independently controlled.

The two fluid lines to the cylinder 72 are coupled with the pin 31 and hub 33 of the revolving carriage as shown most clearly in Fig. 6. The pin is drilled from the inner end thereof to form two longitudinal passageways 101 and 102 which terminate adjacent the outer bearing. The inner ends of the drilled openings are tapped for the reception of pipe fittings 103 (Fig. 1) for connection of the flexible hose lines 104 communicating with the motor 52. The passages 101 and 102 are in fluid communication with a pair of radial passages 105 and 106 disposed in spaced relation with each other and extending to the outer surface of the pin for communication with annular grooves 107 and 108 in the bore of the hub 33. The grooves or passageways 107 and 108 are sealed by O-rings 161, 162, and 163. The hub is machined with a blind hole defining a passage 109 and a radial opening 110 communicating therewith and with the groove 108. The outer ends of the passage and opening 110 are tapped and plugged. The hub is further machined with a second radial opening communicating with the passage 109, the outer end of the opening being tapped to receive a fitting 112 for the connection of a flexible hose 113 communicating with the holding valve 75. The hub is further machined with a radial opening 11 therein which communicates with the hole. The passage 109 and openings 110 and 111 thus provide a fluid conduit between the groove 108 and the hose 113. In like manner the groove 107 is in fluid communication with an opening having a fitting 114 therein (Fig. 2) for the connection of a hose 115 communicating with the holding valve 75. These conduits, through which pressure fluid is supplied to the cylinder 72, are coupled to the holding valve 75 through conventional quick-detachable couplings 116. The holding valve 75 is coupled through flexible conduits 117 and 118 to the cylinder 72.

From the foregoing it will be apparent that the flexible hose lines 104 are in constant fluid communication with the cylinder 72 through the passages in the pin 31 and the hub 33, the hose 113 and 115 and the hose 117 and 118, and that this communication is maintained regardless of the movement of the rotary carriage.

The holding valve 75 includes an accumulator 120 (Fig. 2) which is supplied with oil when the piston cylinder assembly 72 is operated to close the grab arms 83. The oil in the accumulator is fed into the cylinder 72 to balance any escape of oil therefrom. In addition, the holding valve 75 includes a check valve mechanism to prevent leakage from the cylinder through the manual control valve on the truck. The valve 75 further includes mechanism for opening the check valve when the control valve is operated to open the grab arms. The holding valve is mounted on a plate or bracket 80 welded to the channel 66. In view of the full description of this hydraulic system in my aforesaid copending application, no further description thereof will be included herein.

The preferred load-engaging mechanism comprises a jaw mounted for pivotal movement on each arm, each jaw supporting two pivotally-mounted load-engaging pads illustrated in Figs. 1, 3, 4, and 5, but omitted from Fig. 2 in the interest of clarity. In detail, the pivot pins 84 on the arms 70 and 71 support a jaw 131 comprising upper and lower plates 132 and 133 united by a side plate 135. Each jaw is provided with two spaced load-engaging shoes, each of which comprises an arcuate plate 134 having a pair of spaced lugs 136 welded to the convex face thereof. The lugs straddle the plates 132 and 133 and are line-drilled therewith for the reception of pivot pins 137. Each shoe is provided with a compressible facing pad 138 of rubber or a similar material held in place by machine screws 139. As shown in Fig. 3, the articulated jaws and shoes facilitate the rocking movement of these members to accommodate the engagement thereof with articles of different size and/or irregular configuration. For example, as shown in Fig. 3, the device is adapted to grab, without marring, cylindrical objects having a ratio of about two to one in diameter.

In order to maintain the stability of the assemblies as the truck approaches the load, the jaws and shoes are equipped with springs acting impositively to retain the outer ends thereof in an open position; that is, to swing the leading ends of the jaws and shoes away from the medial axis of the truck. The jaw 132 is urged to its open position by a helical spring 141 secured in a block 142 on the grab arm and hooked around the pivot pin 137 for the inner shoe. Outward swinging movement of the jaw is restrained by engagement of a block 143 welded to the jaw and a block 144 welded to the side wall of the tube or sleeve 78.

The shoes are biased toward their open position by a spring 146 engaged in an opening 147 in the lug 136 of the outer shoe and in an opening 148 in the lug of the inner shoe. It will be noted that these openings are so located with respect to the axes of rotation of the shoes that the spring will urge the outer ends of the shoes outwardly. The springs are designed to afford sufficient tension to actuate the jaws and shoes but are too light to materially oppose the adjustment thereof.

The tie rod 81 is bent inwardly as indicated at 151 in Fig. 3 to provide a greater clearance between the arm and the jaws and thus accommodate loads of relatively large diameter.

As will be seen in Fig. 2, the lower ends of the hangers 61 are secured to the bottom cross rail 39 of the rotating carriage by U-bolts 164 mounted in holes 165 in the rail. Since the lift forks are customarily mounted on the hangers 61 in a similar manner, the cross rail 39 is drilled to provide a series of holes 165 disposed to accommodate the desired spacing of the forks.

When the forks are substituted for the grab arm mechanism, it is only necessary to remove bolts 164, withdraw the rods 62, and disconnect the couplings 116.

A sheet metal guard 167 (Fig. 1) may be provided on the upper portion of the carriage to enclose the chain sprockets for rotating the carriage.

When it is desired to transport a load, the jaws are opened by operation of the cylinder 72 and the truck is then advanced until the jaws are positioned in juxtaposition with the central portion of the opposed sides of the load. After the cylinder is energized to close the jaws, the load may be elevated in the customary manner by raising the carriage 20. The truck may then be moved to any desired point, and the load lowered to the floor or elevated to any desired level within the range of the machine. The holding device 75 maintains hydraulic pressure in the

cylinder 72 and insures the stability of the grip on the article being carried irrespective of vibrations resulting from movement of the truck, which ordinarily tend to loosen the grip of the clamping arms.

If it is desired to up-end the article the motor 52 may be energized to rotate the carriage to any desired extent. This feature of the machine may be utilized to invert the load or to dump containers holding scrap, waste, or raw materials. It is also possible to lay an article on its side or on a pallet, dock, or other elevated support. In this connection, it will be noted that the offset location of the jaws with respect to the center of rotation of the rotary carriage makes it possible to grab a roll or drum adjacent the base thereof, or, if desired, at a higher point if the carriage is inverted. Obviously, the point of engagement of the grab arm may also be altered by manipulation of the elevating mechanism for the carriage.

Although the foregoing description is necessarily of a detailed character, in order that the invention may be completely set forth, it is to be understood that the specific terminology is not intended to be restrictive or confining, and that various rearrangements of parts and modifications of detail may be resorted to without departing from the scope or spirit of the invention as herein claimed.

I claim:

1. In a lift truck, a mast, a carriage slidable along said mast, a frame mounted on said carriage for rotation about a horizontal axis, a cross rod detachably mounted across an upper part of said frame, spaced straps pivotally depending from said cross rod, a pair of clamp jaws, means mounting said jaws on said straps, and means to restrain said straps from pivotal motion about said cross rod.

2. In a lift truck, a mast, a carriage slidable along said mast, a frame, pin and journal means mounting said frame on said carriage for rotation about a horizontal axis, fluid passageways in said pin and journal means, a cross rod detachably mounted across an upper part of said frame, spaced straps pivotally depending from said cross rod, a pair of clamp jaws, means mounting said jaws on said straps, a piston and cylinder assembly for operating at least one of said jaws, means to restrain said straps from pivotal motion about said cross rod, and quick attachable hose connections between said pin and journal means and said cylinder.

3. A lift truck comprising a mast, a carriage elevatable on the mast, a frame mounted on the carriage for rotation about a generally horizontal axis, a bracket projecting forwardly from one side of said frame, a first clamp arm pivoted intermediate its end on said bracket, a second clamp arm pivoted adjacent its inner end at the other side of said frame, a tie rod pivoted to an inner end portion of said first arm and to an intermediate portion of said second arm, and a piston and cylinder assembly pivoted at one end to said frame and at the other end to the inner end of said first arm.

JOSEPH A. FRISCHMANN.

REFERENCES CITED

The following references are of record in the file of this patent:

UNITED STATES PATENTS

Number	Name	Date
1,563,505	Lough	Dec. 1, 1925
1,807,360	Wehr	May 26, 1931
1,878,994	Abbe	Sept. 27, 1932
2,075,819	Manly	Apr. 6, 1937
2,280,754	Flesch	Apr. 21, 1942
2,457,366	Guerin	Dec. 28, 1948
2,462,926	Wilson et al.	Mar. 1, 1949
2,468,326	Gleason	Apr. 26, 1949
2,475,367	Avery	July 5, 1949
2,497,118	Ferrario et al.	Feb. 14, 1950
2,522,128	Lehmann	Sept. 12, 1950