June 10, 1941. W. B. EDDY 2,245,265

DISPENSING DEVICE

Filed April 8, 1940

Fig. 1

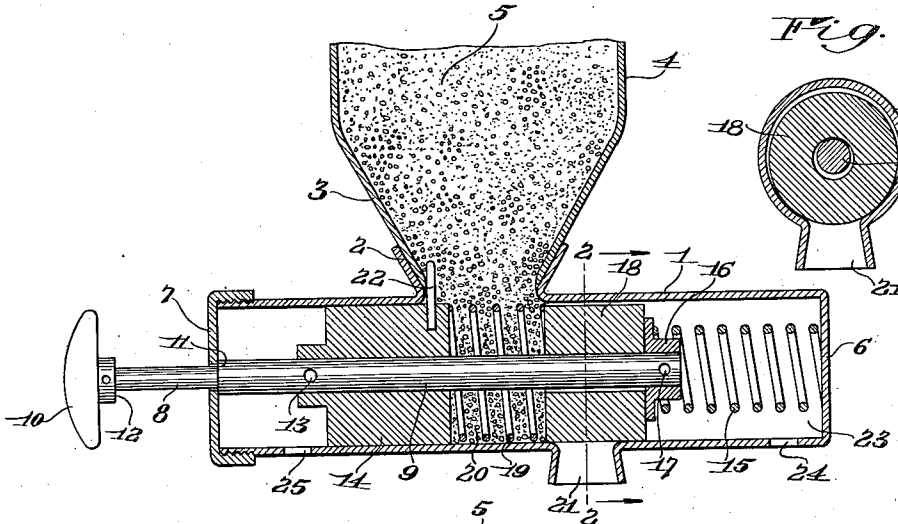

Fig. 2

Fig. 3

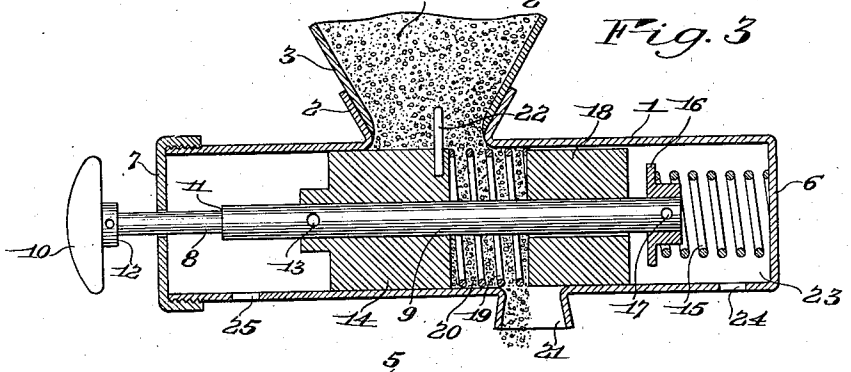

Fig. 4

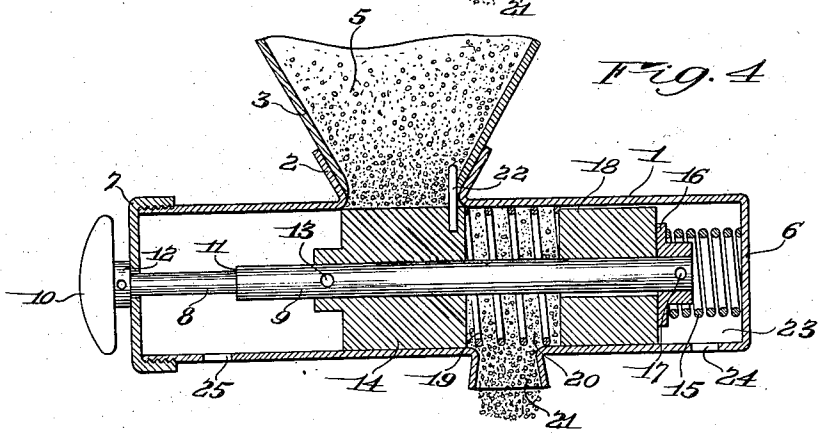

INVENTOR.
Willard B. Eddy

BY Russell B. Griffith
his ATTORNEY.

Patented June 10, 1941

2,245,265

UNITED STATES PATENT OFFICE

2,245,265

DISPENSING DEVICE

Willard B. Eddy, Rochester, N. Y., assignor to Rochester Germicide Company, Rochester, N. Y., a corporation of New York

Application April 8, 1940, Serial No. 328,486

1 Claim. (Cl. 221—104)

My present invention relates in general to dispensing devices of a nature in which the operator engages in a pre-arranged manual movement and thereupon receives a limited amount of a prescribed bulk article, and the invention has for its object to provide a simple and inexpensive device through the use of which in public places or otherwise a limited charge of granulated soap particles may be delivered to a user in a way that will give such user satisfaction in the use of the device and at the same time conserve the sure delivery of such soap in reasonable amounts upon each of a series of repeated efforts. The improvements are directed in part toward the provision of a delivering means in an apparatus of this kind in which friable matter such as the said pulverized soap is placed in a dispenser by the selling or similar agent; the user strikes an operating member; a measured quantity of the granulated or friable soap is delivered to such user, and, in the general course of the operation and in the preparation of the device for a subsequent user, the dispensing means is kept so clear that, on each actution of the device there will be no such clogging as would lead to such subsequent user obtaining a less quantity, all through the provision of means whereby the friable soap or similar mass is continuously agitated to the point of delivery.

In general, in the exercise of my invention, there is provided a refillable hopper containing a dispensing body of a granular consistency; the operator by a manual effort automatically measures off a quantity of this through pressing a simple plunger, and, through the instrumentalities provided, the contents of the whole apparatus is meanwhile kept in such agitation that successive such manual operations insure the delivery of a prescribed amount of the granulated or similar article to be dispensed.

To these and other ends, the invention resides in certain improvements and combination of parts, all as will be hereinafter more fully described, the novel features being pointed out in the claim at the end of this specification.

In the drawing:

Figure 1 is a longitudinal central section through a granular soap dispensing device constructed in accordance with and illustrating one embodiment of my invention;

Figure 2 is a transverse section, taken on the line 2—2 of Figure 1;

Figure 3 is a view similar to Figure 1 with the parts in that operating position in which a charge of soap granules is beginning to be dispensed, and

Figure 4 is a further view similar to Figures 1 and 3 showing the ultimate action in such a discharging operation of the device.

Similar reference numerals throughout the several views indicate the same parts.

In the present application of the invention, as aforesaid and in accordance with the showing of the drawing, it is to be assumed that the seller in charge of the dispenser provides a constant supply of granulated soap, that is, small particles of soap in a pulverized or similar condition, in a hopper. The problem is further to have a pre-determined amount of this soap, with each actuation by the user, to be dispensed upon the hands for washing purposes, the contents of the dispenser to be renewed for successive users after each actuation.

To these ends I primarily provide a tubular fitting 1 that is thereby suitably fixed to a wall or support adjacent to a wash basin where the device would ordinarily be used. The said tubular fitting 1 has a neck 2 with which cooperates the lower conical or tapered end 3 of a hopper 4. The said hopper 4 contains the body of granular or similar dry soap particles 5. The lower restricted end of this hopper is sealed in or properly connected to the neck or throat 2 on the tube 1 in any desired manner.

The said tube 1, which is in reality a cylinder, is closed at its inner end 6 and at its outer end is also closed by a cap 7. Extending through the cap 7, so far as a reduced portion 8 is concerned, is a plunger 9 terminating in an exterior cap 10 that the operator manipulates. The said reduced portion 8 is comprised between a shoulder 11 that stops its outward movement to the normal position of Figure 1 and a shoulder 12 that stops its inward movement.

Fixed to the plunger 9 by a pin 13 at the forward end of its inner portion is a piston 14 fitting and operating within tube 1. Such piston 14, on the rearward movement of the plunger 9, is adapted to close off neck 2 and communicating tapered portion 3 of the hopper. However, a coil compression spring 15 is interposed between the rear end 6 of the tube or cylinder 1 and a cap or collar 16 fixed by a pin 17 to the rear end of the plunger or push rod 9. The function of this spring 15 is to hold the push rod 9 in the normal position of Figure 1 with the piston forwardly and clear of throat or neck 2 and with shoulder 11 against cap 7 so that the reduced

portion 8 carrying knob 10 projects forwardly as far as possible.

At the rear end, the push rod or plunger is encircled by another piston 18 which has a loose or sloppy fit within the tube or cylinder 1. It is not otherwise connected to plunger 9. Spring 15 bears against it only through the medium of cap or collar 16 which such piston abuts.

Between piston 14, fixed to plunger 9 and the floating piston 18, is a coil spring 19 inferior in strength to spring 15. This spring 19 normally holds (Figure 1) floating piston 18 as far away from fixed piston 14 as it can get thereby providing what I call a measuring chamber 20 in between. This measuring chamber is normally below and substantially in continuation of the neck or throat 2, communicating with the reduced end 3 of the granulated soap hopper 4 seated therein.

In the operation of the device the normal position of the parts is that of Figure 1 for the reasons described. Rearwardly of measuring chamber 20 is a discharge aperture or neck 21 in the bottom of the tube and cylinder 1 normally closed by floating piston 18. When the operator desires to obtain a prescribed quantity of granular soap 5 from hopper 4 he holds one hand under discharge aperture 21 and, through the knob 10 presses plunger 9 inwardly as far as it will go. Before this operation, measuring chamber 20 is, of course, filled from hopper 4 as shown in Figure 1. This body of granulated soap in such chamber hence travels rearwardly because spring 15 is being manually positively compressed. As a result, forward piston 14 fixed to the plunger 9, causes spring 19 to thrust floating piston 18 rearwardly also even though such piston is free on plunger 9, thereby holding such latter piston close against cap 16. Spring 15 becomes incompetent because it is being forcibly compressed by the manual movement of plunger 9 through knob 10 as shown in Figure 3. The result is that measuring chamber 20 is moved from the position of Figure 1 to that of Figure 3 and from thence to that of Figure 4 so that it leaves alinement with the hopper and takes up an alinement with the discharge neck or aperture 21. This permits its contents to be discharged through the latter aperture in a final manner as shown in Figure 4, floating piston 18 having uncovered the latter aperture and fixed piston 14 having closed the communication between the hopper 4 through neck or throat 2 with the tube or cylinder 1. The measured quantity of granular soap is thereby discharged upon the operator's waiting hand at 21.

When pressure on the knob 10 and plunger 9 is released, superior spring 15 effects a rearward movement from the position of Figure 4 to the normal position of Figure 1. In so doing it allows inferior spring 19, operating in the then evacuated measuring chamber 20, to expand again holding floating piston 18 against cap 16 in a maximum operation of the cylinder. In other words, the full capacity of measuring chamber 20 is restored and brought anew into register with the supply hopper while floating piston 18 again seals discharge opening 21.

The point of the operation of intermediate spring 19 is that by expanding and retracting in alternation it functions primarily as an agitator within measuring chamber 20 to prevent the trapped and shifting mass of granulated or friable soap particles from being so compressed in the measuring chamber that they will not readily discharge at the opening 21 and will not leave an empty space for a new charge of soap particles when chamber 20 again comes forwardly in line with the hopper neck. In other words, as shown in Figure 3, on the rearward movement, the soap particles in measuring chamber 20 are slightly compacted, necessarily, and interposed spring 19 is slightly compressed in the midst thereof. When, however, the position of Figure 4 is reached this spring 19 ultimately moves floating piston 18 as far rearwardly as it can go against the cap 16 and in so doing expands as far as possible in chamber 20 and stirs the granular soap contents thereof, causing the same to freely flow out through discharge opening 21.

In general, spring 19 is essentially an agitator. It is compressed on the rearward movement and expands on the forward movement. It does the latter thing gradually while measuring chamber 20 is over discharge opening 21 and when it returns it expands to give a full flow from the hopper into the measuring chamber.

The reason that I provide for the loose fit of floating piston 18 both upon plunger 9 and within the cylinder tube 1 is to prevent it from being fouled by the soap particles and to give it a properly responsive motion, on the theory explained, during the movement between the positions of Figures 1, 3 and 4.

The theory of this invention is generally concerned with agitating the granulated, friable or otherwise discrete particles of soap so that successive charges thereon will not interfere with each other and will successively appear in sufficient volume at the discharge aperture 21. In continuation of this thought I herein provide additional means for preventing the choking at points 2 and 3, namely the transfer from hopper 4 of content 5 to cylinder or tube 1. To aggravate the flow there established so that the contents 5 will inevitably fill measuring chamber 20 below I prefer to additionally provide a pin 22 on the forward end of piston 14 fixed to plunger 9. This pin 22 is upstanding in throat 2 and, as plunger 9 goes backward and forward traverses such throat. It hence keeps the content 5 of hopper 4 from so clogging in throat 3 and neck 2 so that a free flow therefrom is communicated to the said measuring chamber 20 within tube or cylinder 1. In other words, as plunger 9 goes back and forth, manipulating as before described the two pistons 14 and 18, this pin 22 is always active to stir the matter 5 in hopper 4 portion 3 thereof and neck 2 so that its gravitational fall into chamber 20 is complete.

With the rearward movement of floating piston 18 and its connected parts on an actuation of the device, it is obvious that air compression would ordinarily occur in the chamber 23 occupied by spring 15 at the rear of floating piston 18 thereby resisting, in a perhaps small way, the movements aforesaid. Therefore, I provide a vent 24 in tube 1 evacuating said chamber 23 so that this reaction is obviated. In addition this vent 24 permits the discharge of any soap particles entering chamber 23 because of the aforesaid sloppy fitting of floating piston 18 in the tube or cylinder 1.

Similarly, at the front end of tube or cylinder 1 a vent 25 is provided for the expression of air otherwise trapped between fixed piston 14 and the cap or head 7.

I claim as my invention:

In a dispensing device of the character described the combination with a hopper adapted to contain a friable mass, of a cylinder normally communicating therewith, a plunger in the cyl-

inder normally uncovering such communicating means but embodying a piston adapted to close the same when the plunger is operated, a second piston surrounding the plunger in spaced relation to the fixed piston to provide a measuring chamber, a relatively light agitating spring coiled within the said measuring chamber intermediate the pistons and a relatively stronger spring arranged to return the plunger to an initial position, the relative positions of the parts being such that a rearward movement of the fixed piston and the plunger first compresses the intermediate spring and thereby moves the floating piston, the said cylinder being provided with a discharge opening normally closed by the floating piston.

WILLARD B. EDDY.