May 4, 1954 C. F. ALSING ET AL 2,677,250

FREEZER OF THE TOP OPENING TYPE

Filed Aug. 21, 1952 4 Sheets-Sheet 1

Fig. 1

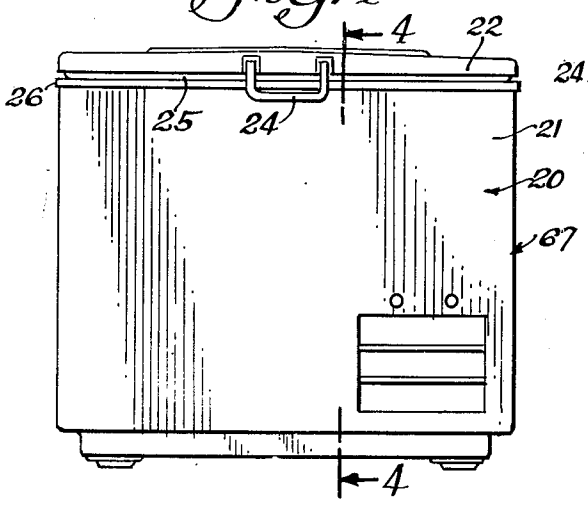

Fig. 2

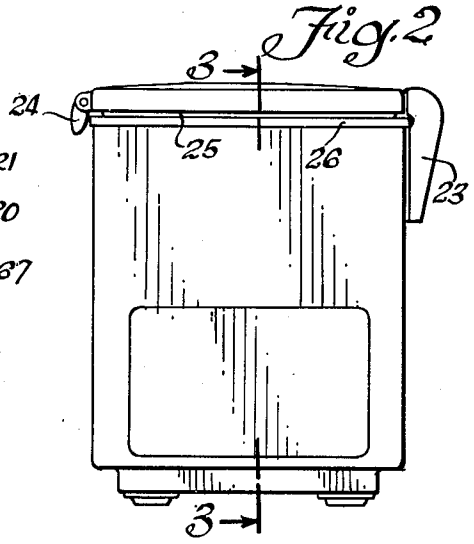

Fig. 3

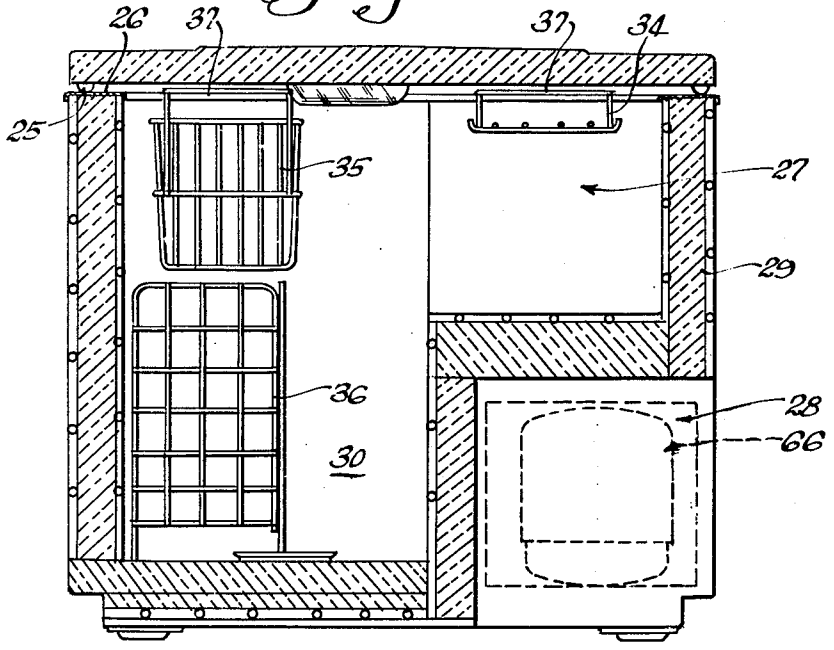

INVENTORS
Carl F. Alsing
Charles R. Dill
BY Robert H. Wendt
Attorney

May 4, 1954 C. F. ALSING ET AL 2,677,250

FREEZER OF THE TOP OPENING TYPE

Filed Aug. 21, 1952 4 Sheets-Sheet 2

Fig. 4

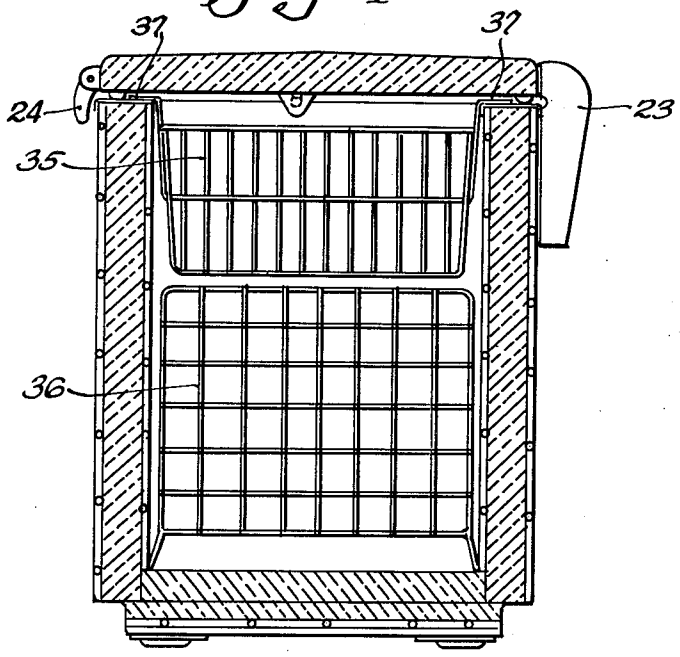

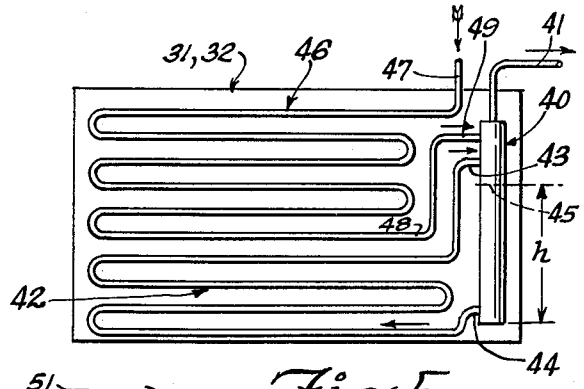

Fig. 5

Fig. 6

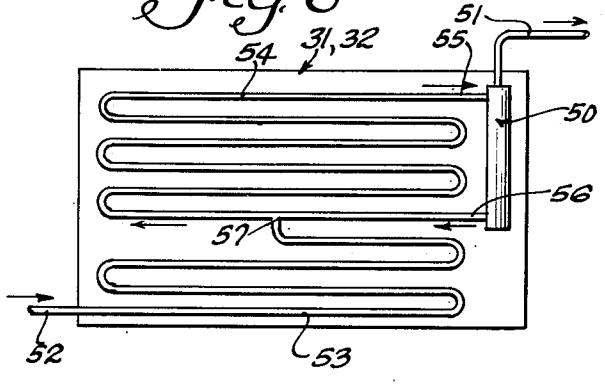

INVENTORS:
Carl F. Alsing
Charles R. Dill
BY
Robert H. Wendt
Attorney

May 4, 1954 C. F. ALSING ET AL 2,677,250

FREEZER OF THE TOP OPENING TYPE

Filed Aug. 21, 1952 4 Sheets-Sheet 3

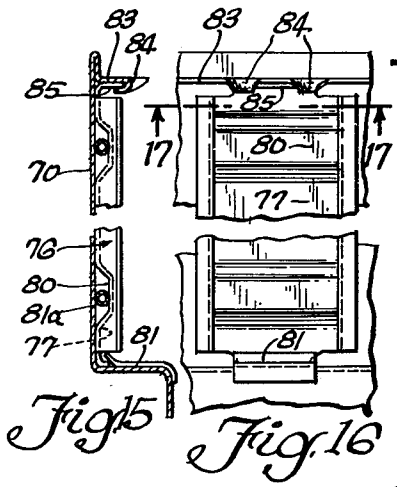

Fig. 15

Fig. 16

Fig. 7

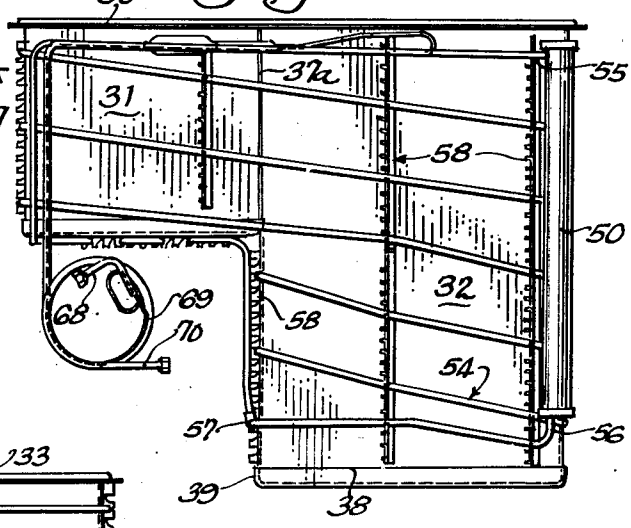

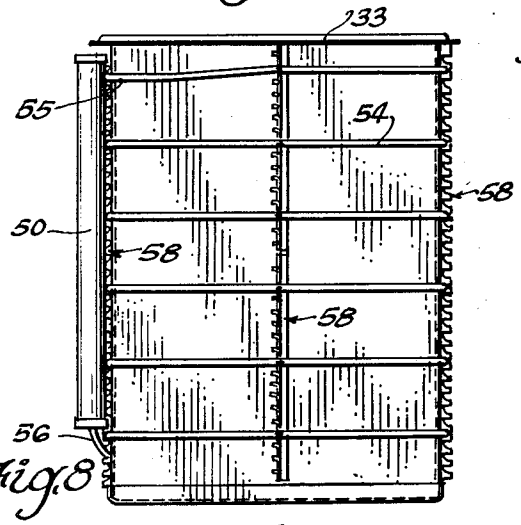

Fig. 8

Fig. 10

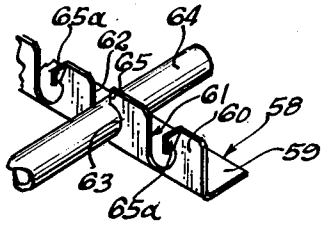

Fig. 9

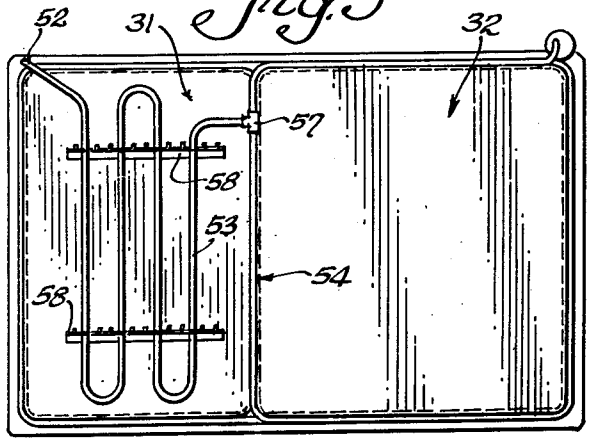

Fig. 17

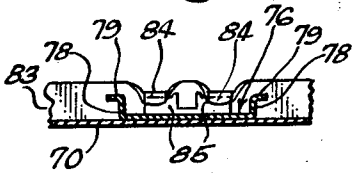

INVENTORS:
Carl F. Alsing
BY Charles R. Dill
Robert H. Wendt
Attorney

May 4, 1954 C. F. ALSING ET AL 2,677,250

FREEZER OF THE TOP OPENING TYPE

Filed Aug. 21, 1952 4 Sheets-Sheet 4

Fig. 11

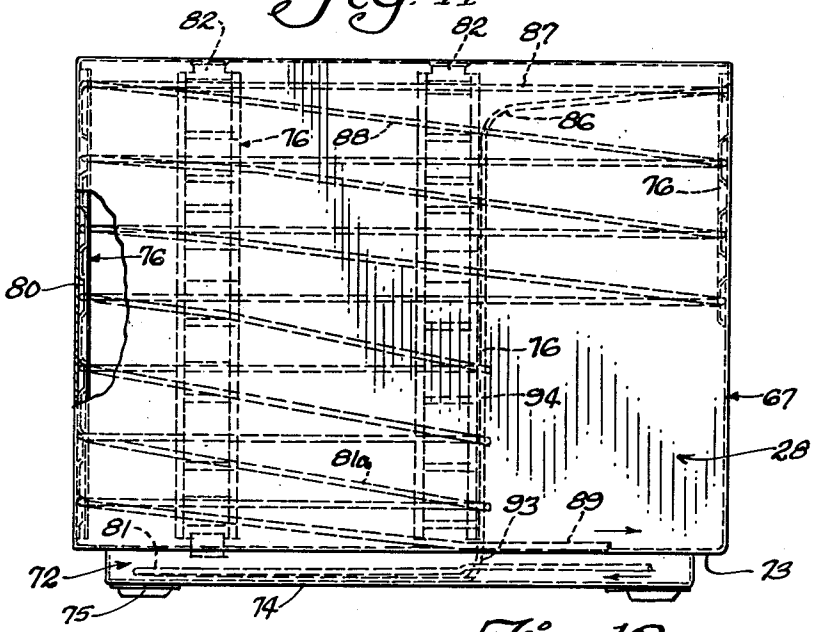

Fig. 12

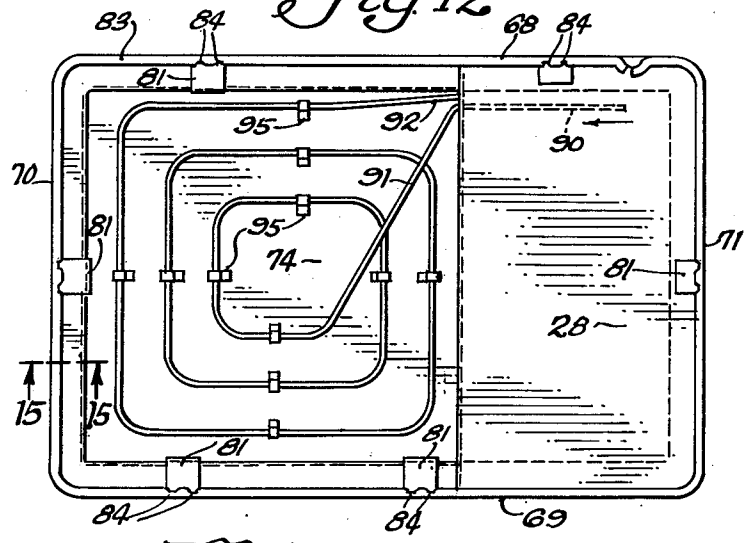

Fig. 13

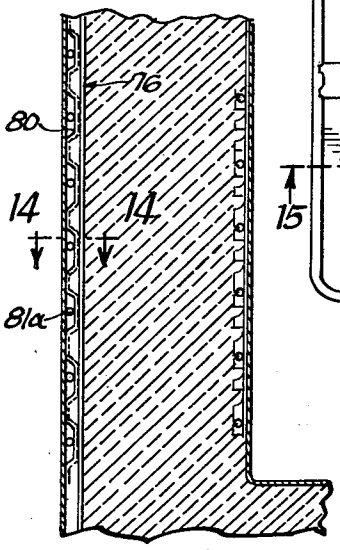

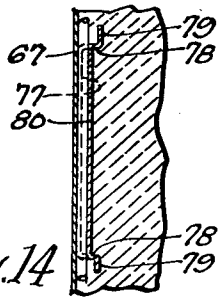

Fig. 14

INVENTORS:
Carl F. Alsing
BY Charles R. Dill
Robert H. Wendt
Attorney

Patented May 4, 1954 2,677,250

UNITED STATES PATENT OFFICE

2,677,250

FREEZER OF THE TOP OPENING TYPE

Carl F. Alsing and Charles R. Dill, Evansville, Ind., assignors to Seeger Refrigerator Company, St. Paul, Minn., a corporation of Minnesota

Application August 21, 1952, Serial No. 305,676

3 Claims. (Cl. 62—116)

1

The present invention relates to freezers of the top opening type, and is particularly concerned with the provision of an improved freezer of the flooded type, in which the outer shell may be utilized as a heat radiating surface for the condenser coils.

One of the objects of the invention is the provision of an improved freezer having semi-flooded evaporator coils for the purpose of providing a more efficient evaporator design, while still incorporating the wrapper coil method of fabrication.

Another object of the invention is the provision of an improved evaporator construction for open top freezers which may be provided with a greater charge of refrigerant in the system without the refrigerant slugging out at low ambient temperature operation.

Another object of the invention is the provision of an improved evaporator construction for open top freezers provided with a receiver which stores a variable head of refrigerant that is augmented during continuous operating conditions so that when the oil is cold at the beginning of the cycle the coils, which are connected to the receiver, may be flooded by hydrostatic pressure in the receiver tank. Thus there is sufficient refrigerant in the evaporator system so that it begins to load up the compressor at the beginning of the cycle of operation.

Another object of the invention is the provision of an improved semi-flooded evaporator system for open top freezers which is simple in construction, capable of economical manufacture, efficient in operation, and which produces a more uniform cooling effect throughout the entire wall area of the freezer.

Another object of the invention is the provision of an improved freezer system in which the condenser coils are secured on the inside of the outer shell of the freezer in such manner as to maintain the condenser coils in intimate heat contact with the outer shell and to utilize the outer shell as a heat radiating surface for the condenser coils, also eliminating any possibility of condensation on the outer shell.

Another object of the invention is the provision of improved modes of construction for securing the condenser coils to the inside surface of the outer shell, which involve a minimum amount of labor and materials.

Other objects and advantages of the invention will be apparent from the following description and the accompanying drawings, in which similar

2

characters of reference indicate similar parts throughout the several views.

Referring to the drawings, of which there are four sheets,

Fig. 1 is a side elevational view of a freezer of the open top type embodying the invention;

Fig. 2 is an end elevational view of the freezer;

Fig. 3 is a diagrammatic sectional view, taken on the plane of the line 3—3 of Fig. 2, showing the arrangement of the compartments within the freezer;

Fig. 4 is a similar diagrammatic sectional view, taken on the plane of the line 4—4 of Fig. 1;

Fig. 5 is a diagrammatic view of the evaporator system, showing the arrangement of the coils with respect to the header;

Fig. 6 is a similar diagrammatic view of a modification of the arrangement of the cooling coils;

Fig. 7 is a side elevational view of the liner of a freezer embodying the coil arrangements of Fig. 6 and shown with the coils secured to the outside of the liner;

Fig. 8 is an end elevational view of the liner and coils of Fig. 7;

Fig. 9 is a bottom plan view taken from the bottom of Fig. 7;

Fig. 10 is a view in perspective, showing the mode of securing the coils to the liner;

Fig. 11 is a side elevational view of the outer shell of the freezer, shown with its condenser coils and securing devises in dotted lines on the inside of said shell;

Fig. 12 is a top plan view of the outer shell of Fig. 11;

Fig. 13 is a fragmentary sectional view, taken through the wall of a freezer embodying the liner of Fig. 7 and the shell of Fig. 11, showing the details of construction;

Fig. 14 is a fragmentary sectional view, taken on the plane of the line 14—14 of Fig. 13, looking in the direction of the arrows, and showing the embossments in the vertical reinforcing members which secure the condenser tubes to the outer shell;

Fig. 15 is a vertical fragmentary sectional view of the outer liner taken on the plane of the line 15—15 of Fig. 12;

Fig. 16 is a right-hand inside elevational view of Fig. 15; and

Fig. 17 is a sectional view looking upward taken on the plane of the line 17—17 of Fig. 16.

Referring to Fig. 1, 20 indicates in its entirety a freezer of the open top type, in which the open top insulated cabinet 21 is provided with an in-

sulated cover 22 provided with suitable hinges and counter-balance springs 23 and a latch actuating handle 24. The cover is provided with the usual resilient, compressible rubber seal 25, which engages a combined breaker and finishing strip 26, covering the upper edges of the cabinet wall all around the top of the open type freezer.

The cabinet 21 is preferably formed with a smaller quick freezing compartment 27 located at the right end in Fig. 3 above a machine compartment 28, which is outside the insulation 29. The cabinet also has a relatively large frozen food storage compartment 30 extending from top to bottom at the other end; and the two compartments 27 and 30 are preferably formed by providing a smaller liner 31 (Fig. 7) of box-like shape open at the top, and a larger liner 32 of box-like shape open at the top, these two liners being side by side and having their top edges flush.

The liners are provided with an outwardly projecting flange 33 extending all around the top opening of the liners 31, 32 to provide a seat for the finishing strip and breaker 26.

The compartments 27 and 30 may be provided with any convenient form of wire racks 34 (Fig. 3), 35, 36, the first two being supported by laterally projecting supporting wires 37 engaging the top edge of the cabinet, and the latter one being supported by legs on the floor of the larger liner 32. The two liners 31, 32 are preferably separated at their point of contact 37*a* (Fig. 7) by a sheet of insulating paper for preventing noise through the metal to metal contact of the liners and aiding in establishing a slight differential in temperatures between the quick freeze compartment 27 and the frozen food compartment 30.

The two liners 31, 32 may each be formed of a rectangular sheet of steel bent to box-like form with the ends welded together and capped at the bottom by means of a sheet metal rectangular cap 38 having an upwardly extending border flange 39.

The liners 31, 32 may be provided with either of the coil arrangements shown diagrammatically in Figs. 5 and 6. In Fig. 5 the evaporator liner is indicated by a rectangle 31, 32 bearing certain coils and a vertical header or receiver 40.

The receiver 40 has its suction outlet conduit at 41 extending into the top of the receiver, where it is more likely to suck gaseous refrigerant from the receiver 40; and the receiver 40 is provided with a series of sinuous coils 42, which may be arranged sinuously or in the wrap-around arrangement on the liners 31, 42, which have both ends 43 and 44 in communication with the receiver 40.

The lower end 44 of these coils 42 communicates with the receiver 40 adjacent its bottom and is supplied with a supply of refrigerant in liquid form under a hydrostatic liquid pressure indicated by the letter "*h*" and shown by the refrigerant level 45 in the receiver 40.

The upper end 43 of the tubing 42 communicates with the receiver 40 above the level 45 of liquid and permits the gaseous refrigerant to pass into the receiver 40 as it bubbles up through the tubing 42, which preferably has a continuous upward slope toward the discharge end 43.

The evaporator of this freezer is preferably provided with another series of coils 46, which may be arranged sinuously or in the wrap-around manner, but also preferably have a continuous slope downward from the inlet 47 to the lowest point 48 in this system of coils 46, from which the outlet conduit 49 extends upward to carry gas to the top of the receiver 40.

The operation of this type of coil arrangement is such that the lower coils 42 will be flooded by the hydrostatic pressure in the receiver tank 40; and a head of liquid "*h*" is maintained under all operating conditions such that liquid refrigerant flows into the lower coils by gravity.

The refrigerant evaporated continues to float up through the tubing and returns to the upper section of the receiver tank. As soon as the compressor starts there is refrigerant in the evaporator system, which begins to load up the compressor, which in turn helps to increase the rate of warming up of the oil and pump parts, which assist the high side compressor in delivering refrigerant to the entering series coils 46.

These series coils 46 are refrigerated; and the excess refrigerant is delivered to the receiver tank after only traversing a portion of the space around the freezer. The result of this type of system is that both the lower and the upper parts of the refrigerator are refrigerated simultaneously; and the resulting suction pressure on the unit is maintained at a higher level during the refrigerating cycle. This results in a higher efficiency and lower kilowatt consumption for a given freezer temperature.

Referring now to Fig. 6, this shows diagrammatically a modification of the arrangement of the coils with respect to a rectangle 31, 32, indicating the two liners. In this type the freezer is provided with a vertical header or receiver 50, which has its suction take-off conduit 51 at the top.

The inlet to the coils is indicated at 52, leading to a series of sinuous or spirally wrapped coils 53, which are preferably arranged on the bottom of the quick freeze compartment liner 31. This gives the coils 53 at the bottom of the quick freeze compartment 27 a sufficient supply of refrigerant so that food placed in contact with the bottom of the liner 31 is quickly frozen.

The side walls of the two liners 31, 32 are covered sinuously or by the wrap-around method with a series of coils 54, which have both ends 55 and 56 communicating with the vertical receiver 50. The coils 54 have their inlet from coils 53 at the T joint 57; and the coils 54 discharge gas into the receiver 50 at the upper end 55, and may discharge a portion of liquid or gas through the tube 56 during portions of the cycle.

The first-mentioned series of coils 53 on the bottom of the quick freeze compartment communicate with the coils 54 at the point 57 by means of a T joint at a point spaced from the receiver 50. Thus the outlet 57 from the coils 53 serves to promote circulation upward through the coils 54.

In each of these cases the receiver 40 or 50 is, of course, several times the diameter of the tubing employed for the coils so that bubbles form in the refrigerant, and have the tendency to fill the tubing used for coils; but bubbles are much smaller than the space inside the receivers, where they rise in the liquid, which has a definite hydrostatic head.

The operation of this type of coil arrangement is more efficient than the continuous tube type of freezer coils, especially under low ambient conditions. By providing such a vertical header a greater charge of refrigerant may be used in the system without the refrigerant slugging out under low ambient operation.

Pressure in the header is equalized on the "Off" cycle by having both ends of the wrapper section 54 of the coils connected to the header. This allows the header and the evaporator coils 54 to become filled with liquid on the same level, on the "Off" cycle.

The joint 57 between the continuous section 53 and the flooded section 54 should be made at a low point of the system to assure a liquid seal and thus prevent any by-passing of the coils to be refrigerated.

Referring now to Figs. 7 to 9, these are views showing the two liners provided with coils according to the arrangement of Fig. 6. The two liners are preferably provided with a multiplicity of vertically extending coil securing strips 58, these being in the form of sheet metal angles of the type shown in Fig. 10.

The coil securing strips 58 have an attaching flange 59 which is welded to the side of the liner in substantially vertical position. These strips 58, are, of course, shorter on the shorter liner 31 of the quick freeze compartment; and in each case preferably run substantially from the top to the bottom of the liner.

Each coil securing strip 58 has an outwardly projecting coil supporting flange 60, which is provided with a plurality of regularly spaced inwardly extending slots 61, which have a straight edge 62 on one side and a circular edge 63, which engages about three-fourths of a tube 64, shown as an example. The tube securing flange 60 has a longitudinally extending retaining flange 65 curved on its lower side in Fig. 10 complementarily to the tube 64; but all of the retaining flanges 65 are bent laterally, as indicated at 65*a* in Fig. 10 to open the slots 61 for receiving the tube 64 and any of the other tubes of the system.

Thus the tubing may be wrapped tightly around the two assembled liners and placed in appropriate slots 61 of the securing devices 58 so that the tubing slopes continuously downward from its uppermost portions and so that the bubbles may travel upward in the tubing. After a tube is placed in the slot 61, the bent flange 65*a* of that slot is bent over to the position 65 to retain the tubing, as shown in Fig. 10.

Referring now to Figs. 7 and 8, these views show the header 50 of Fig. 6 and the coils 54 arranged in the wrap-around manner about the two liners 31 and 32 and communicating with the header 50 at the bottom, indicated at 56, and at the top, indicated at 55.

The header being thus connected to the tubing, it is supported on the liner by means of the tubing.

Referring now to Fig. 9, the section 53 of tubing of Fig. 6 is shown to extend from its inlet 52 to its outlet 57, which is a T-shaped connection to the coils 54 at a low point spaced from the entrance 56 of this tubing and from the receiver 50.

Similar securing metal strips 58 may extend across the bottom of the liner 31 for securing the coils 53, as shown in Fig. 9.

The motor compressor unit 66 of Fig. 3, is, of course, supported in the machine compartment outside the insulation 29, which is preferably arranged in rigid rectangular blocks, as shown in Fig. 3, filling the space between the liners and the outer shell 67, shown in Fig. 11. The connections to the condenser are shown in Fig. 7, where 68 indicates the inlet from the condenser to a capillary tube 69, which is coiled in heat conducting contact with a suction tube 70, extending to the upper part of the receiver 50 at 55.

Referring to Figs. 11–14, these are views showing the arrangement of the condenser coils on the inside of the outer shell of the freezer. The outer shell 67 comprises a rectangular metal box having two sides 68, 69 and two ends 70, 71 and provided with a bottom portion 72 of reduced size joined to the upper portion by an offset flange 73 and provided with a bottom panel 74.

The bottom 72 is provided with four rectangular stamped sheet metal pads 75 welded thereto and serving as feet; and these pads may be provided with the usual levelers.

The inside of the shell 67 is provided with a plurality of spaced channelled reinforcing members 76 extending vertically of the side and end walls and removably attached to the side and end walls. Each of the channelled reinforcing members 76 is of the construction shown in Fig. 14, having a body flange 77 which engages the wall of the shell 67 and having side flanges 78 joined to the laterally extending flanges 79.

The reinforcing members 76 are formed with embossed grooves 80 at regularly spaced points for receiving the condenser coils 81*a*, which are arranged on the inside of the shell and are held in tight heat conducting contact with the shell. The reinforcing members 76 are not welded to the shell wall, but are removably held at the top and the bottom by means of the brackets 81 at the bottom and the bendable flanges 82 at the top.

The shell is provided at its upper end with an inwardly projecting flange 83 extending all around the top of the shell and forming a seat for the breaker strip 26. This inwardly projecting flange 83 is deformed at two spaced points, as shown in Fig. 15 and Fig. 16 at 84 to extend downward behind backwardly turned end flanges 85 on the reinforcing members 76.

At their lower ends the brackets 81 are welded on the inside of the shell in such position as to confine the body 77 of the reinforcing member 76 between the bracket and the shell. Thus the reinforcing members 76 are held at the top and the bottom against the inside of the shell; and these reinforcing members hold the coils 81 of the condenser in tight engagement with the inside of the shell. The coils 81 are preferably arranged in a plurality of passes in a wrap-around manner, beginning at the point 86 (Fig. 11) and extending about the inside of the shell, with the first turn 87, and thereafter having diagonally extending portions 88 and equivalent horizontal portions extending about the whole volume of the shell on the inside.

At the lower part of the liner the coils 81 are arranged about the inside of that portion of the shell which surrounds the longer liner 32, ending at the bottom at a discharge conduit 89, which leads from the condenser to the capillary tube, and thence to the evaporator.

The inlet to the condenser is shown at 90 (Fig. 12) extending from the machines compartment 28 to the inside of the bottom panel 74 of the shell 67 at the longer liner.

Thereafter the condenser tube extends from 90 inward at 91 toward the center of the bottom panel and is arranged in rectangular, spiral formation until a plurality of turns brings the tubing 92 over near the side wall. It is bent upwardly at 93; and the vertical tube 94 communicates with the other turns of the condenser at 86.

Thus the compressed refrigerant enters the condenser at 90 and is first directed to the bottom of the shell, where it uses the bottom panel for a radiation surface. Thereafter the condensed re-

frigerant or partially condensed refrigerant is carried through a plurality of wrap-around turns of condenser tubing arranged on the inside of the outer shell, and terminating at the bottom.

The spiral turns 91, 92 of condenser tubing are secured to the bottom panel by a multiplicity of small metal brackets 95, each having one flange welded to the bottom panel and the other flange curving about the tube.

In addition to the metallic securing devices for the condenser tubing and the evaporator tubing, the tubing is preferably covered with a layer of heat conducting mastic intimately engaging the liner or the shell, as the case may be; and this mastic may contain aluminum fillings, which aid in conducting the heat from the tubing to the shell and from the liner to the tubing.

The present freezer construction utilizes a minimum amount of steel because it uses the outer shell as the radiating surface for the condenser. It permits the use of a greater charge of refrigerant which accumulates in the header and the flooded coils, and produces a more efficient distribution of the refrigerating effect in a more efficient manner.

While we have illustrated a preferred embodiment of our invention, many modifications may be made without departing from the spirit of the invention, and we do not wish to be limited to the precise details of construction set forth, but desire to avail ourselves of all changes within the scope of the appended claims.

Having thus described our invention, what we claim as new and desire to secure by Letters Patent of the United States, is:

1. In an open top freezer, the combination of a pair of inner metal liners of rectangular box-formation open at the top and of the same width but of different height, said liners being joined together at two adjacent sides, in heat-conducting relation with each other, and with the top edges flush with each other to form a liner assembly, the shorter liner forming a quick freeze compartment with space below it for a machine compartment, and the longer liner forming a food storage compartment, an outer metal shell of complementary form spaced from the liner assembly on all sides and bottom and insulated from the liner assembly by blocks of insulation, an insulating cover closing said open top, a breaker strip connecting the top of the liner assembly and the shell about the open top, a motor compressor in said machine compartment, a condenser coil carried on the inside of said shell in heat-conducting relation with the shell and connected to the compressor outlet, a capillary tube connected to the condenser and extending to an evaporator coil, said evaporator coil having a bottom portion in heat-conducting relation with the bottom of said shorter liner and extending downward on the longer liner; and being wrapped about said longer liner and proceeding upwardly and being wrapped about both said liners and proceeding upwardly to he top of the liner assembly, a vertically extending cylindrical receiver of substantially larger size than said evaporator coil carried by said longer liner and extending vertically on said longer liner, said wrapped liner coil having its lower end connected to the bottom portion of said receiver and having its upper end connected to the upper portion of said receiver, a suction tube from the top end of said receiver to the compressor inlet, and said bottom coil on said shorter liner having a T-connection to said wrapped coil adjacent the lower end thereof but spaced from said receiver, and a charge of refrigerant in said receiver extending well up in the receiver above said short liner bottom coil to flood said latter coils and cool the evaporator quickly and thoroughly on starting of the motor compressor.

2. In an open top freezer, the combination of a pair of inner metal liners of rectangular box-formation open at the top and of the same width but of different height, said liners being joined together at two adjacent sides, in heat-conducting relation with each other, and with the top edges flush with each other to form a liner assembly, the shorter liner forming a quick freeze compartment with space below it for a machine compartment, and the longer liner forming a food storage compartment, an outer metal shell of complementary form spaced from the liner assembly on all sides and bottom and insulated from the liner assembly by blocks of insulation, an insulating cover closing said open top, a breaker strip connecting the top of the liner assembly and the shell about the open top, a motor compressor in said machine compartment, a condenser coil carried on the inside of said shell in heat-conducting relation with the shell and connected to the compressor outlet, a capillary tube connected to the condenser and extending to an evaporator coil, said evaporator coil having a bottom portion in heat-conducting relation with the bottom of said shorter liner and extending downward on the longer liner; and being wrapped about said longer liner and proceeding upwardly and being wrapped about both said liners and proceeding upwardly to the top of the liner assembly, a vertically extending cylindrical receiver of substantially larger size than said evaporator coil carried by said longer liner and extending vertically on said longer liner, said wrapped liner coil having its lower end connected to the bottom portion of said receiver and having its upper end connected to the upper portion of said receiver, a suction tube from the top end of said receiver to the compressor inlet, and said bottom coil on said shorter liner having a T-connection to said wrapped coil adjacent the lower end thereof but spaced from said receiver, and a charge of refrigerant in said receiver extending well up in the receiver above said short liner bottom coil to flood said latter coils and cool the evaporator quickly and thoroughly on starting of the motor compressor, the said liner assembly being provided with a plurality of vertically extending angular members having one flange welded to its sides and the other flange provided with partially circular grooves close to the liner for receiving the coils, said grooves being blocked by an integral tab extending outside the coils but bendable in the direction of the coils to admit the coils into said grooves.

3. In an open top freezer, the combination of a pair of inner metal liners of rectangular box-formation open at the top and of the same width but of different height, said liners being joined together at two adjacent sides, in heat-conducting relation with each other, and with the top edges flush with each other to form a liner assembly, the shorter liner forming a quick freeze compartment with space below it for a machine compartment, and the longer liner forming a food storage compartment, an outer metal shell of complementary form spaced from the liner assembly on all sides and bottom and insulated from the liner assembly by blocks of insulation, an insulating cover closing said open top, a

breaker strip connecting the top of the liner assembly and the shell about the open top, a motor compressor in said machine compartment, a condenser coil carried on the inside of said shell in heat-conducting relation with the shell and connected to the compressor outlet, a capillary tube connected to the condenser and extending to an evaporator coil, said evaporator coil being wrapped about said liner assembly and engaging the bottom of the shorter liner and having both of its ends connected to the ends of a vertical receiver, said condenser coil starting at the top of said shell and extending around inside the shell in one continuous coil from top to bottom with a spiral portion inside the bottom of said longer shell, said coil being held in heat-exchange engagement with the shell by channeled, vertical frame members inwardly open, and having outer transverse embossed grooves for receiving said condenser coil turns, said channeled members being unattached to the shell except at the top and the bottom ends thereof, said members having an inwardly turned retaining flange at the bottom

engaged under an outwardly extending bracket attached to said shell, and said shell having its upper edge formed with a U-bend on itself and with an inwardly extending flange deformed downwardly and outwardly at spaced points engaging below and inside the edge of an inwardly extending top flange on each channeled member, a charge of refrigerant in said vertical receiver extending well up into the receiver above the bottom evaporator coils of the shorter liner to flood the coils which are below the refrigerator level in the receiver and cool the evaporator quickly upon starting of the motor compressor.

References Cited in the file of this patent

UNITED STATES PATENTS

Number	Name	Date
2,172,129	Phillip	Sept. 5, 1939
2,302,051	Phillip	Nov. 17, 1942
2,446,686	Behrens	Aug. 10, 1948
2,599,733	Whitmore	June 10, 1952