Feb. 17, 1925. 1,526,695

R. S. CLARKE

GROUP DESIGNATOR DEVICE FOR DISPATCH CARRIERS

Filed Nov. 15, 1921

FIG. 1

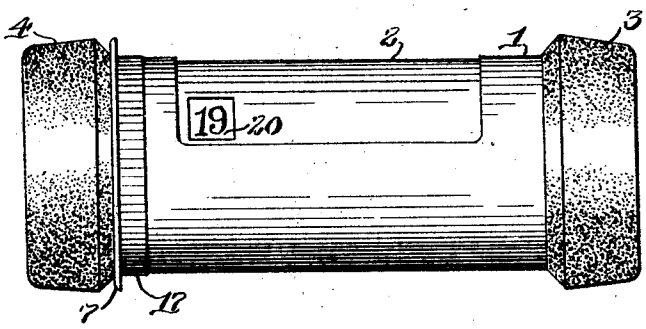


FIG. 3

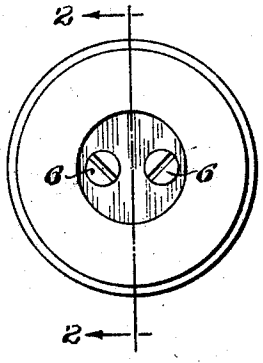


FIG. 2

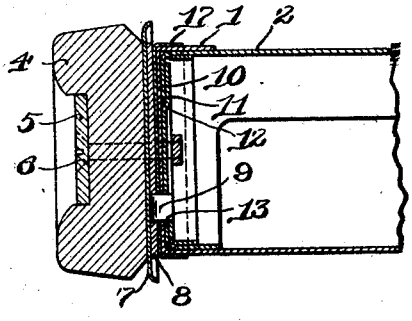


FIG. 5

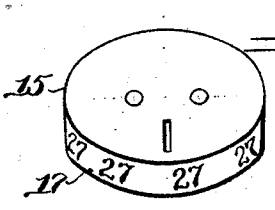


FIG. 4

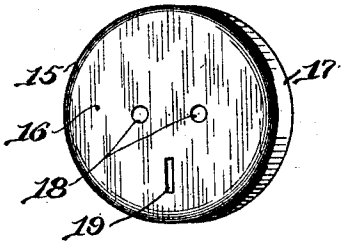


Inventor
Ralph S. Clarke,
By Roberts Robertson & Coleman
his attys.

Patented Feb. 17, 1925. 1,526,695

# UNITED STATES PATENT OFFICE.

RALPH S. CLARKE, OF BOSTON, MASSACHUSETTS, ASSIGNOR, BY MESNE ASSIGNMENTS, TO THE LAMSON COMPANY, OF BOSTON, MASSACHUSETTS, A CORPORATION OF MASSACHUSETTS.

## GROUP-DESIGNATOR DEVICE FOR DISPATCH CARRIERS.

Application filed November 15, 1921. Serial No. 515,284.

*To all whom it may concern:*

Be it known that I, RALPH S. CLARKE, a citizen of the United States of America, and resident of Dorchester, Boston, in the county of Suffolk and State of Massachusetts, have invented new and useful Improvements in Group-Designator Devices for Dispatch Carriers, of which the following is a specification.

This invention relates to means for readily distinguishing a carrier or a group of carriers from another carrier or group of carriers for purposes of rapid classification.

An improved modern practice in the handling of receipts and dispatches at the central station of the carrier dispatch service system divides the duties among different attendants so that the handling of received carriers and the dispatch of returned carriers respectively may be in charge of different persons. When one person can return all of the received carriers, it is not necessary to distinguish among the carriers further than to designate them by number, in familiar ways, in order that each carrier may be sent back to the station from which it was received.

When, however, the business of one central station is so large as to make it impractical for one person to return each carrier to the station from which it was received, it is desirable to indicate to which of two or more groups any carrier may belong, the said groups referring to carriers belonging to different groups or sections of the dispatch lines. For example, in a central station serving 250 separate dispatch lines it may be desirable to divide the duty of returning all of the carriers received among five operators, each responsible for the return of carriers to each group of fifty of the dispatch lines. Assuming that the operators returning the carriers must select, from a general mass of carriers traveling past or delivered in each of them, those belonging to their particular group of fifty lines, it will be obvious that speedy identification of a carrier and rapid service can not be maintained, if reliance for the selection is upon the usual label or number appearing on one part only of the carrier. Reliance upon numbers only puts too great a burden upon the eyesight and attention of the operator. Any reliance upon numbers alone, when the numbers rise to considerable whole quantities, such as 100 or more, is a source of delay in the primary selection of the carrier by the operator whose duty it is to return it.

This invention contemplates making a primary division into groups of all the carriers in the system by causing the carriers to present from any angle of view a different appearance for one group from that of each of the other groups, and by causing the carriers of any one group all to present the same appearance, except for a designating number or character showing to which line of the designated group the carrier belongs.

A principal object of the invention, therefore, is to provide means in connection with a dispatch carrier of usual construction which will distinguish that carrier from another similar carrier not belonging to its own group. A further object of the invention is to provide for this purpose means readily attached to and detached from carriers of usual construction and adapted to the purpose of designating a group to which the carrier belongs; and a further object of the invention is to provide means for this purpose which shall be light, durable, inexpensive, adapted to be protected from accidental destruction by the hard usage to which such carriers are subjected; and adapted if desired to serve also as a carrier for a number or other mark designating the particular dispatch line of a group to which the carrier belongs.

By way of one example only of the invention, I have shown forms particularly adapted to the familiar cash or credit-entry type of pneumatic carrier suitable for store-service pneumatic systems.

In the accompanying drawings,

Figure 1 is an elevation of the carrier equipped with the device of this invention;

Figure 2 is a longitudinal detail section on the line 2—2 of Fig. 3;

Figure 3 is an end elevation of the carrier shown in Fig. 1;

Figure 4 is a perspective view of a designator cap corresponding to a preferred form of the invention; and

Figure 5 is a perspective showing a modification.

Referring now to Figs. 1 and 2 a carrier

may comprise the usual mutually-rotatable telescoping tubular body sections 1 and 2, the tube 2 having rigidly attached thereto a head 3, and the tube 1 having rigidly attached thereto a head 4. According to the usual construction the head 4 is provided with a central outward depression in which a washer 5 is provided with diametrically placed countersunk bore-holes for screws 6, 6, which pass through the substance of the head 4, through a projecting packing 7 of flexible material and through an inner washer 8 having a struck-up lug 9. The screws 6 also extend through bores in the head 10 of the tube 1 and through bores in an inner bearing washer 11 adapted to turn within the circular opening 12 of the inner tube 2, which circular opening is of larger radius at 13, Fig. 2, through a sufficient arc of motion of the lug 9 to limit the rotative motions of the parts 1 and 2 in respect to each other, all as well known in the art.

The bearing for the end of the tube 2 in the described structure is between the head of the tube 1 and the washer 11.

For the purpose of the present device the relation of the tube 1 to the washer 8 is made use of to provide a readily detachable mounting for the designating device, of which the preferred form comprises a cup 15 comprising a head 16 and a cylindrical flange 17 adapted to fit snugly over the periphery of the outer tube 1. The cup 15 is provided with suitable openings at 18 for screws 6 and at 19 for the lug 9. When assembled as shown in Fig. 2 the head 16 is grasped firmly between the washer 8 and the head of the outer tube 1, and the flange 17 is exposed throughout the periphery of the tube. In this position the flange 17 is visible from any point of view no matter what the position of the carrier. The preferred material for the cup 15 and the flange 17 is a translucent celluloid or other durable colloid sheet pigmented in a vivid color, but I may employ a suitable paper or a suitable painted or enameled sheet-metal structure of the same form.

It will now readily be understood that the carriers belonging to an appropriate group of dispatch lines, for example, fifty tubes out of two hundred and fifty, will be provided with a cap 15 and flange 17 of one color, the other similar groups being provided with caps of appropriate different colors. In use, the dispatching operator is enabled without thought and without delay to select from delivered carriers, or carriers lying or passing in any and all positions in a mass, those which belong to the group designated by the color of the flange 17. This operator therefore makes a primary selection among the carriers by reason of the indications of the designator device, and having so selected the carrier in the right group dispatches this carrier by putting it in a tube bearing the same number or character constituting an individual designation on the carrier. In the preferred instance the carrier carries the number shown by 20 on a part of the tube 2.

In some cases I may employ the flange 17 of the group designator device 15 as the carrier also for the number or character designating the individual carrier, as shown in Fig. 5, which illustrates the flange 17 of the cup 15 as provided with the individual-carrier designating numeral 27 at intervals all around its periphery. The flange 17 still may be of a material of an individual color for the group to which carrier No. 27 belongs.

It will be observed that while the flange 17 constitutes an annulus exterior to the carrier proper, that its position in relation to head 4 and the air-stop packing flange 7 is such as securely to protect the flange 17 from contact with other carriers or receptacles in which the carriers may be placed. Accidental destruction of the group-designating device is prevented by this provision.

What I claim is:—

1. A designator device for pneumatic dispatch carriers consisting of a colored cup having a continuous cylindrical flange constructed and arranged to fit over the end of the tubular body portion of the carrier.

2. A designator device for a pneumatic dispatch carrier having a tubular body portion comprising a continuous ring of distinctive color encircling the body portion near one end, said ring having the same color throughout its entire extent, and means preventing relative movement of the body portion and ring constructed and arranged to expose substantially the entire surface of the ring to view.

3. A designator device for pneumatic dispatch carriers consisting of a cup of colored material having a bottom and a continuous annular flange, the bottom having an opening therein, said cup being constructed and arranged to fit across the end of the tubular body portion of the carrier and to be held against rotation relative to said body portion by engagement of one element of the carrier with the opening in the bottom of the cup.

4. A dispatch carrier for carrier dispatch systems comprising a tubular body member, a head secured to the end of the body member, the head being of a diameter greater than that of the body thereby providing a protective flange, and a continuous ring encircling and fixed relatively to the body member closely adjacent to the flange, the entire circumferential extent of the ring presenting a like and distinctive appearance visible in all positions of the carrier.

5. A dispatch carrier for carrier dispatch systems comprising relatively rotatable telescoping tubular body sections, a head secured to the end of one of said sections, a cup interposed between the head and the end of the body section to which it is secured, and means for preventing relative movement of the cup and head, the cup having a continuous annular flange overlying the circumferential surface of the outer body portion, said flange having a distinctive coloration discernible with substantially equal facility regardless of the position of the carrier.

6. A designator device for carriers consisting of a colored celluloid cup adapted to fit over the end of one part of the body of the carrier.

Signed by me at Boston, Massachusetts, this twelfth day of November, 1921.

RALPH S. CLARKE.