Oct. 27, 1936. J. CULEMEYER 2,058,955

APPLIANCE FOR THE TRANSPORT OF RAILWAY CARS ON STREETS

Filed Nov. 25, 1932 6 Sheets-Sheet 1

Fig. 1.

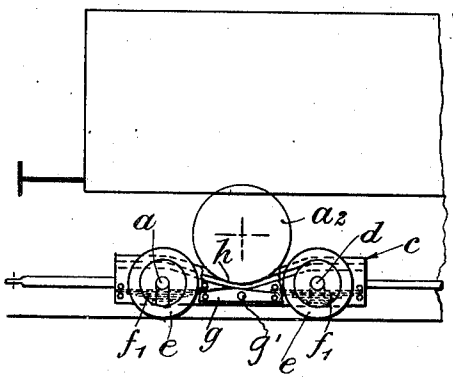

Fig. 1c

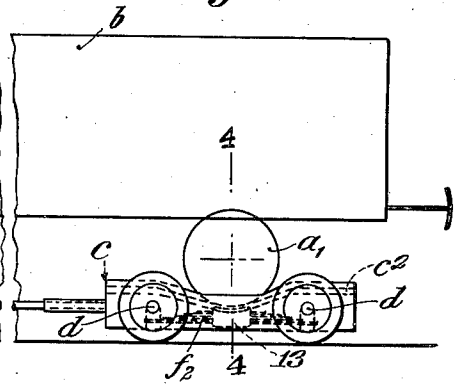

Fig. 2.

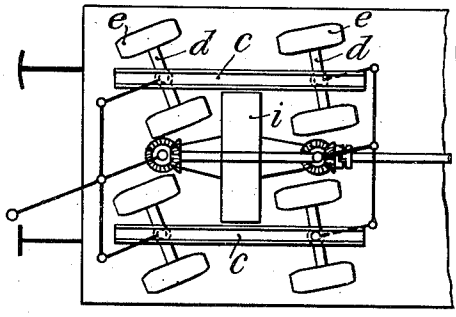

Fig. 2a.

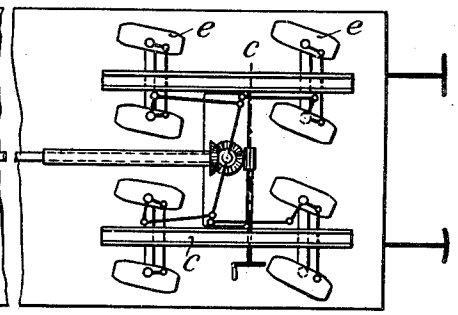

Fig. 3.

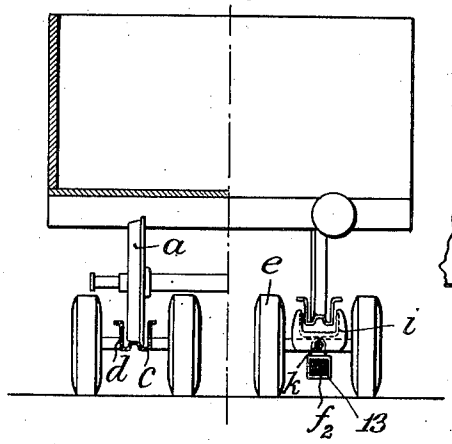

Fig. 4

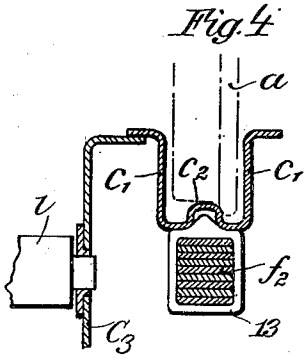

J. Culemeyer
INVENTOR

By: Marks & Clerk
ATTYS.

Oct. 27, 1936. J. CULEMEYER 2,058,955

APPLIANCE FOR THE TRANSPORT OF RAILWAY CARS ON STREETS

Filed Nov. 25, 1932 6 Sheets-Sheet 2

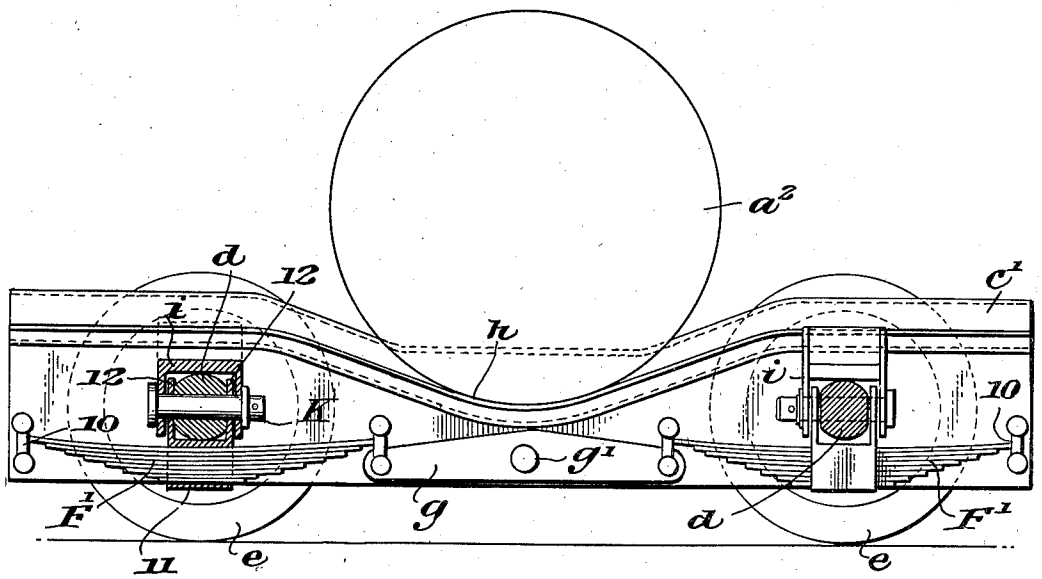

Fig. 1a

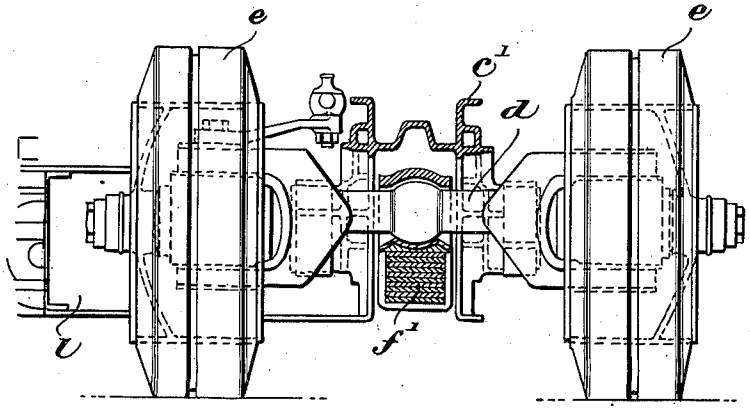

Fig. 1b

Inventor,
Johann Culemeyer
Glascock Downing & Seebold
By Attys.

Oct. 27, 1936. J. CULEMEYER 2,058,955

APPLIANCE FOR THE TRANSPORT OF RAILWAY CARS ON STREETS

Filed Nov. 25, 1932 6 Sheets-Sheet 3

Fig. 5.

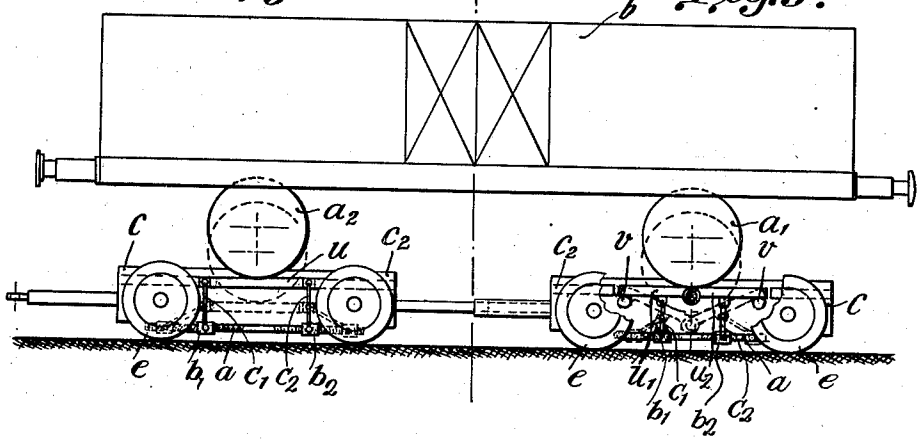

Fig. 5a

Fig. 6

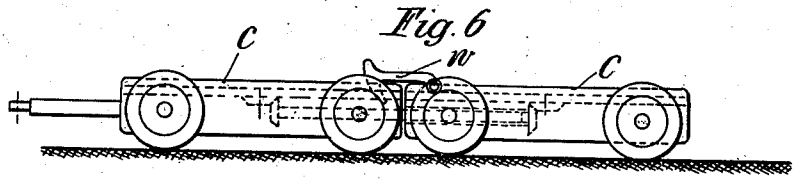

Fig. 7.

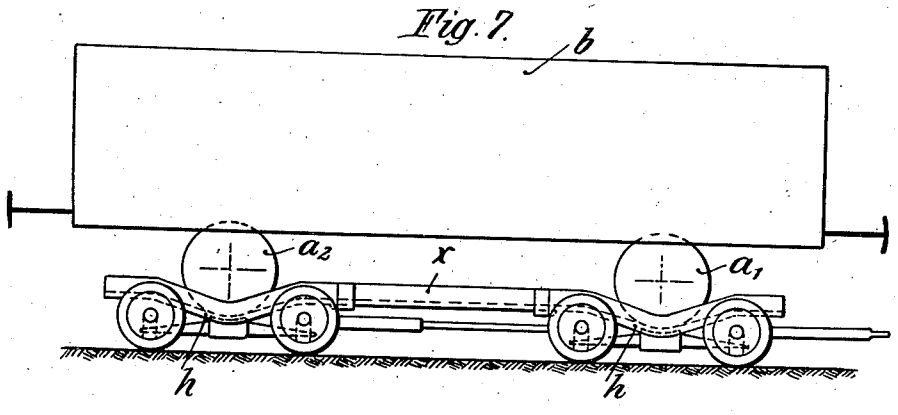

J. Culemeyer
INVENTOR

By: Marks & Clerk
Attys.

Oct. 27, 1936. J. CULEMEYER 2,058,955

APPLIANCE FOR THE TRANSPORT OF RAILWAY CARS ON STREETS

Filed Nov. 25, 1932 6 Sheets-Sheet 4

Fig. 8.

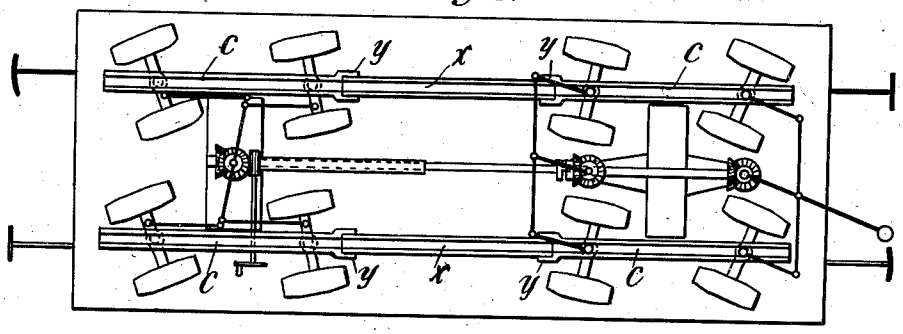

Fig. 9.

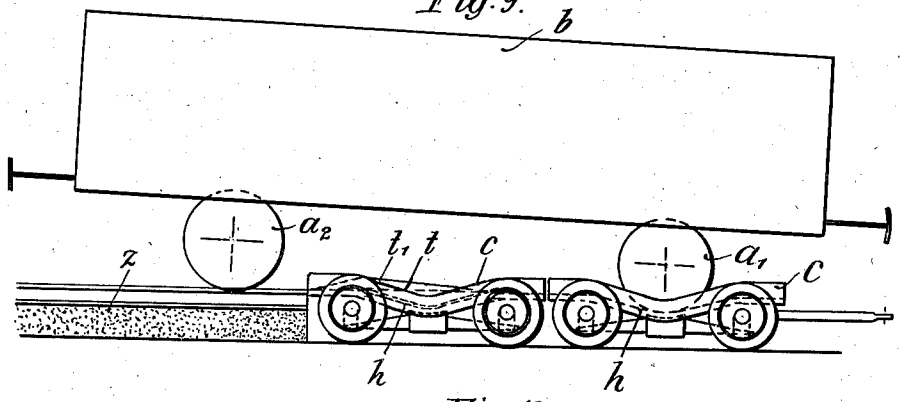

Fig. 10.

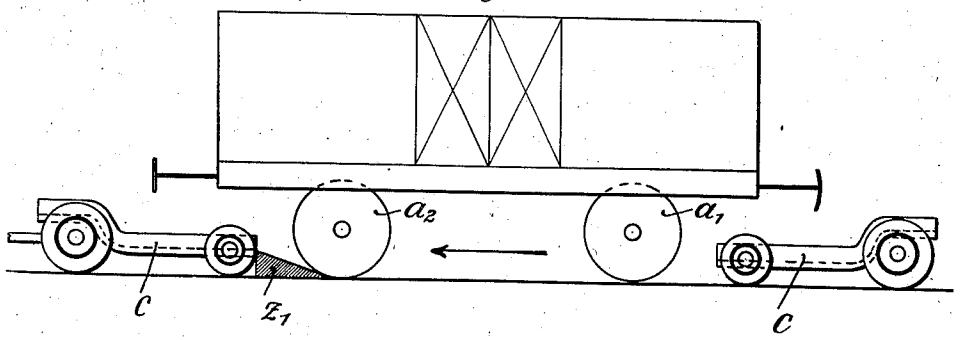

J. Culemeyer
INVENTOR

By: Marks & Clerk
Attys.

Oct. 27, 1936. J. CULEMEYER 2,058,955

APPLIANCE FOR THE TRANSPORT OF RAILWAY CARS ON STREETS

Filed Nov. 25, 1932. 6 Sheets-Sheet 5

Fig. 11.

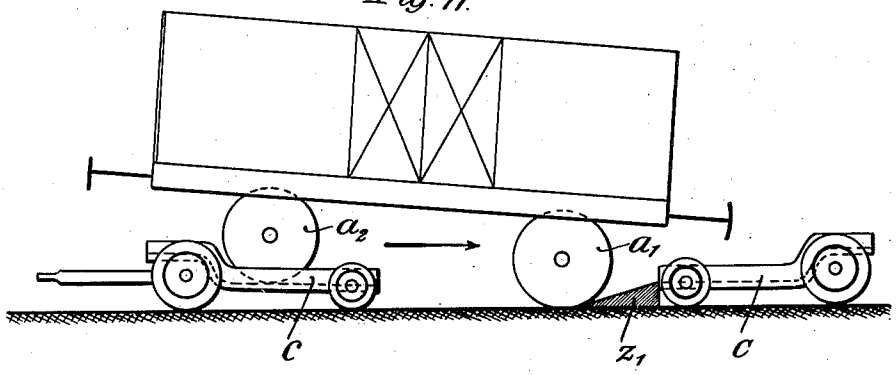

Fig. 12.

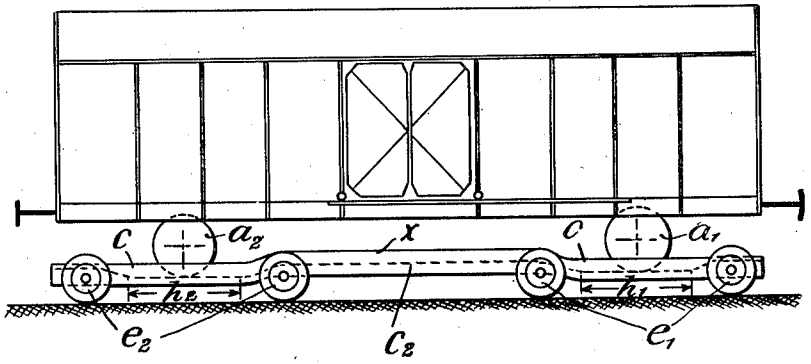

Fig. 13.

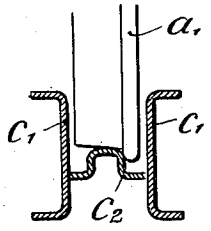

J. Culemeyer.
INVENTOR

By: Marks & Clerk
Attys.

Oct. 27, 1936. J. CULEMEYER 2,058,955

APPLIANCE FOR THE TRANSPORT OF RAILWAY CARS ON STREETS

Filed Nov. 25, 1932 6 Sheets-Sheet 6

Fig. 14.

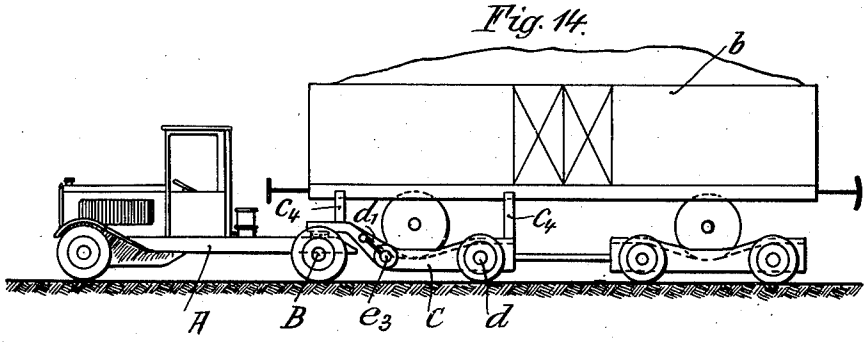

Fig. 15.

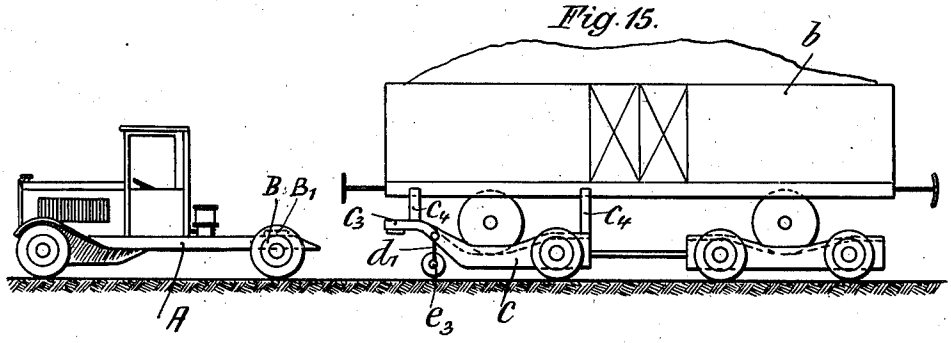

Fig. 16

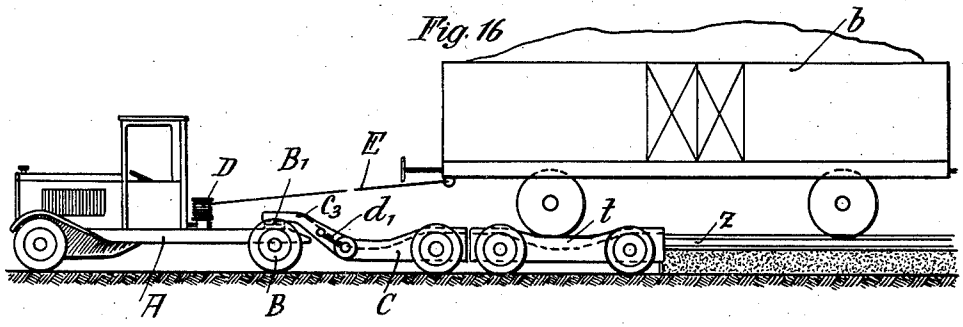

Fig. 17.

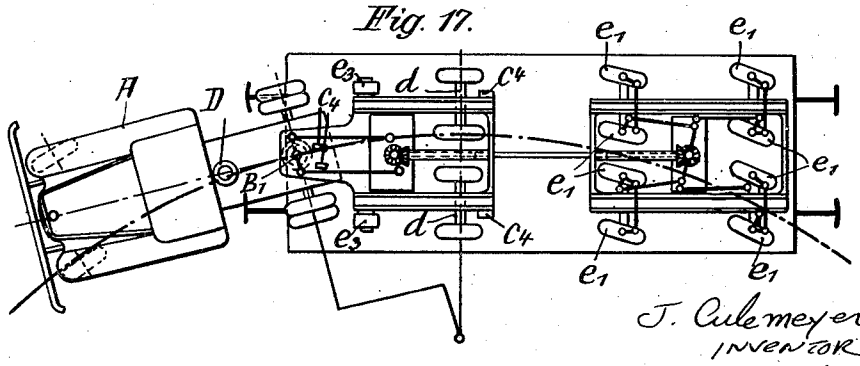

J. Culemeyer
INVENTOR

By: Marks & Clerk
Attys.

Patented Oct. 27, 1936

2,058,955

UNITED STATES PATENT OFFICE

2,058,955

APPLIANCE FOR THE TRANSPORT OF RAILWAY CARS ON STREETS

Johann Culemeyer, Berlin-Charlottenburg, Germany, assignor to Gothaer Waggonfabrik Aktiengesellschaft, Gotha, Germany

Application November 25, 1932, Serial No. 644,353
In Germany October 5, 1931

8 Claims. (Cl. 280—81)

The present invention refers to an appliance for the transport of railway cars on streets.

The known appliances for transporting railway cars on streets suffer from serious drawbacks not only in regard to the low position of the railway car in view of the head-way of under-line passages, but also regarding the steering capacity, the necessary distribution of the load and elasticity of springs. In frequent cases steering capacity is provided by means of a bogie-like superstructure with continuous axles, sometimes even without springs, resulting in a comparatively great construction depth. The wheels are also not able to adapt themselves sufficiently to the defects of the roads. The stresses on the underframe, on the axles and especially on the road are in that case comparatively great. As a result, such appliances will permit only transportation of low railway cars with small loads in view also of the high dead-weight of the appliance itself.

The present invention does away with these drawbacks and defects by using in the appliance as a carrying unit for each wheel of every railway car axle or every two wheels lying one behind the other of multiple axle railway cars one separate rail piece provided with street wheels. An advantage is obtained by reducing the construction depth and guiding also the sides of the railway car wheels by not using standard rail-piece for the latter purposes, but substituting for the same a flat running tread with side cheeks, and, especially if further the respective rail sections are given through shape, a very robust construction will be obtained. The load may be placed still lower if these rail sections are underslung or provided with parts that may be lowered by parallel or shearing motion so that the railway cars will be as little elevated above the floor as possible

In order to assure connection between the street underframes carrying the single axles, without necessitating the transmission of all forces over the axles and the underframe of the railway car, and in order also to guide the underframe so that the play of the railway axles does not add to any disturbances in the running of the street vehicle, the street underframes carrying the single axles or the bogies of the railway car are, according to the invention, connected by means of a fixed intermediate element. This may be a frame piece hung on both underframes or may consist only of a brace, more especially a cross-brace between the underframes, providing the latter with sufficient guidance and connection under the existing operating conditions. The intermediate connecting elements may be kept in stock of various standardized length or adjustable in length, or of a telescoping character, so that the whole street vehicle can be adjusted to the usual lengths or axle distances of railway cars. For transporting empty cars the intermediate element may be detached and placed upon the individual underframe after pushing the latter together. In this manner it is also possible to transport parcels alone, in which case the intermediate element supplies sufficient strengthening of the underframe without the necessity even of making the intermediate member very robust. If required, intermediate elements of a specially substantial construction may be kept in stock. For rolling the railway car on and off, wedges are placed below the intermediate member or it is removed altogether and loading is carried out in the manner described further on.

In order to place the railway car as low as possible in view of the comparatively small headway of the under-line passages and in order to avoid, nevertheless, the drawbacks connected with a normal street vehicle which carries the load at a low level, is loaded with difficulty and apt to run against obstacles on the road, according to the invention the intermediate element may be placed high notwithstanding the low position of the tread or carrying web, especially between the adjacent street wheels, where the railway car wheels are supported. The respective lengths of the underslung portions must be sufficient to receive railway cars of different axle distances without altering the total length of the entire street vehicle.

The reduction of the street vehicle into individual underframes of course results in a more concentrated load and stress on the roadway. This is specially objectionable in regard to the forward or front bogie, because immediately in front thereof the high rear axle pressure of the tractor takes effect on the roadway, so that a local accumulation of high axle pressures is produced. This may be objected to especially when crossing bridges, the more so, as a tractor which is a tractor only should have a comparatively high frictional weight of the rear axle in order to produce the required tractional capacity on rising gradients. The invention shows, therefore, the mode of producing in such cases the frictional weights required for locomotion without the described drawbacks and without objectionable dead weight of the tractor rear axle, and neither a self-contained motor apt to

prevent locomotion altogether in the case of failure to work, nor a troublesome Cardan drive are recommended for utilizing the underframe axle pressures by acting as frictional weights, but it is rather recommended to construct the single front underframe as a saddle traction trailer for the tractor whereby it becomes possible to use a tractor with a very low pressure of the rear axle merely sufficient for the locomotion of the tractor itself.

The reduction of the street vehicle into single trucks and the resulting motile independence of the individual trucks one from the other will permit with advantage also of tilting the carried railway car on end, and this, as a principle, in two respects, namely in order to actuate, on the one hand, the tilting mechanism itself by pushing the trucks together, and on the other hand also, in order to increase the maximum tilting angle by raising the tilting level by pushing the trucks together, or in order to start the tilting process by tilting up a self-contained compendious tilting device that is in a lowered position during locomotion. For these operations of the single trucks or for the simultaneous actuation of the tilting mechanism the tractor can also be used directly or indirectly, in the latter case e. g. as a driving motor with flexible shaft connection and corresponding connecting clutches of the gears.

Also the steering devices, as a rule, by coupling them to the tractor, can be constructed so that the required mobility of the individual trucks is maintained and nevertheless all raising is avoided for any of the wheels. Also the relative displacement of the single trucks can be attained by means of longitudinally traversing driving and transmission shafts for steering and eventually also for the break, this longitudinal drive being adapted to be varied in its effective length, and appliances being provided, such as coupling and independent driving mechanisms which permit alternative operation of the single groups so that by suitably changing over either a curve-true running of all wheels or also a parallel or other springing of the wheels can be obtained. This will meet the requirements of rolling on and off side ways in cramped localities in regard to the ramps.

In the drawings different modifications are illustrated by way of example.

Figs. 1–3 show elevation, ground plan and sectional view of the general structure of the transport appliance.

Figs. 4–6 show details to above.

Figs. 7 and 8 correspond to Figs. 1 and 2, excepting that loose intermediate elements are inserted between the single trucks.

Figs. 9–11 display loading and unloading processes.

Figs. 12–13 show a special disposition of the tread web.

Figs. 14–17 represent the single trucks with the use of a saddle tractor.

Referring to the drawings in detail and more particularly to the form of invention disclosed in Figures 1 to 4, a^1 and a^2 indicate the wheels of a two-axle railway car b. Each wheel is supported by a separate rail piece c which latter is mounted on two short axles d carrying road wheels e.

Each wheel piece is depressed at the medial portion as indicated at h so as to retain the wheels a^1, a^2, and consists, as shown in Fig. 4, of side cheeks c^1 and the tread web c^2.

Each rail piece c and its supporting wheels e constitute a truck and each truck illustrated in Figs. 1 and 2 includes, as more fully shown in Fig. 1^a, a pair of springs f^1 connected at their outer ends with the rail piece c^1 by toggle links 10. The adjacent ends of the springs f^1 are linked to a lever g which latter is pivotally mounted at g^1 to the rail piece c^1. The side members of the rail piece c^1 are slotted to receive the axles d and guide members i. Each guide piece i is provided in its upper portion with a recess receiving the tread portion of the rail piece and is provided on its lower part with a second recess extending at right angles to the first recess and receiving the medial portion of the axle d. A pin k disposed horizontally in the longitudinal axis of the rail piece c^1 pivotally connects the guide member i and the axle d received therein whereby the road wheels e in traversing an uneven roadway may assume different elevations, the axle d turning about the pin k.

The medial portion of each spring f^1 is held in a spring clamp 11 provided with upright extensions 12 which are also pivotally held on the pivot pin k.

Each truck in the modification shown in Figs. 1^c and 2^a is also constituted by a rail piece c and two pairs of road wheels e but in this case the two axles d are connected with the terminals of a single spring f^2 which is held in a clamp 13 secured to the under side of the rail piece intermediate the ends thereof.

Preferably the trucks of each pair are connected together by a cross member l the ends of which are connected with the adjacent vertical portions of the rail pieces c^1.

Also the road wheels d are suitably mounted for steering movement for the purpose of guiding the railway car during transport. According to the arrangement shown in Fig. 2, axles d are mounted in turn about vertical axes whereby the desired steering movement may be imparted to the road wheels e.

According to the arrangement shown in Fig. 2^a the mounting of the road wheels e on the terminals of the axles d is the same as that ordinarily employed in connection with the front wheels of motor vehicles, that is to say, the terminals of each axle are forked as indicated in Fig. 1^b and the road wheels e are mounted on stub axles pivotally mounted on vertical pins in said forked terminals.

In place of the rail piece sagging at h it is possible also to use a straight rail piece, the tread web of which can be vertically raised and lowered at its middle portion. As is shown, the respective part u of the tread web may either, as shown in Fig. 5, be lowered in a parallel position into the situation shown in dashed lines, or in the manner of the shanks of an articulated parallelogram joint, as shown in Fig. 5^a, each of the movable tread portions consists of two parts u^1, u^2 pivotally connected at their adjacent ends and movably supported at their outer ends on rollers v and permitting the lowering of the adjacent ends of the tread members.

The vertically movable tread member u shown in Fig. 5 is adjustable by means of a screw a having the opposite end oppositely threaded and engaged with nuts b^2. Each tread member u is connected by links c^1, c^2 with the nuts b^1 and b^2 whereby when the screw a is rotated in one direction the links c^2 are brought to the vertical position shown in full lines to raise the tread member u but when rotated in the opposite direction the nuts b^2 are moved outwardly thereby tilt-

ing the links c^2 causing the tread member u to lower. According to the arrangement shown in Fig. 5a, the same screw a, nuts b^1 and b^2 and links c^2 and c^2 are provided but in this case the links act to lower the jointed ends of the tread members u^1 and u^2 when the nuts b^1 and b^2 are moved apart.

For no-load travelling the rail pieces positioned one behind the other may, as shown in Fig. 6, be coupled one to the other by any type of clamping or coupling w. In this case the shafts p and q are completely pushed one into the other. This type of coupling results in that the vehicle is of little length and that the single trucks are prevented from running athwart in relation to each other.

According to the Figs. 7 and 8 the same spring mounting of the axles d is employed as shown in Fig. 1c intermediate elements x are interpositioned between the travelling rail pieces c, said elements being also of rail profile. The connection at points y is easily detached e. g. by providing socket connections such as shown.

In the loading arrangement shown in Fig. 9 the railway car b runs from a head ramp z onto the trucks pushed closely together, in such manner, that first the forward railway car axle a^1 rolls over the trucks adjacent to the ramp and the depression portion h of which has been filled out by a suitably shaped section rail piece t, and is made to run onto the rear trucks into the depression therein. Now these trucks are detached from the others and are moved along with the railway vehicle, so that the wheels a^2 roll into the depression h of the forward truck after having first removed the rail piece t. All trucks are now in proper travelling position, so that the intermediate elements x can be inserted and fixed.

As evident from Figs. 10 and 11 loading is carried out in such manner, that the trucks are placed in front and at the rear of the railway car. Now a rolling-on ramp z^1 is placed ahead of the one truck as per Fig. 10 and the railway car is pushed in the direction of the arrow to position its axle wheels a^2 onto the truck. Now the ramp z^1 is placed between axle and wheels a^1 and the correspondingly advanced truck as shown in Fig. 11. By making the railway car travel in the direction of arrow in Fig. 11, the wheel set a^1 is placed upon the truck. Now the truck can be complemented to form the transport appliance by inserting the intermediate elements x.

As seen in Fig. 12, the tread web c^2 which extends the whole length, may be formed so that it presents longitudinal depressions h^1 or h^2 respectively of a certain length and, in relation to the lower edges of the side cheeks c^1 is arranged in a lower position, whereas the tread web is made to rise in continuation thereto and runs up to a higher level corresponding to the greater height of the side cheek at the intermediate element x. In designing the definite and accurate construction reference should be made to the clearance limits when rolling on and off the railway car so as to prevent low positioned parts of the car from meeting obstructions. Special insert sections may be provided for filling up temporarily the depression of the tread webs c^2 when rolling the car on and off. Each rail beam consists, as evident from Fig. 13, of two vertical flanges or side cheeks c^1 connected by the tread web c^2, the dimensions of which correspond to the wheel and gauge profile of the railway wheels.

According to Fig. 14 the front truck c is provided with the rear axles d and the small front wheels e^3 which can be swung upward by means of the adjustable brackets d^1 and may be constructed as a saddle traction trailer so that the forward raised frame head c^3 may be placed upon the saddle of bogie B^1 of tractor A, whereby the frictional weight of the rear axle B of the tractor is increased corresponding to the supporting and load-point distances of truck c.

Intermediate the frame of truck c and the railway car underframe, guides c^4 are provided, which are in the form of stakes or stake straps of truck c. The two stakes at the rear, may be arranged against the side sills of the railway car and the front strap, around the centre longitudinal sill of the railway car underframe, the arrangement being such that a horizontal swerving of the forward truck c against the railway car is prevented in the horizontal direction without restricting the vertical play. Stake and straps may be arranged reversible and may also be fitted to the rear truck.

As seen in Figs. 15 and 16 the forward truck may be joined up to the saddle on the tractor in a loaded state or prior to rolling the railway car onto the truck. For the latter case a specially suitable method is shown in Fig. 16 consisting in that the trucks are first pushed together very closely and then against the head ramp z, so that a continuous railway is formed up to the forward truck c, and in doing so, the depression in the rail beam of the rear truck can be filled up by inserting a suitable filling piece t. By means of the winch D on the tractor and the rope E the railway car b can be drawn upon the track. To this end the car is first drawn forward by means of the arrangement shown in Fig. 16 to a point, where the front axle of the railway car takes up its proper position on truck c and now the tractor A advances together with truck c until the distance between the trucks corresponds to the axle distance of the railway car. During the latter movement the winch D remains arrested so that, at the same tme, the railway car is brought into its proper position as shown in Fig. 14.

I claim:

1. An appliance for transporting railway cars on streets comprising a rail piece for each wheel of the railway car, each rail piece including a girder having a flat tread web and side cheeks adapted to guide and support the railway car wheels, at least two short axles arranged one behind the other directly supporting each rail piece individually, and road wheels carried by said axles and arranged on both sides of said rail piece.

2. An appliance for transporting railway cars on streets comprising a rail piece for each wheel of the railway car, each rail piece including linked sections adapted to lower the car wheel supported thereon, at least two short axles arranged one behind the other directly supporting each rail piece individually, and road wheels carried by said axles and arranged on both sides of said rail piece.

3. An appliance for transporting railway cars on streets comprising a rail piece for each wheel of the railway car, each rail piece including a depressed medial portion and an adjustable element adapted to fill out the depressed portion, at least two short axles arranged one behind the other directly supporting each rail piece individually, and road wheels carried by said axles and arranged on both sides of said rail piece.

4. An appliance for transporting railway cars on streets comprising a rail piece for each wheel of the railway car, at least two short axles arranged

one behind the other under each rail piece and movable vertically with respect to said rail piece; springs supporting said axles, compensating means connecting said springs, and road wheels carried by said axles and arranged on both sides of said rail piece.

5. An appliance for transporting railway cars on streets comprising a rail piece for each wheel of the railway car, at least two short axles arranged one behind the other directly supporting each rail piece individually, road wheels carried by said axles and arranged on both sides of said rail piece, and a detachable intermediate element connecting the rail pieces carrying the car wheels.

6. An appliance for transporting railway cars on streets comprising a rail piece for each wheel of the railway car, at least two short axles arranged one behind the other directly supporting each rail piece individually, road wheels carried by said axles and arranged on both sides of said rail piece, and a frame piece hung between said rail pieces.

7. An appliance for transporting railway cars on streets comprising rail pieces for each wheel of the railway car, at least two short axles arranged one behind the other directly supporting each rail piece individually, road wheels carried by said axles and arranged on both sides of said rail piece, and cross trusses intermediate the rail pieces.

8. An appliance for transporting railway cars on streets comprising a rail piece for each wheel of the railway car, at least two short axles arranged one behind the other directly supporting each rail piece individually, road wheels carried by said axles and arranged on both sides of said rail piece, a trough-shaped element connecting the ends of the rail pieces, the medial portions of the rail pieces being depressed.

JOHANN CULEMEYER.