(19) DANMARK

(10) DK/EP 2558358 T3

(12) Oversættelse af europæisk patentskrift

Patent- og Varemærkestyrelsen

(51) Int.Cl.: *B 63 C 7/02 (2006.01)* *B 63 C 7/04 (2006.01)* *B 63 C 7/28 (2006.01)*
B 63 H 25/48 (2006.01) *B 66 C 13/02 (2006.01)* *B 66 C 17/06 (2006.01)*
B 66 C 23/52 (2006.01) *B 66 C 23/53 (2006.01)* *B 66 C 23/64 (2006.01)*

(45) Oversættelsen bekendtgjort den: **2014-12-01**

(80) Dato for Den Europæiske Patentmyndigheds bekendtgørelse om meddelelse af patentet: **2014-08-20**

(86) Europæisk ansøgning nr.: **10849966.6**

(86) Europæisk indleveringsdag: **2010-04-14**

(87) Den europæiske ansøgnings publiceringsdag: **2013-02-20**

(86) International ansøgning nr.: **US2010031037**

(87) Internationalt publikationsnr.: **WO2011129822**

(84) Designerede stater: **AT BE BG CH CY CZ DE DK EE ES FI FR GB GR HR HU IE IS IT LI LT LU LV MC MK MT NL NO PL PT RO SE SI SK SM TR**

(73) Patenthaver: **Khachaturian, Jon, 5427 Sutton Place, New Orleans, Louisiana 70131, USA**

(72) Opfinder: **Khachaturian, Jon, 5427 Sutton Place, New Orleans, Louisiana 70131, USA**

(74) Fuldmægtig i Danmark: **NORDIC PATENT SERVICE A/S, Højbro Plads 10, 1200 København K, Danmark**

(54) Benævnelse: **MARINELØFTEANORDNING**

(56) Fremdragne publikationer:
WO-A1-99/13164
KR-A- 20100 008 652
US-A- 3 807 336
US-A1- 2007 231 076
US-A1- 2009 301 372

Description

BACKGROUND OF THE INVENTION

1. Field of the Invention

[0001] The present invention relates to marine lifting devices. More particularly, the present invention relates to an improved catamaran type lifting apparatus that employs spaced apart or catamaran hulls, each of the hulls supporting a truss or frame that spans between the hulls at spaced apart positions. Even more particularly, the present invention relates to an improved catamaran lifting apparatus for use in a marine environment, wherein spaced apart frames are connected to the hulls in a configuration that spaces the vessels apart, the first frame connecting with a first of the hulls with the universal joint and to the second hull with a hinged connection, the second frame connecting to the second hull with a universal joint and to the first hull with a hinged connection.

2. General Background of the Invention

[0002] A catamaran lifting apparatus that can be used to lift multi-ton objects employs two spaced apart barges or hulls or vessels. In general, such lifting devices that employ a pair of spaced apart hulls have been patented. Additionally, many marine lifting patents having been issued to applicant. One such example is US2007231076A1 which discloses a catamaran lifting apparatus for lifting objects in a marine environment. The apparatus includes first and second vessels that are spaced apart during use. A first frame spans between the vessels. A second frame spans between the vessels. The frames are spaced apart and connected to the vessels in a configuration that spaces the vessels apart. Other examples of relevant patents are contained in the following table, the order of listing being of no significance.

TABLE 1

PATENT NO.	TITLE	ISSUE DATE
		MM-DD-YY
485,398	Apparatus for Raising Sunken Vessels	11-01-1892
541,794	Apparatus for Raising Sunken Vessels	06-25-1895
1,659,647	Sea Crane	02-21-1928

PATENT NO.	TITLE	ISSUE DATE
		MM-DD-YY
4,714,382	Method and Apparatus for the Offshore Installation of Multi-Ton Prefabricated Deck Packages on Partially Submerged Offshore Jacket Foundations	12-22-1987
5,607,260	Method and Apparatus for the Offshore Installation of Multi-Ton Prefabricated Deck Packages on Partially Submerged Offshore Jacket Foundations	03-04-1997
5,609,441	Method and Apparatus for the Offshore Installation of Multi-Ton Prefabricated Deck Packages on Partially Submerged Offshore Jacket Foundations	03-11-1997
5,662,434	Method and Apparatus for the Offshore Installation of Multi-Ton Prefabricated Deck Packages on Partially Submerged Offshore Jacket Foundations	09-02-1997
5,800,093	Method and Apparatus for the Offshore Installation of Multi-Ton Packages Such as Deck Packages, Jackets, and Sunken Vessels	09-01-1998
5,975,807	Method and Apparatus for the Offshore Installation of Multi-Ton Packages Such as Deck Packages and Jackets	11-02-1999
6,039,506	Method and Apparatus for the Offshore Installation of Multi-Ton Packages Such as Deck Packages and Jackets	03-21-2000
6,149,350	Method and Apparatus for the Offshore Installation of Multi-Ton Packages Such as Deck Packages and Jackets	11-21-2000
6,318,931	Method and Apparatus for the Offshore Installation of Multi-Ton Packages Such as Deck Packages and Jackets	11-20-2001
6,364,574	Method and Apparatus for the Offshore Installation of Multi-Ton Packages Such as Deck Packages and Jackets	04-02-2002
7,527,006	Marine lifting apparatus	05-05-2009

BRIEF SUMMARY OF THE INVENTION

[0003] The present invention provides an improved catamaran lifting apparatus that employs first and second spaced apart vessels or hulls. The vessels can be barges, dynamically positioned marine vessels, other floating hulls or the like.

[0004] A first frame or truss spans between the hulls at a first position. A second frame or truss spans between the hulls at a second position. The first and second positions are spaced apart so that each frame can move independently of the other, notwithstanding wave action acting upon the hulls.

[0005] The first of the frames or trusses connects to the first hull with a universal joint and to the second hull with a hinged connection. The second frame connects to the second hull with a universal joint and to the first hull with a hinged connection. The catamaran hull arrangement provides longitudinal flexibility in a quartering sea state due to the unique universal joint and hinge placement between the frames or trusses and the hulls or barges.

[0006] Each frame extends upwardly in a generally inverted u-shape that provides space under the frame and in between the hulls for enabling a marine vessel to be positioned in between the hulls and under the frames. The space in between the hulls and under the frames can also be used as clearance for elevating an object to be salvaged from the seabed to a position next to or above the water's surface.

[0007] In a plan view, each frame can be generally triangular in shape. The frames can each be of a truss configuration.

[0008] In a second embodiment, one or more slings can be provided that connect between a frame and a hull. The connection of each frame to a hull opposite the universal joint can be a pinned or a hinged connection.

[0009] In another embodiment, dynamically positioned vessels are controlled from a single computer, single locale or by a single bridge or pilot. This specially configured arrangement enables the use of two class one (1) dynamically positioned vessels to be used to form a new vessel which is classified as a class two (2) dynamically positioned vessel. The method and apparatus of the present invention allows for the structural coupling of two existing vessels (ships, supply boats etc.). The vessels provide a structural foundation for the gantry system for lifting operations as well as personnel housing, propulsion for combined system travel and position keeping through the use of dynamic positioning.

[0010] Through the integration of two vessels with existing propulsion and dynamic positioning systems to form a single vessel/system, the performance of the propulsion and dynamic positioning systems for the integrated vessel/system is superior. This arrangement provides vessels of one class of DP system such as DP class 1. However, with the method and apparatus of the present invention, a new vessel will have a DP system of a higher class such as DP 2 as a result of being combined/integrated together to form a single system. The performance of the propulsion system for the combined system of the present invention will also be superior when compared to the performance of the individual vessels. Superior in this regards means that the combined system will have multiple independent engine rooms and fuel supplies which provides greater propulsion redundancy. The loss of a main engine room due to

flood or fire, or the contamination of an engine room fuel supply on one of the vessels will no longer result in the loss of propulsion for the combined system.

[0011] Similarly steerage for the combined system can still be achieved given the loss of steerage (rudder or equivalent system) on one of the individual vessels.

[0012] All of the above make the performance of the combined system superior to the performance of the existing individual systems without fundamental change or modification to the individual vessels, i.e. it is the combining of the vessels through the use of gantries which are enabled by the Bottom Feeder technology which lead to the performance improvements.

[0013] The "quality" of a dynamic positioning system can be measured via robustness of the system and capability. Robustness of the system is a measure of how many components within the DP system can fail and the DP system remain able to maintain station keeping capabilities. The international standard for this is to assign a rating or classification to the DP system. There are three ratings: Class 1, Class 2 and Class 3 (see supplied reference data on this). Higher classes of system have greater degrees of design redundancy and component protection. Through the integration of two lower class vessels, higher levels of component and system redundancy automatically result. The ability of the system to maintain station within a given set of wind, wave and current conditions is generally referred to as "capability". The higher capability the worse the conditions the system can stay on location during. Capability is in turn a function of thruster horsepower (or equivalent), numbers of thrusters and disposition (location) of thrusters around the vessel which will influence a thrusters ability to provide restoring force capability. Through the integration of two vessels of a given capability increased capabilities will result since (a) there are now more thrusters in the combined system, and (b) the thrusters have a much better spatial distribution which means that the thrusters can provide a greater restoring capability. Further, the capability of the DP system will be superior even given the loss of system component for the same reasons in (a) and (b). Damaged system capability is also another recognized measure of DP system quality.

BRIEF DESCRIPTION OF THE SEVERAL VIEWS OF THE DRAWINGS

[0014] For a further understanding of the nature, objects, and advantages of the present invention, reference should be had to the following detailed description, read in conjunction with the following drawings, wherein like reference numerals denote like elements and wherein:

Figure 1 is a perspective view of the preferred embodiment of the apparatus of the present invention;

Figure 2 is an elevation view of the preferred embodiment of the apparatus of the present invention;

Figure 3 is an end, elevation view of the preferred embodiment of the apparatus of the present invention;

Figure 4 is a top plan view of the preferred embodiment of the apparatus of the present invention, with each winch and lifting line removed for clarity;

Figure 5 is a perspective view of the preferred embodiment of the apparatus of the present invention;

Figure 6 is an elevation view of the preferred embodiment of the apparatus of the present invention wherein the hulls are dynamically positioned vessels;

Figure 7 is a plan view of the preferred embodiment of the apparatus of the present invention wherein the hulls are dynamically positioned vessels;

Figure 8 is a perspective view of a preferred embodiment of the apparatus of the present invention wherein the hulls are dynamically positioned vessels;

Figure 9 is a plan view of one embodiment of the method and apparatus of the present invention;

Figure 10 is a perspective view of one embodiment of the method and apparatus of the present invention;

Figure is 11 a perspective view of one embodiment of a retrofit base for the method and apparatus;

Figure 12 is a plan view of the base of Figure 11;

Figure 13 is a side view of the base of Figure 11;

Figure 14 is a plan view of one embodiment of the method and apparatus with a universal retrofit base for retrofitting existing offshore supply vessels to implement the method and apparatus;

Figure 15 is a plan view of one embodiment of the method and apparatus with a universal retrofit base for retrofitting existing offshore supply vessels to implement the method and apparatus;

Figure 16 is a side view of the embodiment of Figure 15 with a universal retrofit base for retrofitting existing offshore supply vessels to implement the method and apparatus;

Figure 17 shows a plurality of cross sections of hulls on which a universal retrofitting base can be used;

Figure 18 is a schematic diagram of one embodiment of the method and apparatus incorporating a combined vessel DP system; and

Figure 19 is a schematic diagram of one embodiment of the method and apparatus incorporating a combined vessel propulsion and steerage system.

DETAILED DESCRIPTION OF THE INVENTION

[0015] Figure 1 shows the preferred embodiment of the apparatus of the present invention designated generally by the numeral 10. Marine lifting apparatus 10 provides a pair of spaced apart vessels or hulls 11, 12. Hulls 11, 12 can be barges, dynamically positioned vessels (see figures 6-8), or any other

buoyant structure. A pair of frames 13, 14 are provided, each frame 13,14 spanning between the vessels 11,12. Each frame 13, 14 connects to one vessel 11 or 12 with a universal joint 15 and to the other hull 11 or 12 with a hinged or pinned connection 16.

[0016] The frame 13 connects to hull 11 with universal joint 15. The frame 13 connects to vessel 12 with pinned connection or hinge 16. Similarly, the second frame 14 connects to hull 12 with a universal joint 17 and to hull 11 with a hinge or pinned connection 18.

[0017] An interface such as a deck beam can be provided on the upper deck 30 of each hull 11, 12 for forming an interface between the frames 13, 14 and the vessels 11, 12. For example, vessel 11 is provided with deck beam 19 that forms an interface between each of the frames 13,14 and the barge or vessel 11. Deck beam 20 provides an interface between each of the frames 13, 14 and the vessel or barge 12.

[0018] In figures 1 and 4, a plan or top view of the apparatus 10 of the present invention is shown with each winch and lifting line removed for clarity. A lifting area 21 is that area that is in between the vessels 11, 12, the area 21 having a length defined by dimension arrow 23 and a width defined by dimension arrow 22 in figure 4. This area 21 is sized and shaped to receive a vessel having a cargo to be lifted if that cargo (e.g., deck package) is to be installed. Alternatively, the area 21 can be an area that receives an item to be salvaged from an ocean floor such as a sunken boat or the like. In either case, a clearance is provided above the water surface 24 so that a barge or vessel can be placed under frames 13,14 to receive the item (e.g., boat 33) that is salvaged from seabed 34.

[0019] In figure 3, a clearance is indicated schematically by the dimension line 25. Similarly, a clearance 26 is provided above the maximum deck elevation 35 of the hulls 11, 12 as shown in figure 3.

[0020] Each of the frames 13, 14 can be in the form of a truss as shown. Each frame 13, 14 can thus provide a center truss section 27, a smaller side truss section 28 and another smaller side truss section 29. Pinned connections 31, 32 can be provided for attaching the smaller truss sections 28, 29 to the larger center truss section 27 as shown in figure 3. For the frame of figures 2-5, slings (not shown) can optionally be provided for connecting the center section 27 to the lower end portion of each of the smaller truss sections 28, 29. Shackles can be used to attach any slings to eyelets or padeyes on the center section 27. Likewise, shackles can be used to attach the slings to eyelets or padeyes or other attachments on the smaller truss sections 28, 29.

[0021] One or more hooks 40 or other lifting fitting can be attached to a lifting line 41 and payed out from winch 42. Sheaves 43, 44, 45 as needed can be used to route the line 41 from winch 42 to hook 40. Line 41 can be a multiple line assembly to increase lift capacity. Hook 40 can be any lifting fitting such as any known crown block, for example.

[0022] Figures 7-8 illustrate that dynamically positioned vessels 46, 47 can be used to support frames 13,14. Dynamically positioned vessels 46,47 are commercially available and are known. Dynamic positioning systems for vessels are commercially available. An example is the Kongsberg Simrad SBP10 work station. Such vessels 46, 47 can maintain a position even without the use of anchors.

Dynamic positioning is a computer controlled system to automatically maintain a vessel's position and heading by using the vessel's own propellers and/or thrusters. Position reference sensors, combined with wind sensors, motion sensors and gyro compasses provide information to the computer pertaining to the vessels position and the magnitude and direction of the environmental forces affecting its position. Typically, a computer program contains a mathematical model of the vessel that includes information pertaining to wind and current drag of the vessel and the location of the thrusters. This knowledge, combined with the sensor information allows the computer to calculate the required steering angle and/or thruster output for each thruster. This allows operations at sea while mooring or anchoring is not feasible due to deep water, congestion on the sea bottom (pipelines, templates) or other problems.

[0023] Dynamic positioning may either be absolute in that the position is locked to a fixed point over the bottom, or relative to a moving object like another ship or an underwater vehicle. One may also position the ship at a favorable angle towards the wind, waves and current, called weathervaning. Dynamic position is much used in the offshore oil industry. There are more than 1,000 dynamic positioning ships in existence.

[0024] In figures 7-8, dynamically positioned vessels 46, 47 each have a deck, pilot house or cabin, bow and stern. The dynamically positioned vessel 46 provides deck 48, pilot house 49, bow 50 and stern 51. Dynamically positioned vessel 47 provides a deck 52, pilot house 53, bow 54, stern 55.

[0025] Load spreader platforms can be provided to define an interface between each of the frames 13,14 and the dynamically positioned vessels 46,47. Load spreader platform 56 is positioned under articulating connection 15 while load spreader platform 57 is positioned under hinge orpinned connection 16. Load spreader platform 58 is positioned under articulating connection 17, forming an interface between that connection 17 and the deck 48 of vessel 46. Similarly, load spreader platform 59 forms an interface between deck 52 of vessel 47 and hinged or pinned connection 18 as shown in figures 5-8.

[0026] In the preferred embodiment, the frames 13, 14 are positioned in between the pilot house of each dynamically positioned vessel and the stern of each dynamically positioned vessel as shown in figure 7. In the preferred embodiment, the dynamically positioned vessels 46, 47 are positioned so that both vessels 46, 47 have the bow 50, 54 pointed in the same direction and the stern 51, 55 pointed in the same direction, as shown in figures 7-8.

[0027] As with the preferred embodiment of figures 1-5, each frame 13, 14 can be provided with a winch 42 and multiple sheaves 43-45 and lifting line 41 with hook 40 and any other suitable rigging that enables the frames 13, 14 to lift objects from the seabed 34 or to support items in between the dynamically positioned vessels 46, 47 in load area 60 and under frames 13, 14. Figure 9 is a plan view of one embodiment of method and apparatus 410 of the present invention. Figure 10 is a perspective view of one embodiment of combined vessel 410.

[0028] In figures 9 and 10, dynamically positioned vessels 100, 110 each have a deck, pilot house or cabin, bow and stem. The dynamically positioned vessel 100 provides deck 120, pilot house 130, bow

140 and stern 150. Dynamically positioned vessel 110 provides a deck 160, pilot house 170, bow 180, stern 190.

[0029] Load spreader platforms can be provided to define an interface between each of the frames 13, 14 and the dynamically positioned vessels 100, 110. Load spreader platform 56 is positioned under articulating connection 15 while load spreader platform 57 is positioned under hinge or pinned connection 16. Load spreader platform 58 is positioned under articulating connection 17, forming an interface between that connection 17 and the deck 160 of vessel 110. Similarly, load spreader platform 59 forms an interface between deck 120 of vessel 100 and hinged or pinned connection 18 as shown in figure 9 and 10.

[0030] Figure is 11 a perspective view of one embodiment of a retrofit base 200 for the method and apparatus designed specially to be used to retrofit existing vessels, such as work barges. Base 200 can include surface 220 and plurality of connections 210. Base 200 can also include plurality of connections points 230 for connecting to frames 13 and 14.

[0031] Different existing vessels have different configurations and different locations of structural supporting points. Figure 12 is a plan view of the base 200. Figure 13 is a side view of base 200.

[0032] Base 200 can include a plurality of connection points or plates 210 for connecting to frames 13,14 which connection points have been located to adequately connect frames 13,14 at the proper spaced apart distance. Plurality of connection points 210 can be used to connect to the myriad of configurations seen on existing vessels. Figure 17 shows a plurality of cross section of hulls on which retrofitting base can be used. A portion of the decking material for the existing vessel can be removed and plurality of connection points can be connected to the structural support members of the existing vessel.

[0033] In one embodiment the plurality of connecting points plates or members 210 are adjustable relative to base 200. In one embodiment a base 200 can be designed to have connecting points 210 at specific locations to fit a particular existing vessel of a particular construction. Connecting plates 210 can be structurally attached to the structure support areas of an existing vessel, such as structurally connected to the hull of the existing vessel.

[0034] Figure 14 is a plan view of one embodiment where two retrofitting bases 200,300 have been attached to two existing vessels 46,47. Base 300 can be substantially similar to base 200. Base 300 can include surface 320 and plurality of connections 310. Base 300 can also include plurality of connections points 330 for connecting to frames 13 and 14. Alternatively, base 300 can be specially designed to attached to the structural attachments of existing vessel 46 which attachment points do not have the same spacial separation as the attachment points in vessel 47. To attach the bases part of the wood decking can be removed to obtain access to the underlying support structure of each vessel.

[0035] Figure 15 is a plan view of one embodiment where frames 13 and 14 have been attached to both bases 200 and 300 which now structurally integrate existing vessel 46 and 47. Figure 16 is a side view of structurally integrated vessels 46 and 47. In figure 16, the winches can be traction winches 62 (e.g.

hydraulic traction winches). Generally speaking, traction winches and hydraulic traction winches are commercially available. Each traction winch 62 is mounted on a frame 13 or 14. In figure 16, each traction winch 62 can include a first drum 64, second drum 66 and third drum 68. Each drum 64, 66, 68 is preferably mounted on a frame 13 or 14 as seen in figure 16. Line 41 can be wound upon the first drum 64 one, two, three, four or more times. From drum 64, line 41 is routed to drum 66 and then would upon drum 66 one, two, three, four or more times. The third drum 68 is a spooling drum sized and shaped to carry many winds of the line 41. In this fashion, first and second drums 64 and 66 are used to carry the load of line 41 and a spreader bar 70 or other rigging that connects line 41 to the load or package to be lifted or salvaged from a sea bottom or sea bed. As with other embodiments, line 41 is rigged to one or more sheaves or rollers 71, 72, 73. Each sheave or roller 71, 72, 73 is attached to a frame 13 or 14. Lifting line 41 can have a buoyancy under water of between about minus five (- 5.0) and 10 pounds per foot (14.88 kg/m). Alternatively, lifting line 41 can have a buoyancy under water of between about minus five (- 5.0) and 100 pounds per foot (148.81 kg/m). The buoyance under water of the line 41 can be between about minus two (- 2.0) and two (2.0) pounds per foot (2.98 kg/m). In one embodiment, line 41 can be neutral buoyancy line in water. The line 41 can be a synthetic material such as a rope made with ultra high molecular weight polyethylene fiber (UHMWPE), such as rope sold under the trademark Dyneema.

DYNAMIC POSITIONING SYSTEM

[0036] Figure 18 is a schematic diagram of an overall structurally integrated vessel 410 schematically showing the integration of vessel 100 and 110 incorporating an overall combined vessel DP system 400. As used herein, "DP" means dynamically positioned".

[0037] Figure 19 is a schematic diagram of an overall structurally integrated vessel 410 schematically showing the integration of vessel 100 and vessel 110 and incorporating an overall combined vessel propulsion and steerage system 420.

[0038] In one embodiment gantry 115 can be used to structural couple two existing vessels 100, 110 (ships, supply boats, etc.). The coupled vessels 100, 110 can provide:

(a) a structural foundation for the gantry system 115 for lifting operations;

(b) personnel housing;

(c) propulsion for combined system travel; and

(d) position keeping through the use of dynamic positioning.

[0039] Structurally integrating two existing stand along vessels 100 and 110 (having conventional propulsion and dynamic positioning systems) thereby forming a single overall vessel/system 410, can

enhance the performance of both the propulsion and the dynamic positioning systems for the two integrated vessel/system. For example, structurally integrating two existing vessels (each having a class of DP system such as DP class 1) will cause the DP system of the structurally integrated vessel to be a higher class such as DP 2 (because the combined/integrated vessels, propulsion systems, and DP systems form a single integrated system).

[0040] The performance of the propulsion system for the combined system will also be superior when compared to the performance of the existing individual vessels.

[0041] For example, the structurally combined and integrated vessel system will have multiple independently operable engine rooms and multiple fuel supplies, thereby providing greater propulsion redundancy. The loss of one of the main engine rooms due to flood or fire, or the contamination of an engine room fuel supply on one of the vessels will no longer result in the loss of propulsion for the combined system as the redundant engine room will still be operable.

[0042] Similarly, steerage for the structurally combined and integrated vessel system can still be achieved given the loss of steerage (rudder or equivalent system) on one of the individual vessels.

[0043] All of the above make the performance of the combined system superior to the performance of the existing individual systems without fundamental change or modification to the individual vessels. It is structurally combining and integrating the vessels through the use of bottom feeder gantries which lead to the performance improvements.

Supporting Data

[0044] The "quality" of a dynamic positioning system can be measured via the following:

Robustness of the system. This is a measure of how many components within the DP system can fail and the DP system remain able to maintain station keeping capabilities. The international standard for this is to assign a rating or classification to the DP system. Generally, there are three ratings: Class 1, Class 2 and Class 3. Higher classes of DP system have greater degrees of design redundancy and component protection.

[0045] Through the integration of two lower level DP class vessels will automatically result in higher levels of component and system redundancy.

[0046] The ability of the system to maintain station within a given set of wind, wave, and current conditions is generally referred to as "Capability." The higher the "Capability" of a vessel, the worse the conditions the vessel can stay on location during such conditions. "Capability" itself is a function of:

thruster horsepower (or equivalent),

numbers of thrusters, and

disposition (location) of thrusters around the vessel which will influence a thrusters ability to provide restoring force capability.

[0047] Through the structural combination and integration of two vessels of given "capabilities", the "Capability" of the structurally combined and integrated vessel is increased compared to the

"capability" of either vessel before such combination and integration. Increased "Capability" will be the result of:

(a) there being more thrusters in the structurally combined and integrated system, and

(b) the thrusters having a better spatial distribution in the structurally combined and integrated system (meaning that the thrusters can provide a greater restoring capability to the combined and integrated system compared to either vessel alone).

[0048] Additionally, the capability of the overall DP system in the structurally combined and integrated vessel will be superior even given the loss of one of the components of one of the DP systems in one of the vessels for the same reasons as specified in (a) and (b) above.

[0049] Damaged system capability is also another recognized measure of DP system quality.

STRUCTURALLY COMBINED AND INTEGRATED FIRST AND SECOND VESSELS TO CREATE A SINGLED COMBINED VESSEL

DP Combination

[0050] In one embodiment a first vessel 100 and a second vessel 110 are structurally combined and integrated, the

(1) first vessel 100 comprising:

(a) a hull,

(b) a thruster 500, 510, 520, 530 for the first vessel powering the hull of the first vessel,

(c) a position reference system 502, 512, 522, 532 for the first vessel providing the position of the first vessel, and

(d) a DP controller system 504, 514, 524, 534 for the first vessel operatively connected to the first thruster 500, 510, 520, 530 of the first vessel and first position referencing system 502, 512, 522, 532 of the first vessel;

(2) second vessel 110 comprising:

(a) a hull,

(b) a thruster 600, 610, 620, 630 for the second vessel powering the hull of the second vessel,

(c) a position referencing system 602, 612, 622, 632 for the second vessel providing the position of the second vessel,

(d) a DP controller system 604, 614, 624, 634 for the second vessel operatively connected to the thruster 600, 610, 620, 630 for the second vessel and position referencing system 602, 612, 622, 632 for the second vessel;

and

including an overall DP controller system 400 operatively connected to both the DP controller system 504, 514, 524, 534 for the first vessel and the DP controller system 604, 614, 624, 634 for the second vessel, wherein the overall DP controller system 400 can directly or indirectly control one or more of the following:

(I) thruster 500, 510, 520, 530 for the first vessel,

(ii) position referencing system 502, 512, 522, 532 for the first vessel,

(iii) thruster 600, 610, 620, 630 for the second vessel, and

(iv) position referencing system 602, 612, 622, 632 for the second vessel.

[0051] In one embodiment the first and/or second vessels are used vessels and taken out of service to be structurally combined and integrated.

[0052] In one embodiment a first vessel 100 and a second vessel 110 are structurally combined and integrated, the

(1) first vessel 100 comprising:

(a) a hull,

(b) a plurality of thrusters for the first vessel, each powering the hull of the first vessel,

(c) a plurality of position referencing systems for the first vessel, each providing the position of the first vessel, and

(d) a plurality of DP controller systems for the first vessel, each being operatively connected to the plurality of thrusters for the first vessel and plurality of position referencing systems for the first vessel;

(2) second vessel 110 comprising:

(a) a hull,

(b) a plurality of thrusters for the second vessel, each powering the hull of the second vessel,

(c) a plurality of position referencing systems for the second vessel, each providing the position of the second vessel,

(d) a plurality of DP controller systems for the second vessel, each being operatively connected to the plurality of thrusters for the second vessel and plurality of position referencing system for the second vessel;

and

having an overall DP controller operatively connected to both the DP controller for the first vessel and the DP controller for the second vessel wherein the DP controller can directly or indirectly control any of the following:

(I) one or more of the thrusters for the first vessel,

(ii) one or more of the position referencing systems for the first vessel,

(iii) one or more of the thrusters for the second vessel, and

(iv) one or more of the position referencing systems for the second vessel,

Steering and Propulsion Combination (Figure 19)

[0053] In one embodiment a first vessel and a second vessel are structurally combined and integrated, the

(1) first vessel 100 comprising:

(a) a hull,

(b) an engine 506, 516, 526, 536 for the first vessel 100 powering the hull of the first vessel, and

(c) a steerage system 507, 517, 527, 537 for the first vessel steering the first vessel;

(d) a bridge controller system 508, 518, 528, 538;

(2) second vessel 110 comprising:

(a) a hull,

(b) an engine 606, 616, 626, 636 for the second vessel powering the hull of the second vessel, and

(c) a steerage system 607, 617, 627, 637 for the second vessel steering the second vessel;

(d) a bridge controller system 608, 618, 628, 638;

and

including an overall bridge controller computer 420 operatively connected to each of the engine 506, 516, 526, 536 for the first vessel, steerage system 507, 517, 527, 537 for the first vessel, engine 606, 616, 626, 636 for the second vessel, and steerage system 607, 617, 627, 637 for the second vessel, wherein the overall bridge controller computer can directly or indirectly control one or more of the following:

(I) engine 506, 516, 526, 526 for the first vessel,

(ii) steerage system 507, 517, 527, 537 for the first vessel,

(iii) engine 606, 616, 626, 636 for the second vessel, and

(iv) steerage system 607, 617, 627, 637 for the second vessel.

[0054] In one embodiment the overall bridge controller is located on one of the two vessels.

[0055] In one embodiment the first and/or second vessels are used vessels and taken out of service to be structurally combined and integrated.

[0056] In one embodiment a first vessel and a second vessel are structurally combined and integrated, the

(1) first vessel 100 comprising:

(a) a hull,

(b) a plurality of engines for the first vessel, each powering the hull of the first vessel, and

(c) a plurality of steerage systems for the first vessel, each steering the first vessel;

(2) second vessel 110 comprising:

(a) a hull,

(b) a plurality of engines for the second vessel, each powering the hull of the second vessel, and

(c) a plurality of steerage systems for the second vessel, each steering the second vessel,

and

including an overall bridge controller computer operatively connected to each of the engines for the first vessel, steerage systems for the first vessel, engines for the second vessel, and steerage systems for the second vessel, wherein the overall bridge controller computer can directly or indirectly control the following:

(I) one or more of the engines for the first vessel,

(ii) one of more of the steerage systems for the first vessel,

(iii) one or more of the engines for the second vessel, and

(iv) one or more of the steerage systems for the second vessel.

[0057] Further embodiments may be understood by referring to the following numbered clauses:

44. A method creating an overall structurally integrated vessel from two existing vessels comprising the steps of:

1) providing a first used vessel, the first vessel comprising:

(a) a hull,

(b) a thruster for the first vessel powering the hull of the first vessel,

(c) a position reference system for the first vessel providing the position of the first vessel, and

(d) a DP controller system for the first vessel operatively connected to the first thruster of the first vessel and first position referencing system of the first vessel;

2) providing a second used vessel comprising:

(a) a hull,

(b) a thruster for the second vessel powering the hull of the second vessel,

(c) a position referencing system for the second vessel providing the position of the second vessel,

(d) a DP controller system for the second vessel operatively connected to the thruster for the second vessel and position referencing system for the second vessel;

3) retrofitting the first and second vessels by

(i) spanning a first frame between the vessels;

(ii) spanning a second frame between the vessels;

(iii) spacing the frames apart and connecting the frames to the vessels in a configuration that spaces the vessels apart;

(iv) connecting the first frame to the first vessel with a universal joint and to the second vessel with a hinged connection;

(v) connecting the second frame to the second vessel with a universal joint, and to the first vessel with a hinged connection;

(vi) extending each frame upwardly in an inverted u-shape, providing a space under the frame and in between the vessels, enabling a marine vessel to position in between the vessels and under the frames; and

(vii) rigging each frame with a winch and a winch line for enabling the combination of vessels and frames to lift objects from a position generally under the frames and in between the vessels.

4) providing an overall DP controller system operatively connected to both the DP controller system for the first vessel and the DP controller system for the second vessel, wherein the overall DP controller system directly or indirectly controls one or more of the following:

(i) thruster for the first vessel,

(ii) position referencing system for the first vessel,

(iii) thruster for the second vessel, and

(iv) position referencing system for the second vessel.

45. A method creating an overall structurally integrated vessel from two existing vessels comprising the steps of:

1) providing a first used vessel, the first vessel comprising:

(a) a hull,

(b) a plurality of thrusters for the first vessel, each powering the hull of the first vessel,

(c) a plurality of position referencing systems for the first vessel, each providing the position of the first vessel, and

(d) a plurality of DP controller systems for the first vessel, each being operatively connected to the plurality of thrusters for the first vessel and plurality of position referencing systems for the first vessel;

2) providing a second used vessel comprising:

(a) a hull,

(b) a plurality of thrusters for the second vessel, each powering the hull of the second vessel,

(c) a plurality of position referencing systems for the second vessel, each providing the position of the second vessel,

(d) a plurality of DP controller systems for the second vessel, each being operatively connected to the plurality of thrusters for the second vessel and plurality of position referencing system for the second vessel; and

3) retrofitting the first and second vessels by

(i) spanning a first frame between the vessels;

(ii) spanning a second frame between the vessels;

(iii) spacing the frames apart and connecting the frames to the vessels in a configuration that spaces the vessels apart;

(iv) connecting the first frame to the first vessel with a universal joint and to the second vessel with a hinged connection;

(v) connecting the second frame to the second vessel with a universal joint, and to the first vessel with a hinged connection;

(vi) extending each frame upwardly in an inverted u-shape, providing a space under the frame and in between the barges, enabling a marine vessel to position in between the barges and under the frames; and

(vii) rigging each frame with a winch and a winch line for enabling the combination of vessels and frames to lift objects from a position generally under the frames and in between the vessels; and

4) providing an overall DP controller system operatively connected to both the DP controller system for the first vessel and the DP controller system for the second vessel, wherein the DP controller can directly or indirectly control any of the following:

(i) one or more of the thrusters for the first vessel,

(ii) one or more of the position referencing systems for the first vessel,

(iii) one or more of the thrusters for the second vessel, and

(iv) one or more of the position referencing systems for the second vessel.

46. A method creating an overall structurally integrated vessel from two existing vessel comprising the steps of:

1) providing a first used vessel, the first vessel comprising:

(a) a hull,

(b) an engine for the first vessel powering the hull of the first vessel, and

(c) a steerage system for the first vessel steering the first vessel;

2) providing a second used vessel comprising:

(a) a hull,

(b) an engine for the second vessel powering the hull of the second vessel, and

(c) a steerage system for the second vessel steering the second vessel;

3) retrofitting the first and second vessels by

(i) spanning a first frame between the vessels;

(ii) spanning a second frame between the vessels;

(iii) spacing the frames apart and connecting the frames to the vessels in a configuration that spaces the vessels apart;

(iv) connecting the first frame to the first vessel with a universal joint and to the second vessel with a hinged connection;

(v) connecting the second frame to the second vessel with a universal joint, and to the first vessel with a hinged connection;

(vi) extending each frame upwardly in an inverted u-shape, providing a space under the frame and in between the barges, enabling a marine vessel to position in between the barges and under the frames; and

(vii) rigging each frame with a winch and a winch line for enabling the combination of vessels and frames to lift objects from a position generally under the frames and in between the vessels; and

4) providing an overall bridge controller computer operatively connected to each of the engine for the first vessel, steerage system for the first vessel, engine for the second vessel, and steerage system for the second vessel, wherein the overall bridge controller computer can directly or indirectly control one or more of the following:

(i) engine for the first vessel,

(ii) steerage system for the first vessel,

(iii) engine for the second vessel, and

(iv) steerage system for the second vessel.

47. A method creating an overall structurally integrated vessel from two existing vessel comprising the steps of:

1) providing a first used vessel, the first vessel comprising:

(a) a hull,

(b) a plurality of engines for the first vessel, each powering the hull of the first vessel, and

(c) a plurality of steerage systems for the first vessel, each steering the first vessel;

2) providing a second used vessel comprising:

(a) a hull,

(b) a plurality of engines for the second vessel, each powering the hull of the second vessel, and

(c) a plurality of steerage systems for the second vessel, each steering the second vessel,

3) retrofitting the first and second vessels by

(i) spanning a first frame between the vessels;

(ii) spanning a second frame between the vessels;

(iii) spacing the frames apart and connecting the frames to the vessels in a configuration that spaces the vessels apart;

(iv) connecting the first frame to the first vessel with a universal joint and to the second vessel with a hinged connection;

(v) connecting the second frame to the second vessel with a universal joint, and to the first vessel with a hinged connection;

(vi) extending each frame upwardly in an inverted u-shape, providing a space under the frame and in between the barges, enabling a marine vessel to position in between the barges and under the frames; and

(vii) rigging each frame with a winch and a winch line for enabling the combination of vessels and frames to lift objects from a position generally under the frames and in between the vessels; and

4) providing an overall bridge controller computer operatively connected to each of the engines for the first vessel, steerage systems for the first vessel, engines for the second vessel, and steerage systems for the second vessel, wherein the overall bridge controller computer can directly or indirectly control the following:

(i) one or more of the engines for the first vessel,

(ii) one of more of the steerage systems for the first vessel,

(iii) one or more of the engines for the second vessel, and

(iv) one or more of the steerage systems for the second vessel.

[0058] The following is a list of parts and materials suitable for use in the present invention.

PARTS LIST

Part Number	Description

Part Number	Description
10	marine lifting apparatus
11	vessel/hull
12	vessel/hull
13	frame
14	frame
15	universal joint
16	hinge
17	universal joint
18	hinge
19	deck beam/interface
20	deck beam/interface
21	area
22	dimension
23	dimension
24	water surface
25	clearance above water
26	clearance above hull deck
27	center truss section
28	smaller truss section
29	smaller truss section
30	hull deck
31	pinned connection
32	pinned connection
33	sunken boat
34	seabed
35	maximum deck elevation
40	lifting hook

Part Number	Description
41	lifting line
42	winch
43	sheave
44	sheave
45	sheave
46	dynamically positioned vessel
47	dynamically positioned vessel
48	deck
49	pilot house
50	bow
51	stern
52	deck
53	pilot house
54	bow
55	stern
56	load spreader platform
57	load spreader platform
58	load spreader platform
59	load spreader platform
60	load area
62	traction winch
64	first drum
66	second drum
68	third drum
70	spreader bar/rigging
100	dynamically positioned vessel
110	dynamically positioned vessel

Part Number	Description
115	gantry structurally combining vessels
120	deck
130	pilot house
134	secondary control building
140	bow
150	stern
160	deck
170	pilot house
180	bow
190	stern
200	universal load spreader platform/retrofit base
210	plurality of connection plates
220	surface
230	plurality of connection points for spreader gantry
300	universal load spreader platform/retrofit base
310	plurality of connection plates
320	surface
330	plurality of connection points for spreader gantry
400	overall DP Controller computer
410	structurally integrated and combined vessel
420	bridge controller computer
500	DP controlled thruster
502	position referencing system
504	DP controller
506	engine
507	rudder steerage
508	vessel bridge controller

Part Number	Description
510	DP controlled thruster
512	position referencing system
514	DP controller
516	engine
517	rudder steerage
518	vessel bridge controller
520	DP controlled thruster
522	position referencing system
524	DP controller
526	engine
527	rudder steerage
528	vessel bridge controller
530	DP controlled thruster
532	position referencing system
534	DP controller
536	engine
537	rudder steerage
538	vessel bridge controller
600	DP controlled thruster
602	position referencing system
604	DP controller
606	engine
607	rudder steerage
608	vessel bridge controller
610	DP controlled thruster
612	position referencing system
614	DP controller

Part Number	Description
616	engine
617	rudder steerage
618	vessel bridge controller
620	DP controlled thruster
622	position referencing system
624	DP controller
626	engine
627	rudder steerage
628	vessel bridge controller
630	DP controlled thruster
632	position referencing system
634	DP controller
636	engine
637	rudder steerage
638	vessel bridge controller

[0059] All measurements disclosed herein are at standard temperature and pressure, at sea level on Earth, unless indicated otherwise. All materials used or intended to be used in a human being are biocompatible, unless indicated otherwise.

[0060] The foregoing embodiments are presented by way of example only; the scope of the present invention is to be limited only by the following claims.

Patentkrav

1. En metode til løft af en pakke i et marinemiljø bestående af følgende trin:

a. første (11) og andet (12) fartøj;

b. udspænding af en første ramme (13) mellem fartøjerne (11,12);

c. udspænding af en anden ramme (14) mellem fartøjerne (11,12);

d. spatiering af rammerne (13, 14) og tilslutning af rammerne til fartøjerne (11, 12) i en konfiguration, der spatierer fartøjerne;

e. tilslutning af den første ramme (13) til det første fartøj (11) med et universalled (15) og til det andet fartøj (12) med et hængslet tilslutningspunkt (16);

f. tilslutning af den anden ramme (14) til det andet fartøj (12) med et universalled (15) og til det første fartøj (11) med et hængslet tilslutningspunkt (16);

g. udvidelse af hver ramme (13, 14) opad i en omvendt U-form, hvilket skaber et rum under rammen og imellem fartøjerne (11, 12), således at et marinefartøj kan placere sig mellem fartøjerne (11,12) og under rammerne (13, 14); og

h. rigning af hver ramme (13,14) med et spil (42) og en spilline (41), der skal muliggøre kombinationen af fartøjer (11, 12) og rammer (13, 14) til løft af genstande fra en position, der generelt befinder sig under rammerne (13, 14) og imellem fartøjerne (11, 12); og

hvori ét eller begge fartøjer positioneres dynamisk og er **karakteriseret ved, at** de dynamiske positioneringsfunktioner for hvert fartøj kontrolleres fra et enkelt styrehus (49).

2. Metoden bag patentkrav 1, hvori den første ramme (13) er en gitterkonstruktion, og/eller den anden ramme (14) er en gitterkonstruktion.

3. Metoden bag patentkrav 1 omfatter yderligere det trin, der består i at styre positionen for hvert fartøj med en elektronisk positioneringsenhed, og evt. det trin, der består i af styre positionen for hvert fartøj med en computer.

4. Metoden bag patentkrav 1, hvori det hængslede tilslutningspunkt (16) i trin "e" omfatter flere fæstede tilslutningspunkter.

5. Metoden bag patentkrav 1 omfatter yderligere det trin, der består i at udvide den første ramme (13), så den bliver langt bredere i den ene ende sammenlignet med den anden, og/eller det trin, der består i at udvide den anden ramme (14), så den bliver langt bredere i den ene ende sammenlignet med den anden.

6. Metoden bag patentkrav 3, hvori en enkelt computer styrer funktionerne for begge fartøjer (11, 12).

7. Metoden bag patentkrav 1, hvori de dynamiske positioneringsfunktioner for hvert fartøj (11, 12) styres af en enkelt styrmand, eller
hvori de dynamiske positioneringsfunktioner for mindst ét fartøj (11, 12) omfatter propelfunktioner, styrefunktioner og fremdrivningsfunktioner, eller

hvori de dynamiske positioneringsfunktioner for begge fartøjer (11, 12) omfatter propelfunktioner, styrefunktioner og fremdrivningsfunktioner.

8. Metoden bag patentkrav 1, hvori hvert fartøj er en arbejdsbåd (100, 110) med et bovparti (140) med et styrehus (130), et dækparti (160) bag styrehuset (130), én eller flere belastningsfordelingsplatforme (56, 57, 58, 59) fastgjort på dækpartiet (160), og hvori den første og den anden ramme (13, 14) er monteret på belastningsfordelingsplatformen (56, 57, 58, 59), eller

hvori hvert fartøj er en arbejdsbåd (100, 110) med et bovparti (130) med et styrehus (130), et dækparti (160) bag styrehuset (130), én eller flere belastningsfordelingsplatforme (56, 57, 58, 59) fastgjort på dækpartiet (160), og hvori den første og den anden ramme (13,14) er monteret på én eller flere af belastningsfordelingsplatformene (56, 57, 58, 59).

9. Metoden bag patentkrav 1, hvori spillinen (41) har en masse, der ligger under vand og mellem ca. -7,44 kg/m (minus fem (- 5,0) pund pr. fod) og 148,81 kg/m (plus (ethundrede +100,0 pund pr. fod)), eller

hvori spillinen (41) har en masse, der ligger under vand og mellem ca. -2,98 kg/m (minus to (-2,0) pund pr. fod) og 2,98 kg/m (plus to (+2,0) pund pr. fod), eller
hvori spillinen (41) har markant neutral flydeevne, eller
hvori spillinen (41) er fremstillet af et syntetisk materiale.

10. Metoden bag patentkrav 1, hvori spillene (42) er monteret på rammerne (13, 14) og yderligere omfatter det trin, der består i montering af en hydraulikenhed på en ramme ud for et spil og driver spillet med hydraulikenheden.

11. En løfteanordning til katamaranfartøjer omfattende:

a. første og andet fartøj, mindst hvert af fartøjerne er et dynamisk positioneret fartøj (46, 47);

b. en første ramme (13), der strækker sig mellem fartøjerne (46, 47);

c. en anden ramme (14), der strækker sig mellem fartøjerne (46, 47);

d. rammerne (13, 14), der spatieres og tilsluttes fartøjerne (46, 47) i en konfiguration, som spatierer fartøjerne fra hinanden;

e. den første ramme (13), der er tilsluttet det første fartøj (46) med et leddelt tilslutningspunkt, og til det andet fartøj med et hængslet tilslutningspunkt;

f. den anden ramme (14), der er tilsluttet det andet fartøj (47) med et leddelt tilslutningspunkt, og til det første fartøj med et hængslet tilslutningspunkt;

g. hver ramme (13, 14) udvides opad i en omvendt U-form, hvilket skaber et rum under rammen og imellem fartøjerne (46, 47), således at et marinefartøj kan placere sig mellem fartøjerne (46, 47) og under rammerne (46, 47);

h. spil (42) og spilliner (41) rigget til én eller flere af de omtalte rammer (13, 14);

i. en styreenhed til styring af de dynamiske positioneringsfunktioner for begge fartøjer fra et styrehus (49, 53, 130, 170) på et af fartøjerne (11, 12, 46, 47).

12. Løfteanordningen til katamaranfartøjer, som omtalt i patentkrav 11, hvori fartøjet (46, 49) har et bovparti (50) og et agterstævnparti (51), og styrehuset (49) er placeret på et agterstævnparti (51) tilhørende et af fartøjerne (46, 47), eller

hvori fartøjet (46, 47) har et bovparti (50) og et agterstævnparti (51), og det leddelte tilslutningspunkt er placeret imellem styrehuset (49) og det hængslede tilslutningspunkt.

13. Løfteanordningen til katamaranfartøjer, som omtalt i patentkrav 11, hvori styreanordningen er en computer.

14. Løfteanordningen til katamaranfartøjer, som omtalt i patentkrav 11, hvori hvert af fartøjerne (46, 47) har propel- og styrefunktioner, og hver af disse funktioner styres fra et af fartøjerne (46, 47), eller
hvori hvert af fartøjerne (46, 47) har et fremdrivningsfunktion og fremdrivningsfunktionen for hvert fartøj (46, 47) styres fra et af fartøjerne.

15. Løfteanordningen til katamaranfartøjer som omtalt i patentkrav 14, hvori hver af funktionerne styres fra styrehuset (49, 53), og/eller fremdrivningsfunktionen styres fra styrehuset (49, 53).

16. Løfteanordningen til katamaranfartøjer, som omtalt i patentkrav 11, hvori det omtalte fartøj (46, 47) er et fartøj af typen DP - 2.

17. Løfteanordningen til katamaranfartøjer, som omtalt i patentkrav 11, hvori hvert hængslet tilslutningspunkt ikke er et universalled (15).

18. Løfteanordningen til katamaranfartøjer, som omtalt i patentkrav 11, hvori hvert universalled (15) er ledinddelt, hvilket muliggør rotation omkring flere akser.

19. Løfteanordningen til katamaranfartøjer, som omtalt i patentkrav 11, hvori den første ramme (13) omfatter en gitterkonstruktion og/eller den anden ramme (14) omfatter en gitterkonstruktion.

20. Løfteanordningen til katamaranfartøjer, som omtalt i patentkrav 11, hvori hængslet omfatter flere fæstede tilslutningspunkter (210).

21. Løfteanordningen til katamaranfartøjer, som omtalt i patentkrav 11, hvori den første ramme (13) er meget bredere i den ene ende end i den anden, og/eller den anden ramme (14) er meget bredere i den ene ende end i den anden.

22. Løfteanordningen til katamaranfartøjer, som omtalt i patentkrav 11, hvori hvert fartøj (46, 47) har et styrehus (49, 53), et dæk (48, 52), en bov (50, 54) og en agterstævn (51, 55), og hvori hver af rammerne er fastgjort til fartøjerne imellem et styrehus (49, 53) og en agterstævn (51, 55).

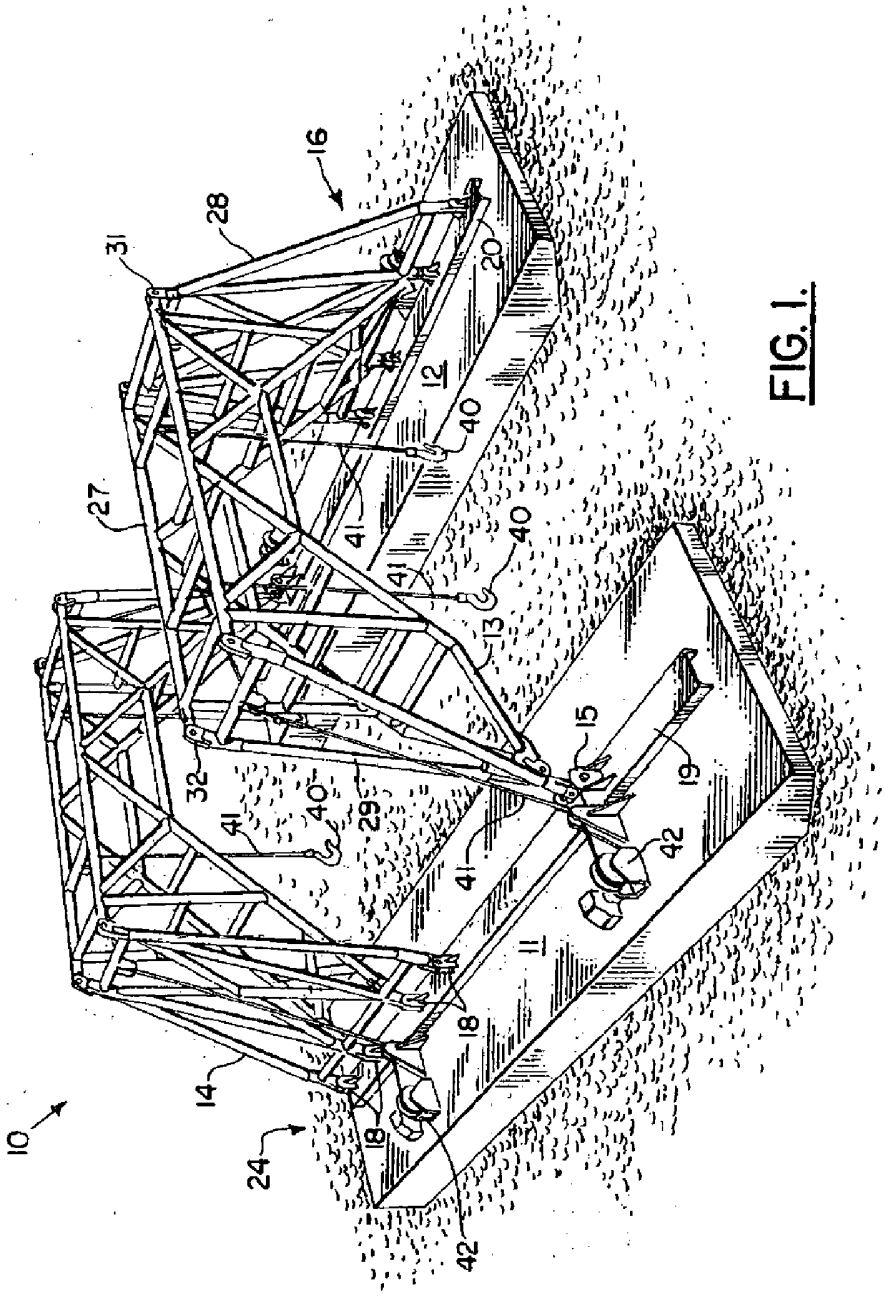

FIG. 1.

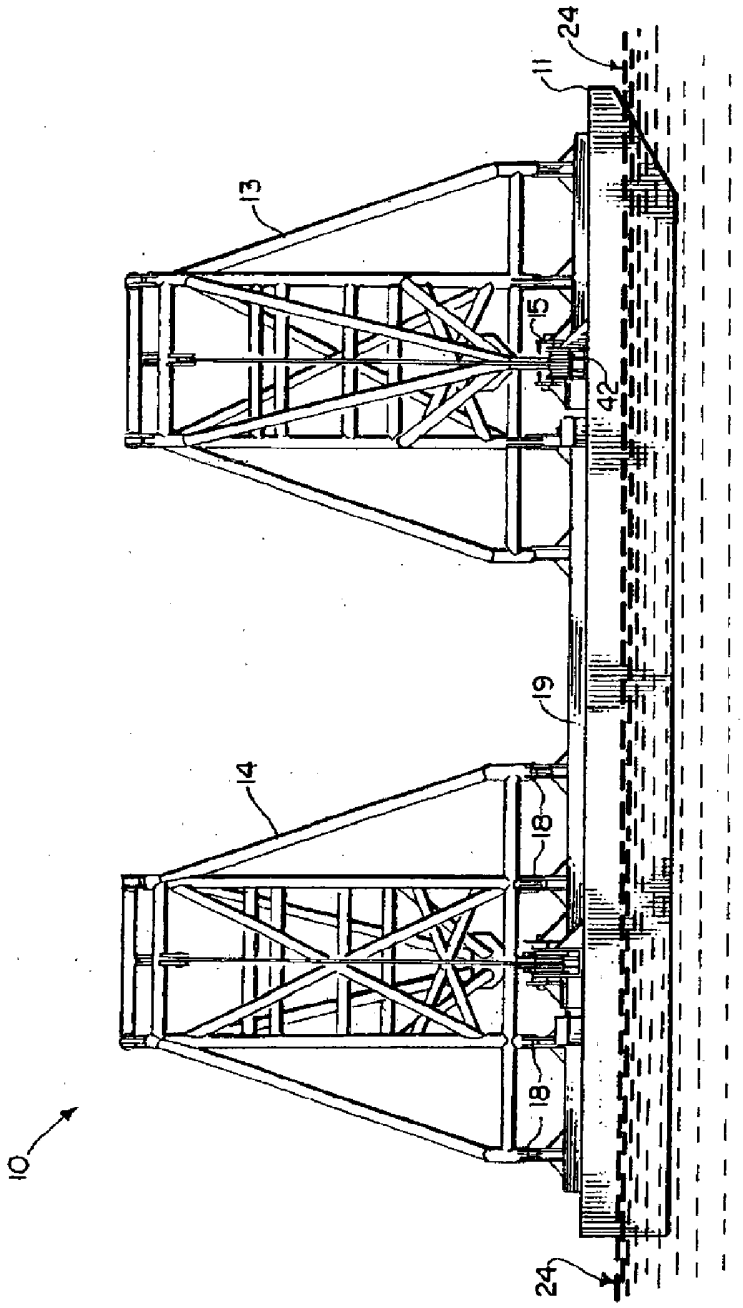

FIG. 2.

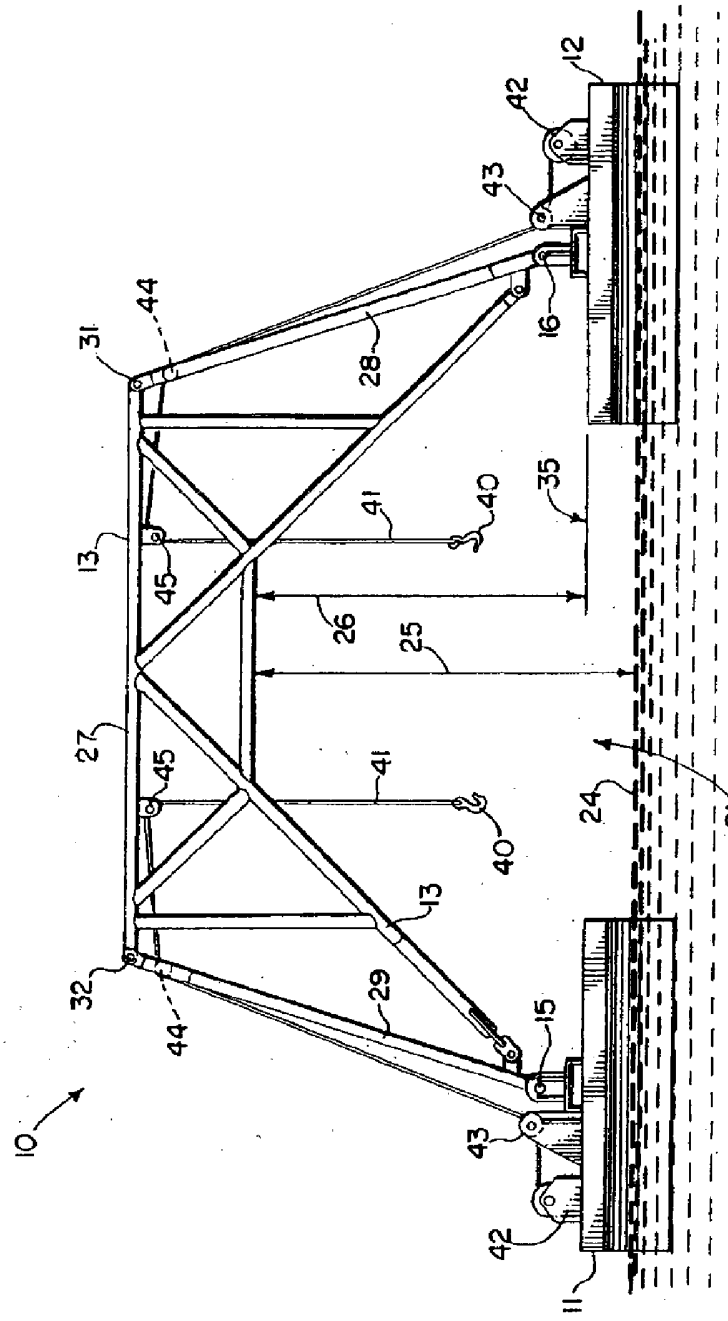

FIG. 3.

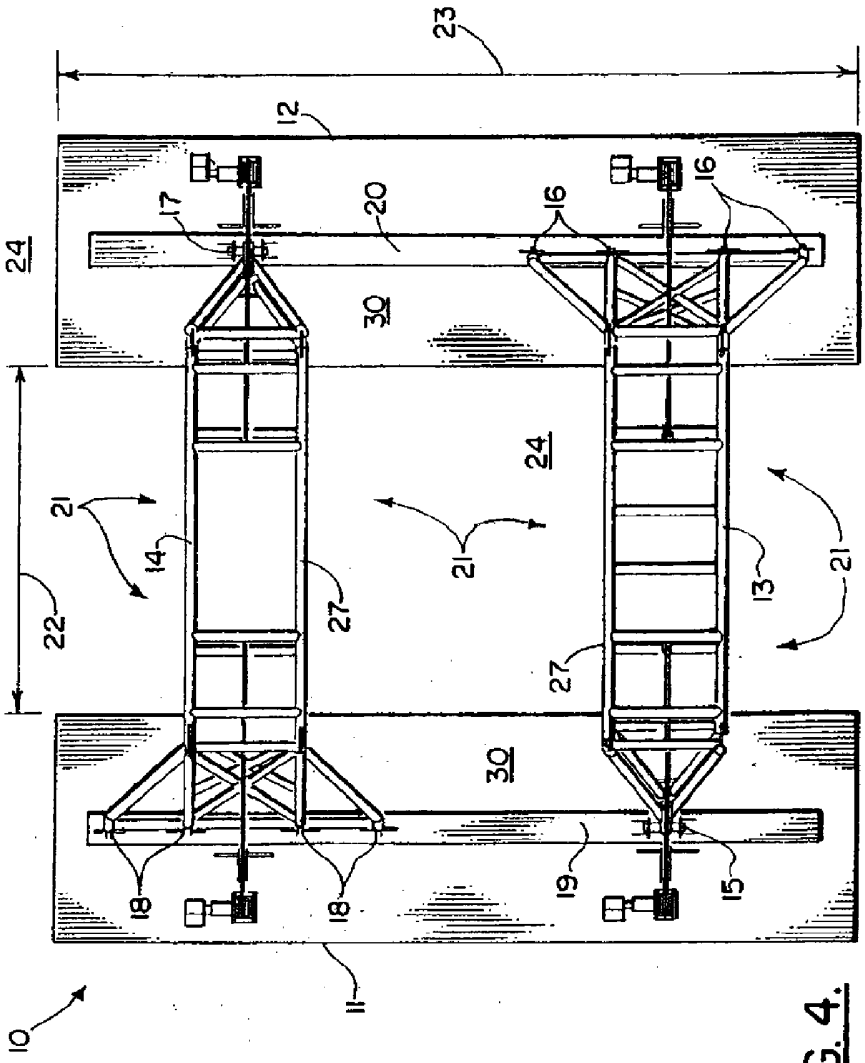

FIG. 4.

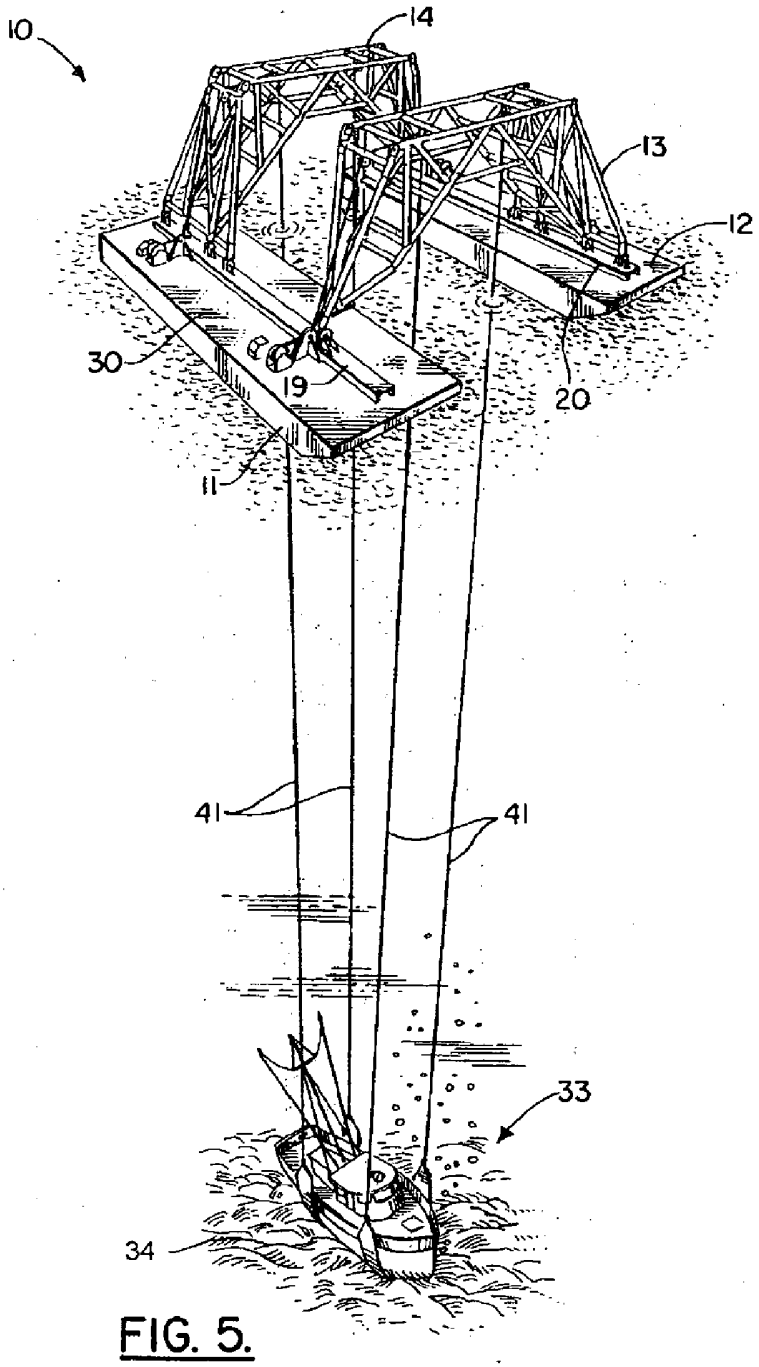

FIG. 5.

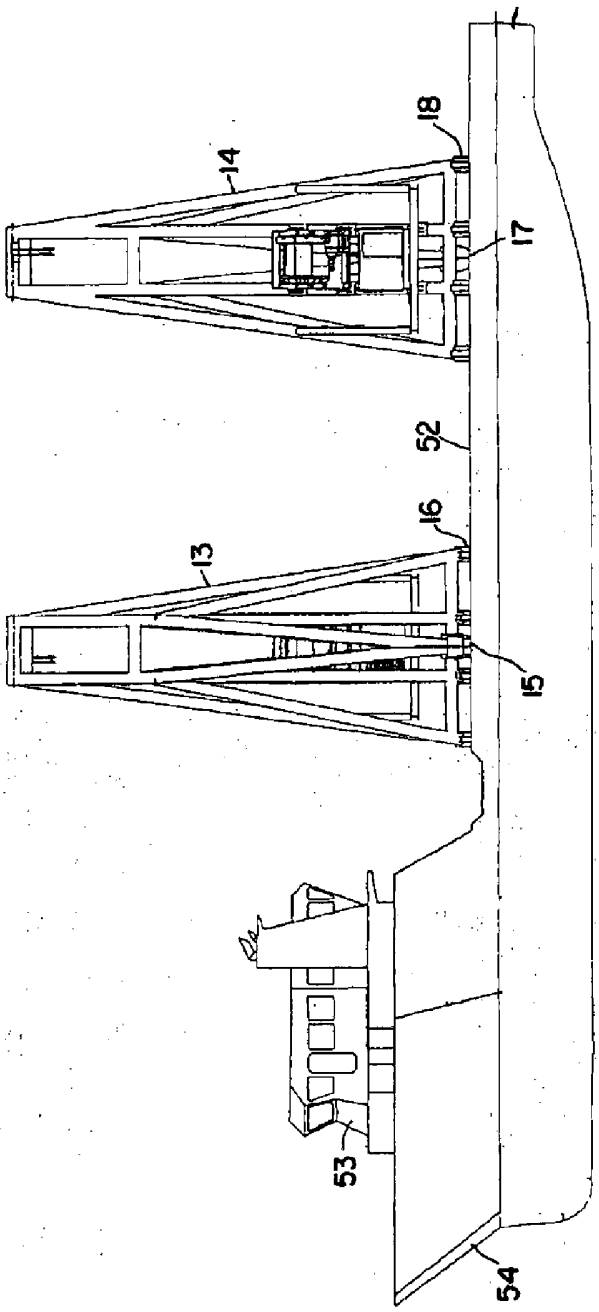

FIG. 6.

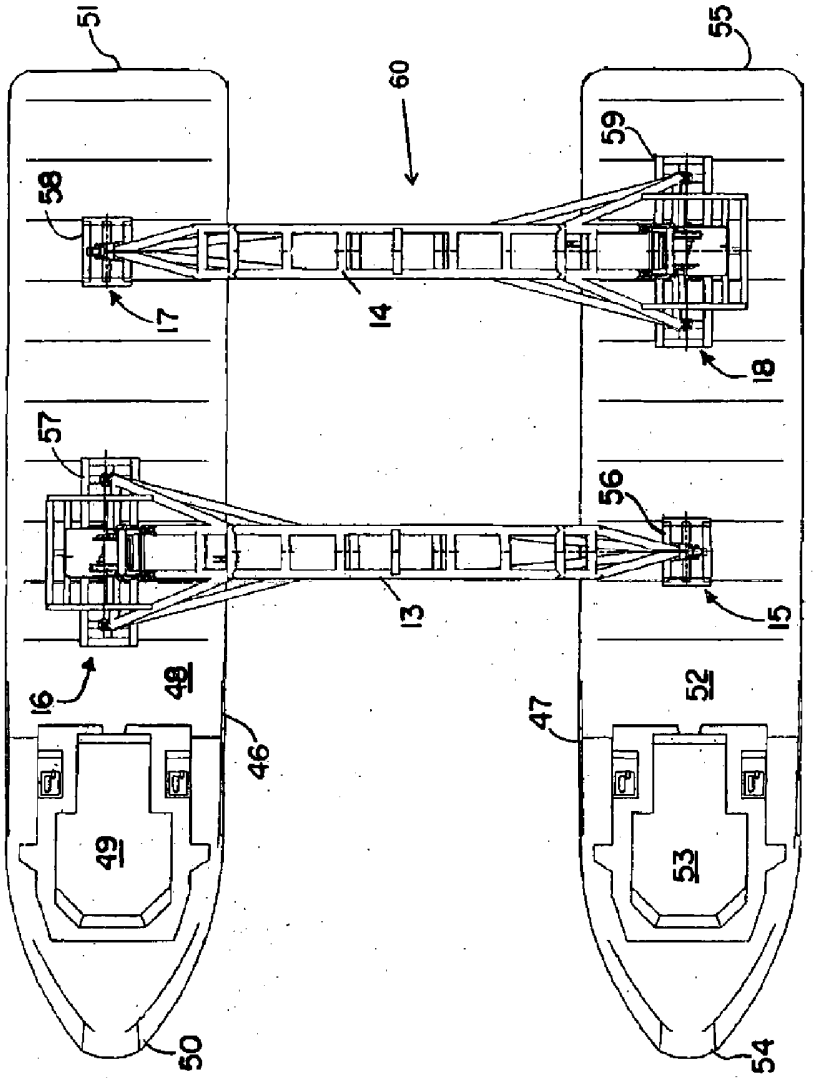

FIG. 7.

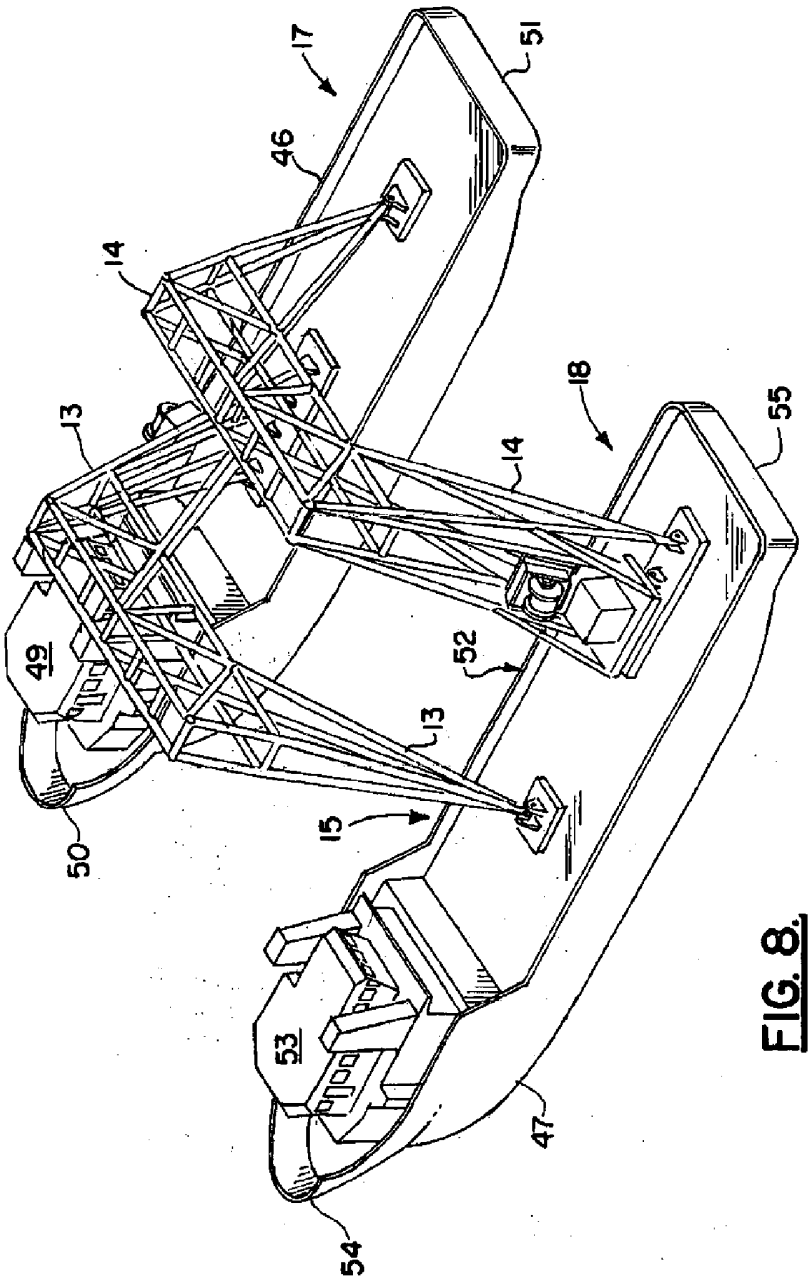

FIG. 8.

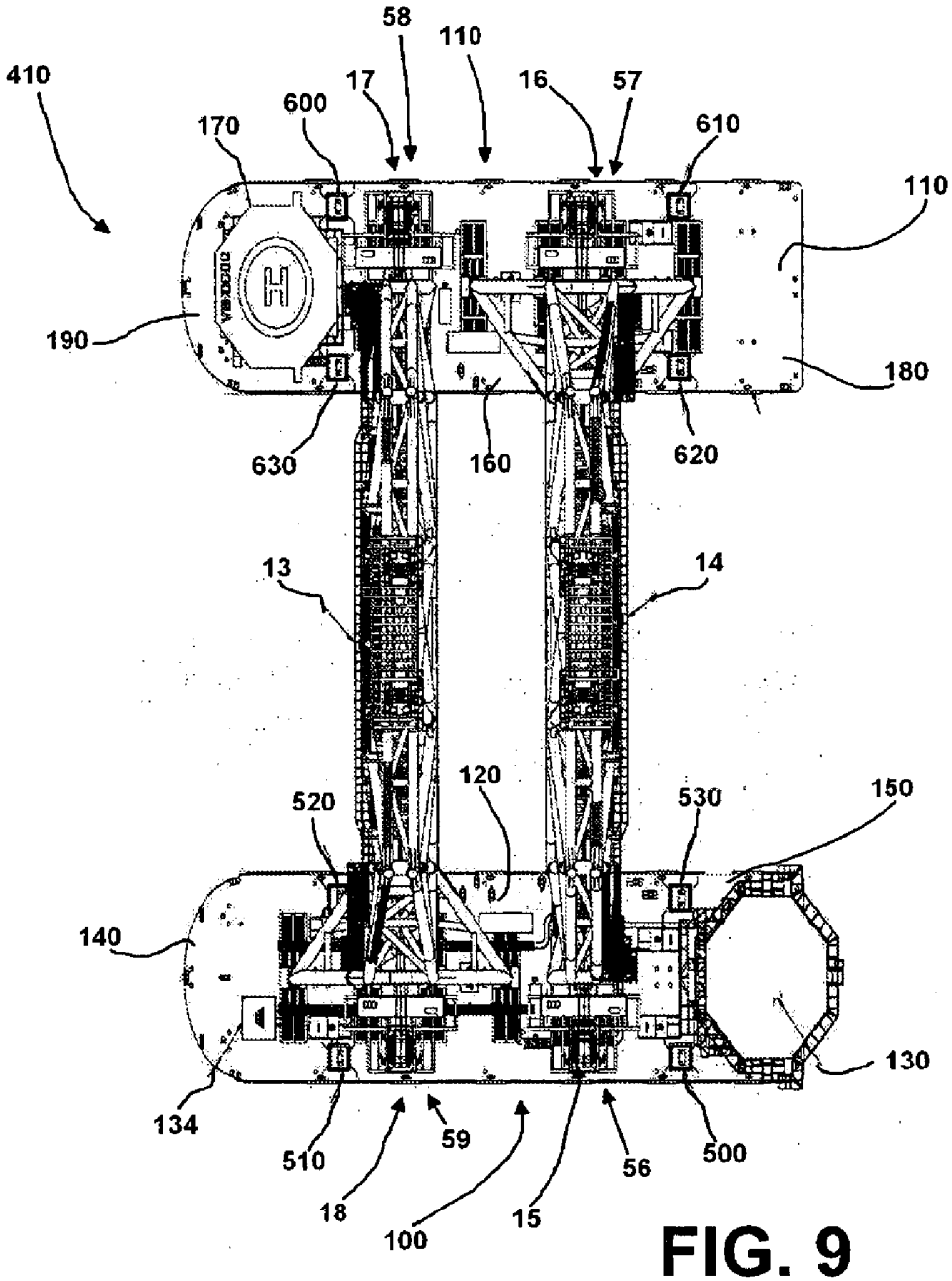
410
58
110
17
16
57
600
610
170
110
190
180
630
160
620
13
14
120
520
530
150
140
130
134
510
59
56
500
18
100
15

FIG. 9

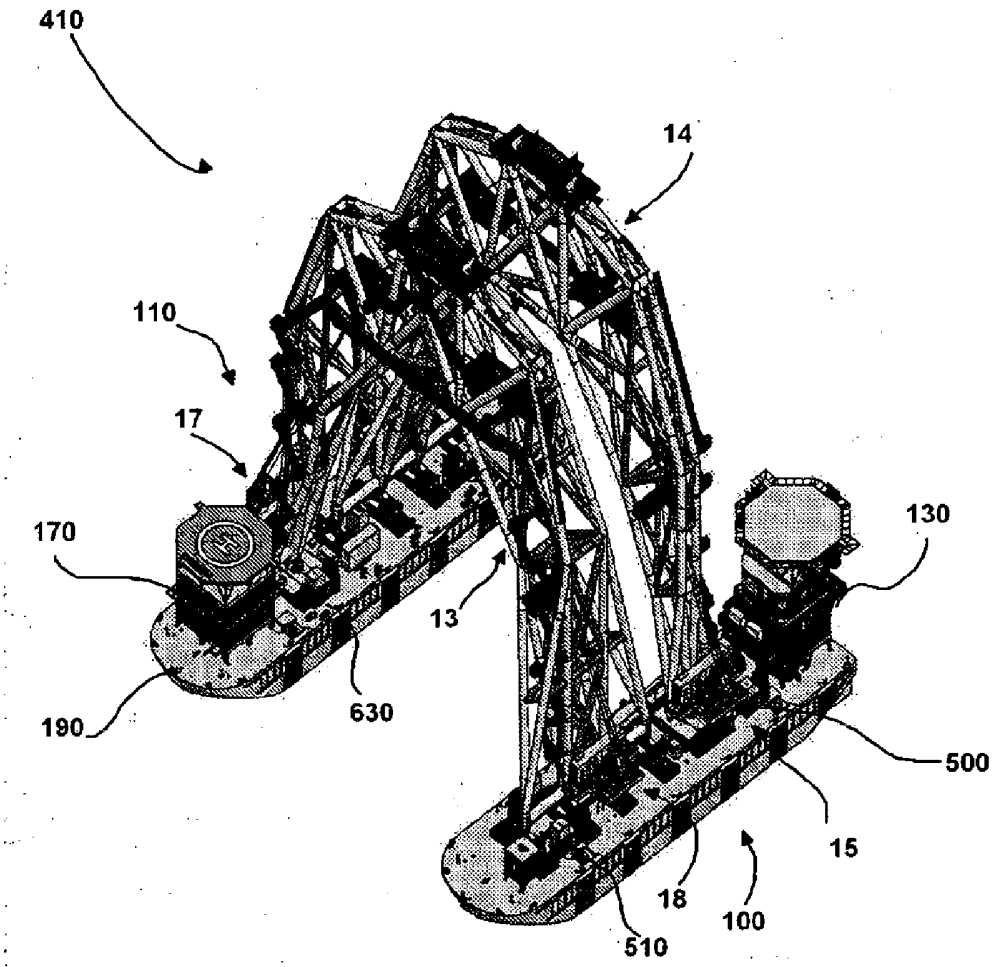

FIG. 10

FIG. 12

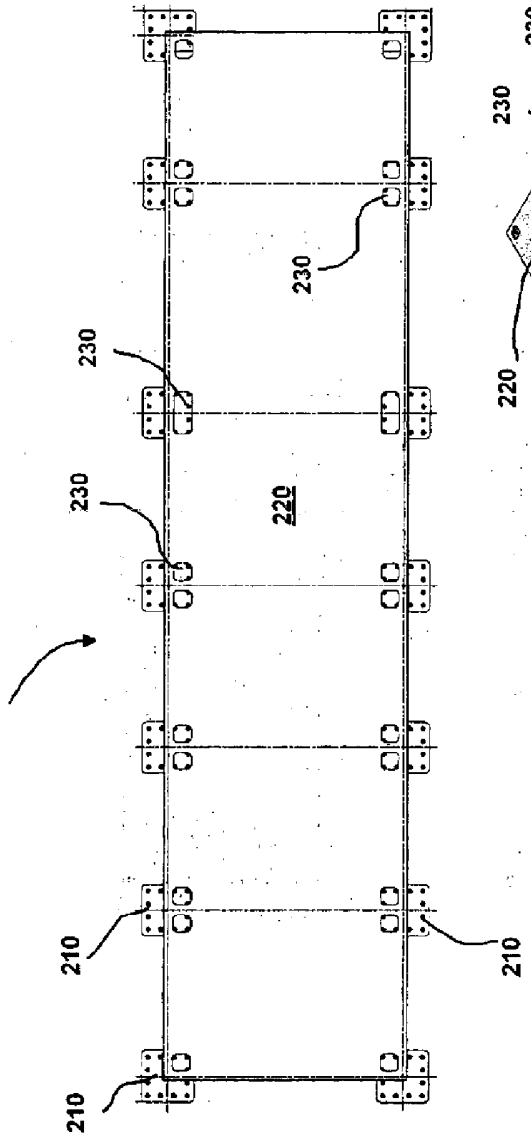

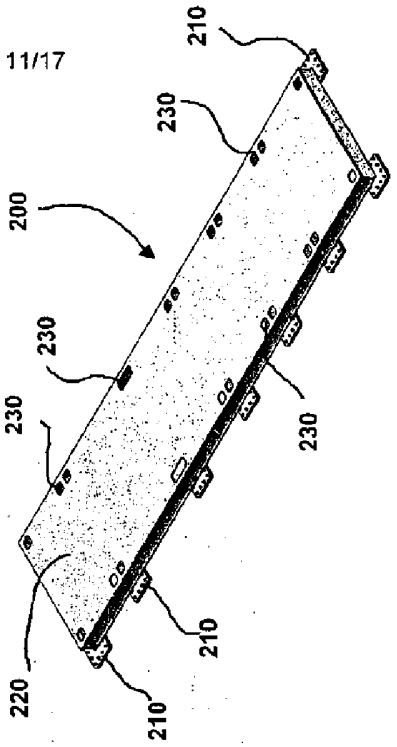

FIG. 11

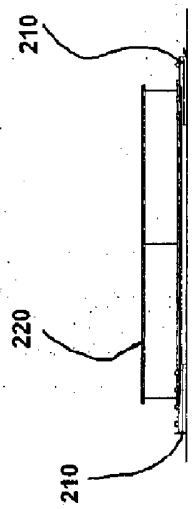

FIG. 13

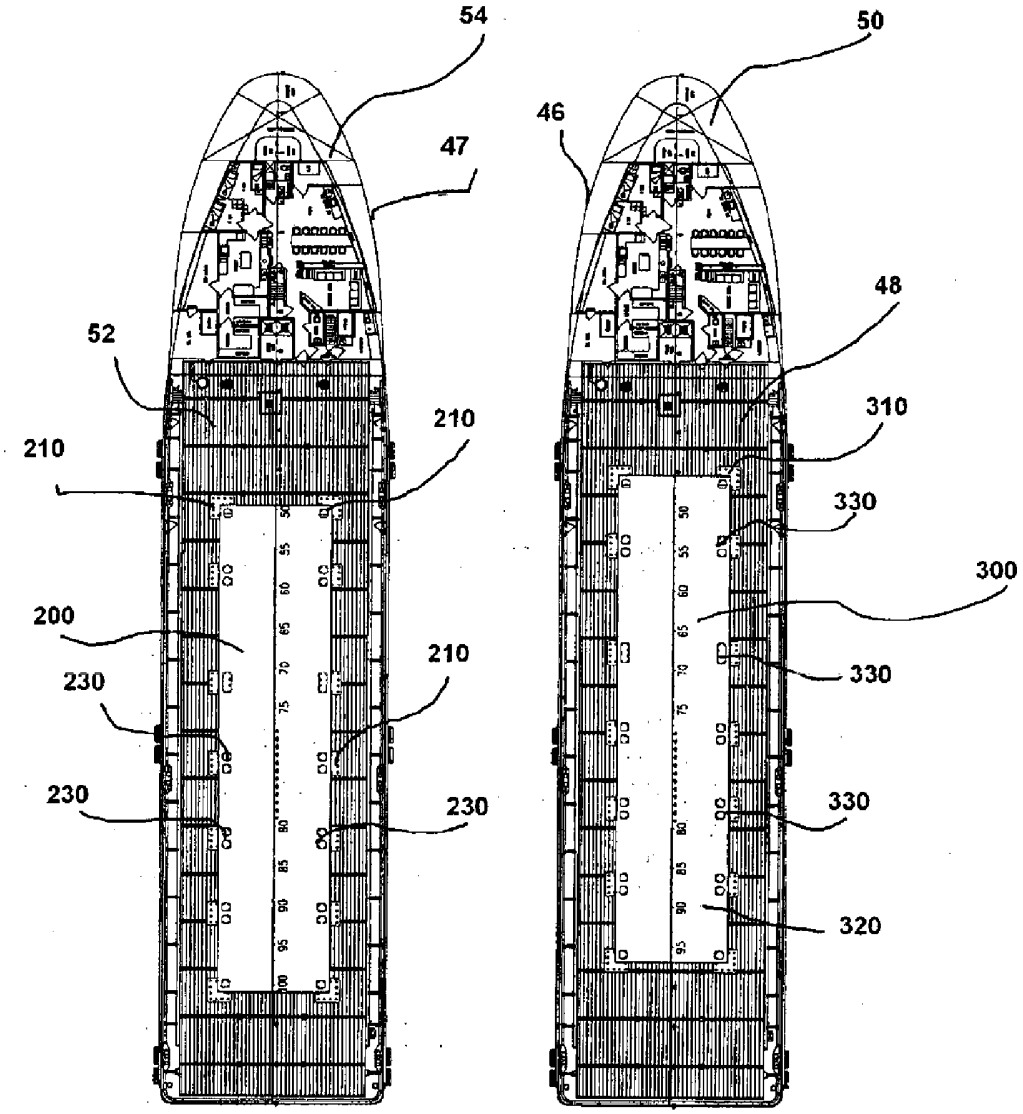
54
47
52
210
210
200
210
230
230
230
50
46
48
310
330
300
330
330
320

FIG. 14

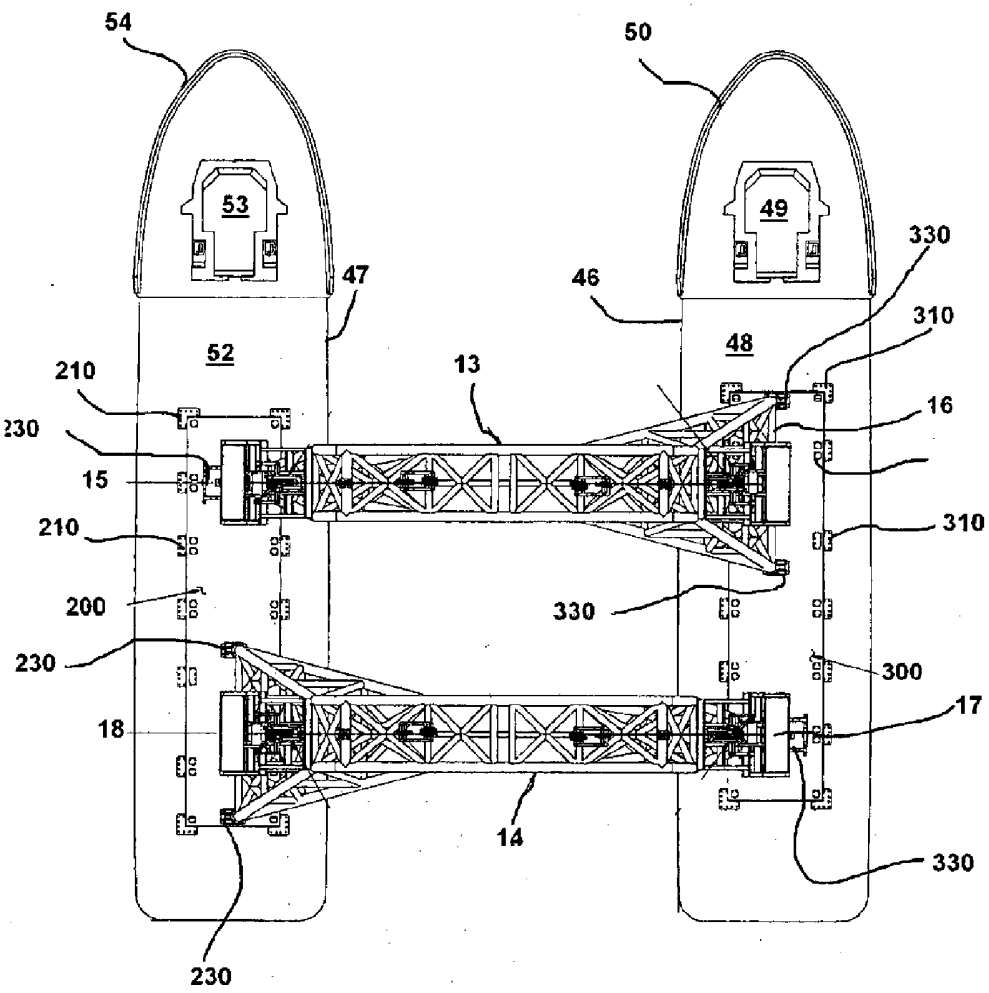
54
50
53
49
330
47
46
310
52
48
210
13
16
230
15
210
310
200
330
230
300
17
18
14
330
230

FIG. 15

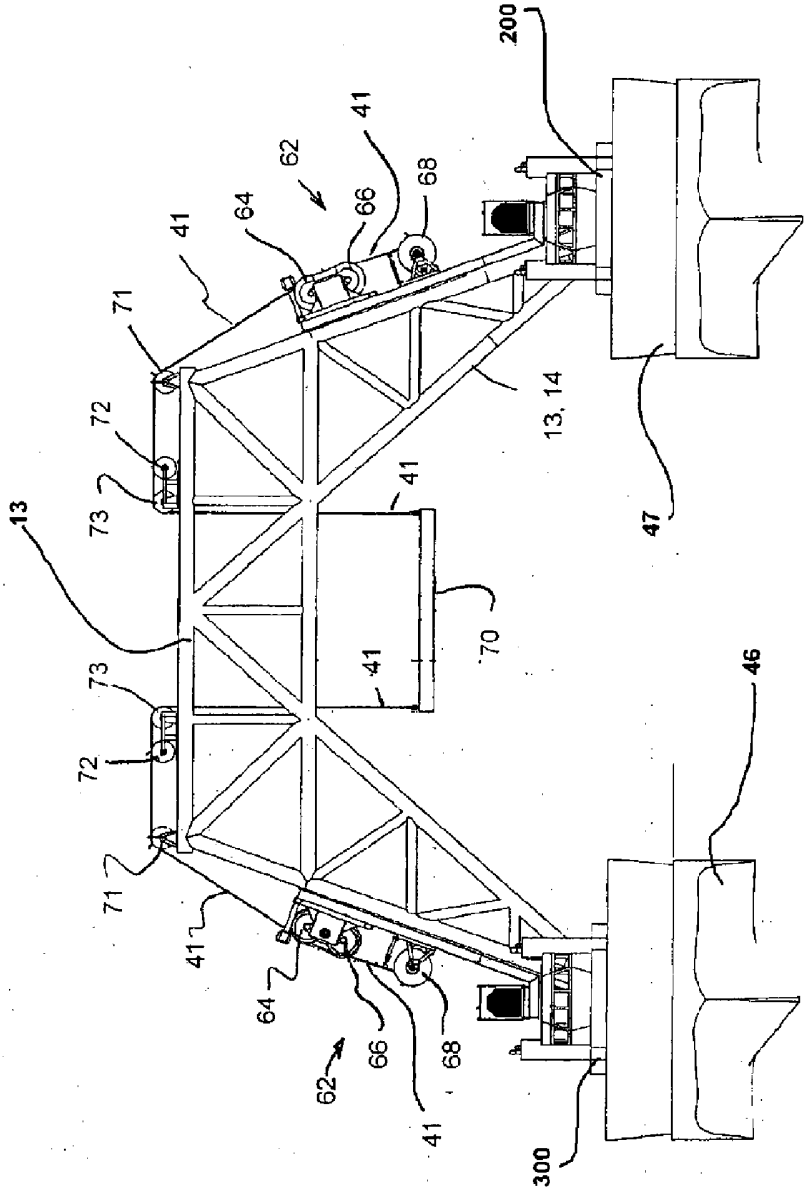
200
41
62
64
66
68
41
71
72
73
13
73
72
71
41
64
66
62
68
41
300
41
70
41
13, 14
47
46

FIG. 16

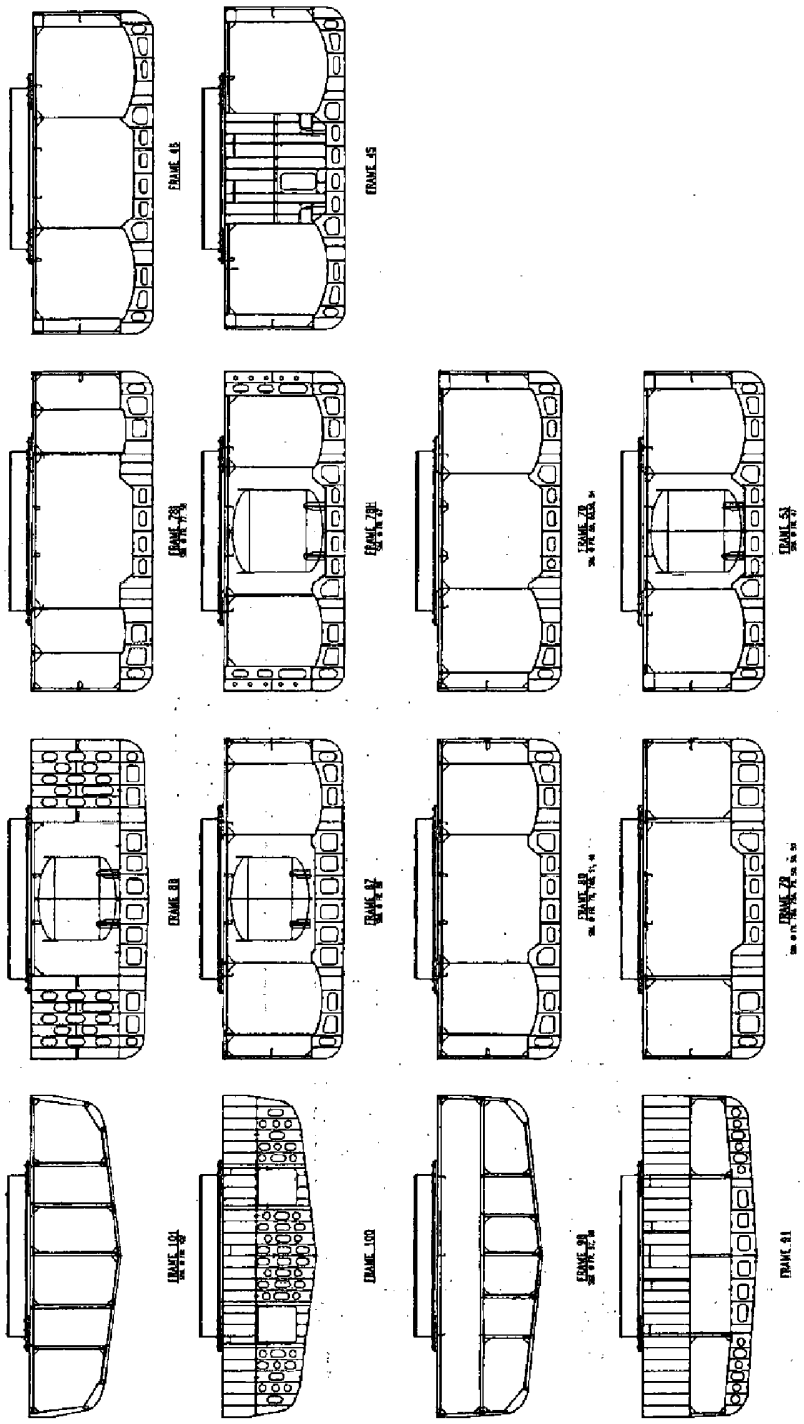

FIG. 17

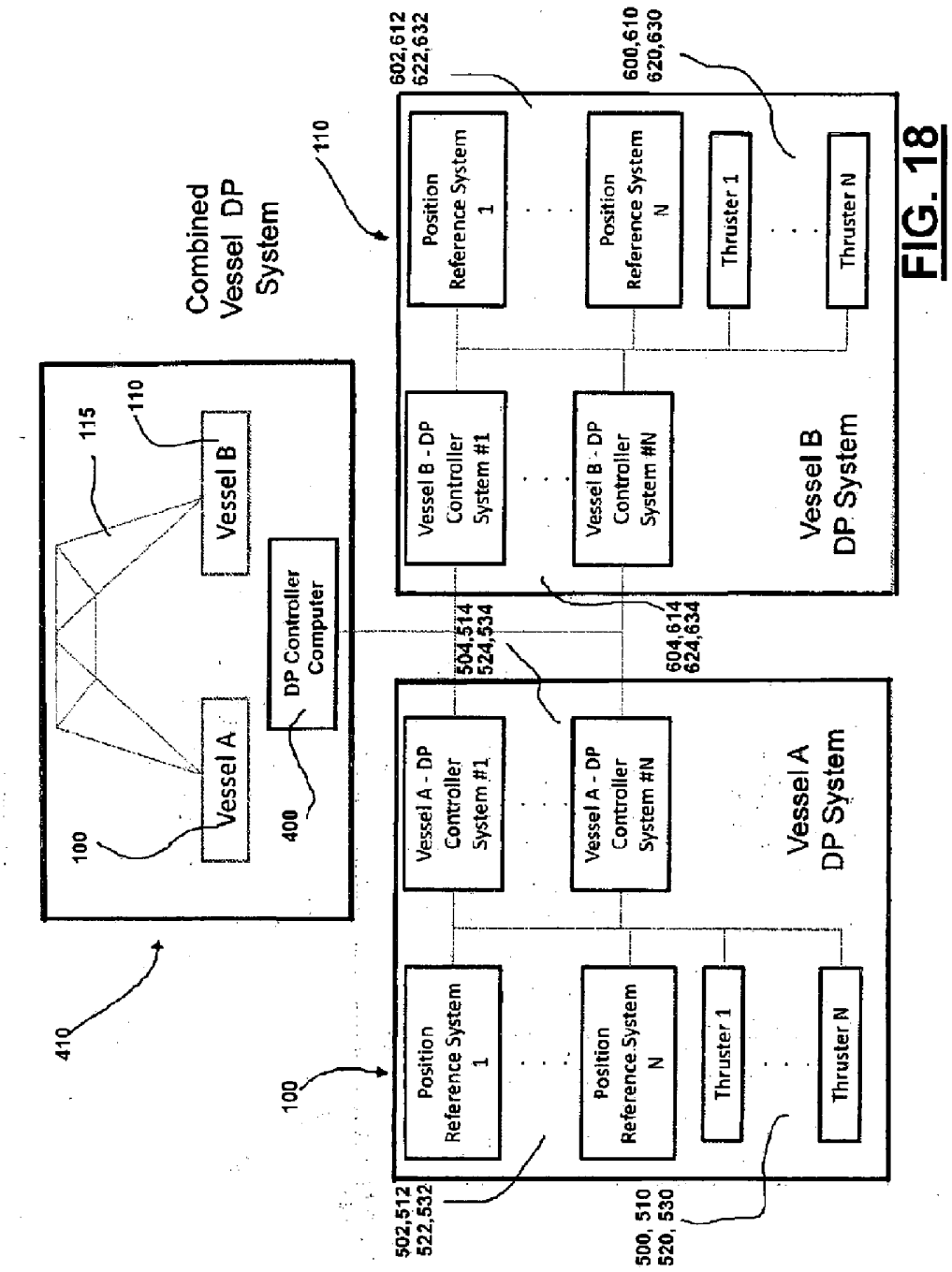
Combined Vessel DP System
110
115
110
Vessel B
Vessel A
DP Controller Computer
100
400
410
602,612
622,632
600,610
620,630
Position Reference System 1
Position Reference System N
Thruster 1
Thruster N
Vessel B - DP Controller System #1
Vessel B - DP Controller System #N
Vessel B DP System
604,614
624,634
504,514
524,534
Vessel A - DP Controller System #1
Vessel A - DP Controller System #N
Vessel A DP System
100
502,512
522,532
500, 510
520, 530

FIG. 18

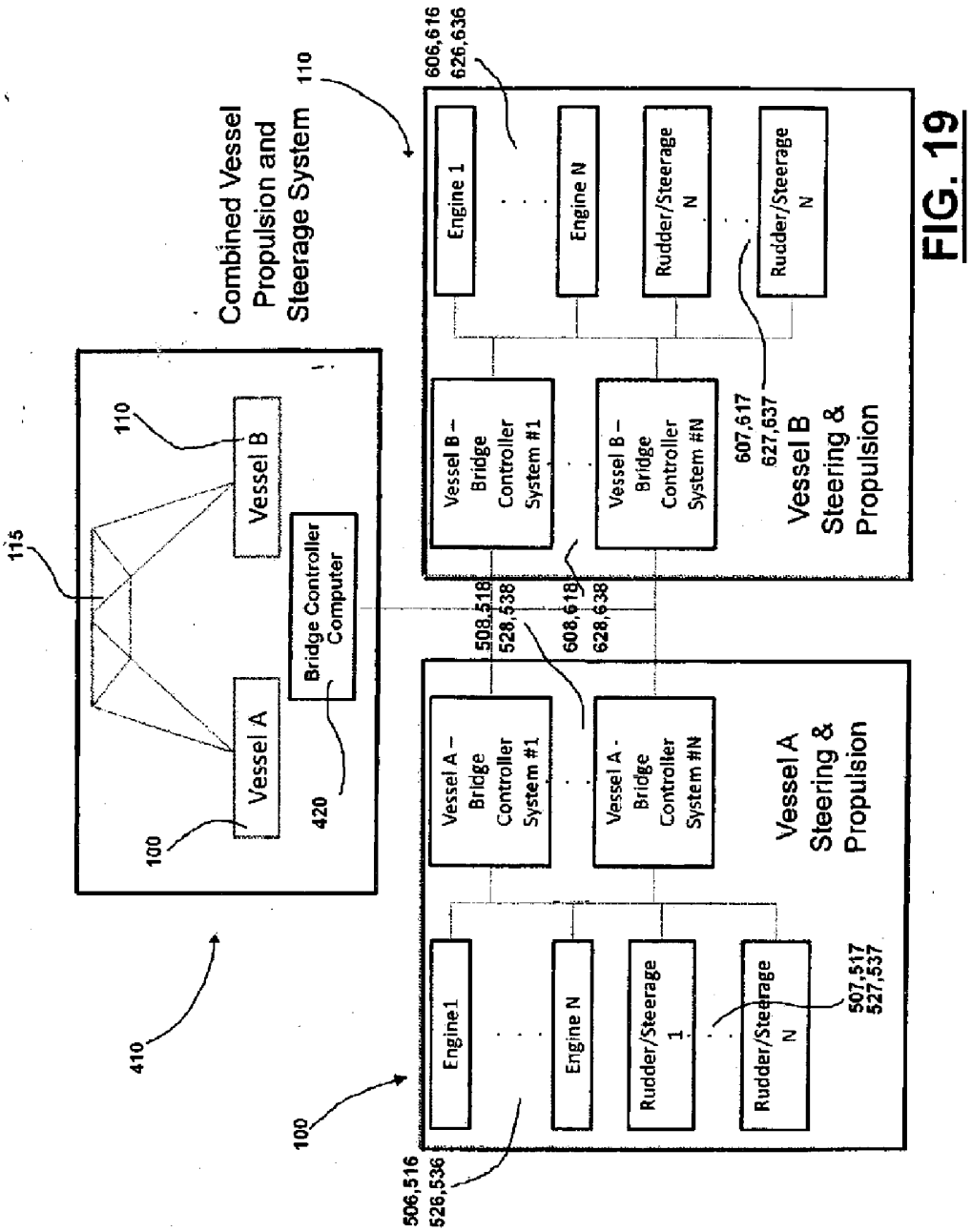
Combined Vessel Propulsion and Steerage System
110
606,616
626,636
Engine 1
Engine N
Rudder/Steerage N
Rudder/Steerage N
Vessel B – Bridge Controller System #1
Vessel B – Bridge Controller System #N
607,617
627,637
Vessel B Steering & Propulsion
115
110
Vessel B
Bridge Controller Computer
Vessel A
100
420
509,518
528,538
608,618
628,638
Vessel A – Bridge Controller System #1
Vessel A - Bridge Controller System #N
Vessel A Steering & Propulsion
Engine1
Engine N
Rudder/Steerage 1
Rudder/Steerage N
507,517
527,537
410
100
506,516
526,536

FIG. 19